Accofluor A/S

PTFE Worldwide – Made in Denmark

product index

General technical information 2

Piston seals 18

Rod seals 86

Wipers 143

Guide Rings 191

0 - rings 206

X - rings 254

Back-up rings 267

Radial lip seals, swivel seals, etc 272

Regarding the great variety of practice applications, please ask our Customer Service Department for a catalogue of any missing seal types and dimensions.

product index

	Page
Warranty	2
Materials (sealing elements)	3
Media resistance of some basic materials	4
Assembly area	12
Modern design of open grooves	13
General assembly hints	14
Guidelines for assembly of PTFE piston seals	14
Guidelines for assembly of PTFE rod seals	15
Storage of rubber products	15,16

Regarding the great variety of practice applications please ask our customer service department personally for missing types or dimensions

General Technical Information

WARRANTY

This sealing catalogue is based on decades of experience and knowledge in sealing hydraulics. Nevertheless, differences in the text or editorial misprints cannot be excluded. We would therefore recommend you to thorougly check the measured specifications indicated in our catalogue, the compatibility of the hydraulic liquids to be applied as well as the technical demands of your sealing applications. The part number in the catalouge is more or less what the market can provide, but please note that the part number in the catalogue does not match what we have in stock, so please make sure that it is an Accofluor stock item.
The ACCOFLUOR TECHNICAL DEPARTMENT offers support and gives answers to all your questions regarding the concept of your sealing system. If required, please contact our technical and administrative customer support.

ACCOFLUOR A/S
Sealing systems
Central Office
Phone international +45 491 10030
Fax international +45 491 10039
E-mail info@accofluor.com
www.accofluor.com

The function of hydraulic systems depends to a great extent on the mutual cooperation between the design and the seals applied in the hydraulic devices. The applications can be quite similar but they are influenced to a high degree by the specific working conditions.

Due to the high demands on the motive power engineering and control technique the demands on the seals have also increased over the last few years. The users should therefore consider the various characteristic quantities of the sealing element when choosing the sealing and take into account the specific influence factors on the sealing process and their condition during application.

ACCOFLUOR Seals and Systems are designed for use at middle, high and highest pressures and have proven successful in practice under the most difficult operating conditions such as for example in mining and mobile hydraulics. They are distinguishing themselves by a maximum of operating safety and ease of assembly.

ACCOFLUOR
Sealing systems offers the user a number of advantages, for example :

- an extensive and application-oriented type range
- special technical and practice-compatible solutions
- high quality standard
- low assembly costs
- high service life due to specially developed materials

General Technical Information

Materials (sealing elements)

Materials of construction meant for use in sealing and guiding applications are expected to have outstanding mechanical and chemical characteristics.

1. Low permanent deformation (good compression set behaviour)
2. High abrasion resistance and low wear
3. Good temperature stability
4. Compatibility in most of the pressure medium as used in hydralics.
5. Excellent mechanical characteristics.

Materials used in manufacture of ACCOFLUOR sealing systems undergo constant and stringent quality checks. This assists in enhancing the function and service life of the seals. ACCOFLUOR seals are regularly produced from one or more of the following materials:

Fiber elastomer combinations

These materials are used in very demanding application environments. They display good pressure, abrasion and flow resistance and good anti stick slip behaviour.

Elastomer blends from natural or synthetic rubber

These materials are used in the manufacture of sealing elements that give high elasticity and ease of assembly

Flexible thermoplastics

These materials (polyurethane, polyester elastomers) are used in sealing elements, wipers and back-up rings with very high elasticity, abrasion resistance and compressive strength.

Rigid thermoplastics

Highly resistant materials (polyamide, polyacetal) are used in the manufacture of sliding elements and back-up rings.

Fluorine containing thermoplastics with and without reinforcements

This group mainly comprises of PTFE and related compounds. Seals, wipers and guides manufactured from these materials primarily relate to applications that require low friction and high resistance and stability.

Thermosetting plastics

These composites (phenolic, polyester resins and fabrics or polyester fiber) are used in peripheral components of sealing systems such as supporting components and strip material.

General Technical Informations

Media resistance of some basic materials

	NBR	MVQ	FPM	EPDM	PU	PTFE
Acetaldehyde	- -	- -	- -	+	- -	++
Acetone	- -	O	- -	++	- -	++
Acetylene	++	++	++	++	++	++
Acrylonitrile	- -	O	- -	- -	- -	++
Ethyl ester of acrzlic acid	- -	O	- -	O	- -	++
Adipic acid aqueous	++	+	++	++	++	++
Ethane	++	O	++	- -	++	++
Athanolamine	O	O	- -	++	- -	++
Essentials (Ethereal Oils)	+	- -	+	- -	+	++
Ethyl Acetate	- -	- -	- -	O	- -	++
Ethyl Acrylate	- -	O	- -	O	- -	++
Ethyl Alcohol 20° C	+	+	+	++	+	++
Ethyl Alcohol 50° C	O	O	O	++	- -	++
Ethyl Benzene	- -	- -	+	- -	- -	++
Ethyl Cellulose	++	x	- -	+	x	++
Ethyl Chloride	O	- -	+	- -	- -	++
Ethylene	+	x	+	x	x	++
Ethylene Bromide	O	- -	+	- -	- -	++
Ethylene Chlorhydrin	- -	x	+	x	x	++
Ethylene Chloride	- -	- -	+	- -	- -	++
Ethylene Diamine	+	O	- -	++	- -	++
Ethylene Dichloride	- -	- -	+	- -	- -	++
Ethylene Glycol	++	++	++	++	+	++
Ethylene Oxide	O	- -	- -	O	x	++
Ethylene Silicate	++	+	++	x	++	++
Potassium Hydroxide	+	O	O	++	- -	++
SodiumHydroxide	+	O	O	++	- -	++
Accumulator acid	+	O	++	++	- -	++
Alum (aqua)	+	+	++	++	+	++
Aluminium Chloride	+	+	++	++	x	++
Aluminium Fluoride	+	+	++	++	x	++
Aluminium Sulphate	+	++	++	++	O	++
Formic Acid	- -	O	- -	+	O	++
Ammonia, gaseous, hot	O	O	O	+	- -	++
Ammonia, gaseous, cold	+	+	O	++	- -	++
Ammonia aqueous	+	O	O	++	- -	++
Ammonium Chloride aqueous	++	++	++	++	O	++
Ammonium Fluoride aqueous	++	x	++	++	O	++
Ammonium Carbonate aqueous	+	+	+	++	- -	++
Ammonium Nitrate aqueous	+	+	++	++	O	++
Ammonium Phosphate aqueous	++	++	++	++	- -	++
Ammonium Sulphate aqueous	++	+	++	++	O	++
Ammonium Sulphide aqueous	++	+	++	++	O	++
Amyl Acetate	- -	- -	- -	+	- -	++
Amyl Alcohol	+	- -	+	+	O	++
Aniline	- -	O	++	O	- -	++
Aniline Chlorhydrate	+	+	++	+	- -	++
Aniline Dye	- -	x	++	+	x	++
Anisole	- -	x	x	x	- -	++
Cyclohexanone	- -	- -	- -	O	- -	++
Antimony Chloride aqueous	++	++	++	++	- -	++
Antimony Chloride (dehydrated)	++	++	++	++	- -	++
Malic acid	++	++	++	++	O	++
ASTM Fuel No. 1	++	- -	++	x	x	++
ASTM Fuel No. 2	O	- -	++	x	x	++
ASTM Fuel No. 3	- -	- -	+	x	x	++
ASTM Oil No. 1	++	+	++	- -	++	++
ASTM Oil No. 2	++	+	++	- -	++	++

++ = highly resistant; + = resistant; O = restricted resistant; - = restricted resistant to none resistant; - - = none restistant; x = not tested

General Technical Informations

Media resistance of some basic materials

	NBR	MVQ	FPM	EPDM	PU	PTFE
ASTM Oil No. 3	+	O	++	- -	+	++
ATE-Blue Brake Fluid	- -	O	O	x	x	++
Barium Chloride	++	++	++	++	x	++
Barium Salts aqueous	++	++	++	++	O	++
Cotton Oil	++	+	++	- -	++	++
BC 48 (Drilling Oil)	+	x	++	x	x	++
Benzaldehyde	- -	- -	- -	+	x	++
Fuel	++	- -	++	- -	++	++
Fuel-Benzene-Ethanol 50/30/20	- -	- -	+	- -	- -	++
Fuel-Benzene-Mix 80/20	O	- -	+	- -	+	++
Fuel-Benzene-Mix 70/30	O	- -	+	- -	+	++
Fuel-Benzene-Mix 60/40	- -	- -	+	- -	O	++
Fuel-Benzene-Mix 50/50	- -	- -	+	- -	O	++
Benzene	- -	- -	O	- -	- -	++
Benzyl Alcohol	- -	+	++	++	- -	++
Benzyl Chloride	- -	x	+	x	x	++
Succinic Acid aqueous	+	x	+	+	- -	++
Beer	++	++	++	++	++	++
Bitumen	+	O	++	x	+	++
Hydrocyanic Acid	+	+	++	+	x	++
Lead Acetate aqueous	++	x	x	++	- -	++
Bleaching Lye	- -	x	++	++	- -	++
Lead Nitrate aqueous	++	++	++	++	O	++
Borax (aqua)	++	++	++	++	+	++
Boric acid aqueous	++	++	++	++	+	++
Branntwine	++	++	++	++	++	++
Brindi Acid	+	x	++	++	O	++
Bromine	- -	O	+	O	- -	++
Hydrobromic Acid aqueous	O	O	++	+	O	++
Butadine	O	x	+	- -	O	++
Butan gaseous	+	O	+	- -	+	++
Butanol	++	++	+	++	O	++
Butyric Acid	+	x	+	x	x	++
Butyl Acetate	- -	- -	- -	+	- -	++
Butylene, liquid	+	x	++	- -	x	++
Butylene Glycol	++	++	++	++	++	++
Butylphenol	- -	- -	+	- -	- -	++
Butylaldehyde	- -	- -	- -	+	x	++
Calcium Acetate aqueous	+	x	- -	++	x	++
Calcium Bisulfite aqueous	+	+	+	++	x	++
Calcium Chloride aqueous	++	++	++	++	+	++
Calcium Hydroxide aqueous	++	++	++	++	O	++
Calcium Hypochloride aqueous	- -	x	++	++	x	++
Calypsol Grease WJA	+	x	++	x	x	++
Camphor	+	x	+	- -	x	++
Camphor Oil	+	x	+	- -	x	++
Chlorine, wet	- -	O	++	O	- -	++
Chlorine, dry	- -	O	++	+	- -	++
Chloral Hydrate aqueous	- -	x	+	+	x	++
Chloramine aqueous	++	x	- -	++	x	++
Chlorobenzene	- -	- -	+	- -	- -	++
Chlorobrommethane	- -	- -	+	x	- -	++
Chloracetic Acid	O	O	- -	+	- -	++
Calcium Chloride aqueous	- -	x	+	+	- -	++
Methyl Chloride	- -	x	+	- -	+	++
O-Chloro-Naphthalene	- -	- -	+	- -	- -	++
Chloroform	- -	- -	+	- -	- -	++
Chloroprene	- -	- -	O	- -	- -	++

++ = highly resistant; + = resistant; O = restricted resistant; - = restricted resistant to none resistant; - - = none restistant; x = not tested

General Technical Information

Media resistance of some basic materials

	NBR	MVQ	FPM	EPDM	PU	PTFE
Chlorsulfonic Acid	- -	- -	O	- -	- -	++
Hydrogen Chloride gas	- -	x	++	++	x	++
Chromic Acid	- -	O	++	O	x	++
Citronell Oil	+	+	++	x	x	++
Chlophen A 60	O	+	++	- -	x	++
Cyclohexanone	+	O	++	- -	++	++
Cyclohexanol	+	x	+	- -	x	++
Cyclohexanone (Anone)	- -	- -	- -	O	- -	++
Desmodur T 80	- -	O	+	- -	- -	++
Desmophen 2200	++	++	++	++	- -	++
Diacetone Alcohol	O	+	- -	++	+	++
Diethyl Ether	- -	- -	- -	- -	+	++
Diethyl Amin	- -	- -	- -	-	x	++
Diethylene Glycol	++	++	++	++	++	++
Diethylene Sebacal	- -	x	+	x	x	++
Diethylene Sulfate	- -	O	- -	x	- -	++
Dibenzyl Ether	- -	- -	O	+	x	++
Dibutyl Ether	- -	- -	- -	O	+	++
Dibutyl Pthalate	- -	x	+	+	x	++
Dichloroethane	- -	- -	+	- -	- -	++
Dichloroethylene	+	x	+	x	x	++
Dichlorobenzene	- -	- -	+	- -	x	++
Dichlorobutylene	- -	- -	+	- -	x	++
Dichloroaceticacid 20/60°C	+ / O	x	+ / O	+/+	x	++
Dichloro-Hexylamine	O	x	x	x	x	++
Diesel Fuel	++	x	++	- -	++	++
Diiobutylketone	- -	x	- -	+	x	++
Dimethy Ether	- -	x	- -	O	x	++
Dimethyl Aniline	- -	x	+	+	x	++
Dimethyl Formamide	- -	+	- -	+	- -	++
Dioctyl Pthalate	- -	x	+	O	x	++
Dioxane	- -	- -	- -	O	- -	++
Dioxolan	- -	x	x	O	x	++
Dipentene	+	x	++	- -	+	++
Diphenyloxide	- -	O	+	- -	x	++
Diphyl	- -	+	+	- -	x	++
Pressure Fluids a per						
DIN 51524 a. DIN 51525:						
Group H	++	O	++	- -	++	++
Group H-L	++	O	++	- -	++	++
Group H-LP	++	O	++	- -	++	++
Ecubsol Hydrotherm 36	++	x	++	+	x	++
Ferric Chloride aqueous	+	+	++	++	O	++
Ferric Sulphate aqueous	+	+	++	++	+	++
Glacial Acetic Acid pure 50° C	- -	+	- -	+	- -	++
Natural Gas	+	+	++	- -	+	++
Natural Oil	++	+	++	- -	+	++
Actic Acid 3,5 - 5 %	+	x	+	+	x	++
Acetate Ester	- -	- -	- -	O	- -	++
Acetic Acid 10 % / 50° C	- -	- -	- -	-	- -	++
Acetic Acid 25 % / 50° C	- -	- -	- -	- -	- -	++
Acetic Acid 75 % / 50° C	- -	- -	- -	- -	- -	++
Acetic Acid-Ethylester	- -	- -	- -	O	- -	++
Acetic anhydride	- -	x	- -	+	- -	++
Acetic Alcohol	++	++	+	++	x	++
Grease mineralic origin	++	+	++	- -	x	++
Grease plant origin	++	+	++	- -	x	++
Grease animal origin	++	+	++	- -	x	++

++ = highly resistant; + = resistant; O = restricted resistant; - = restricted resistant to none resistant; - - = none restistant; x = not tested

General Technical Information

Media resistance of some basic materials

	NBR	MVQ	FPM	EPDM	PU	PTFE
Fatty Acids	+	+	++	x	++	++
Pine needle Oil	+	O	++	x	+	++
Motor Fuel for aircrafts:						
JP3 (MIL-J-5624)	++	- -	++	- -	+	++
JP4 (MIL-J-5624)	++	- -	++	- -	+	++
JP5 (MIL-J-5624)	++	- -	++	- -	+	++
JP6 (MIL-J-25656)	++	- -	++	- -	+	++
Fluorene, dry	- -	x	++	x	x	++
Fluorbenzene	- -	- -	+	- -	x	++
Hydrofluoric Acid, hot < 65 %	- -	x	O	O	x	++
Hydrofluoric Acid, hot > 65 %	- -	x	O	O	x	++
Hydrofluoric Acid, cold < 65 %	O	x	++	O	x	++
Hydrofluoric Acid, cold> 65 %	O	x	++	O	x	++
Formaldehyde	++	x	++	++	x	++
Formamide, pure	+	x	++	+	O	++
Freon 11	+	O	+	O	x	++
Freon 12	+	O	+	O	x	++
Freon 13	+	x	+	x	x	++
Freon 14	+	-	+	x	x	++
Freon 21	- -	- -	- -	- -	x	++
Freon 22	- -	- -	- -	x	x	++
Freon 31	- -	- -	- -	x	x	++
Freon 32	+	x	- -	x	x	++
Freon 112	+	- -	+	- -	x	++
Freon 113	+	x	+	x	x	++
Freon 114	+	x	+	x	x	++
Freon 115	+	- -	+	x	x	++
Freon C318	++	- -	+	x	x	++
Furan (Furfuran)	- -	x	- -	O	x	++
Furfurol	- -	++	- -	+	- -	++
Gasoline Oil	++	+	++	- -	x	++
Gelatine	++	++	++	++	x	++
Tannic Acid	+	+	+	+	x	++
Transmission Lubricant	++	+	++	- -	+	++
Glucose	++	++	++	++	+	++
Glycol	+	+	+	+	x	++
Glycerine	++	++	+	++	++	++
Glycerol Chlorhydrin	- -	x	+	+	x	++
Marsh Gas	++	x	++	x	x	++
Urea aqueous	++	x	++	++	x	++
Yeast aqueous	++	x	++	++	x	++
Heating Oil mineral based	++	+	++	- -	++	++
Heating Oil (rock- and browncoal based	- -	- -	++	- -	+	++
Henkel, P-3-Solution	++	x	++	++	x	++
Heptane	++	++	++	- -	++	++
Hexachlorobutadine	- -	x	++	x	x	++
Hexane	++	+	++	- -	++	++
Hexane Triol	++	++	++	++	x	++
Furnace gas	+	+	++	x	x	++
Wood Oil	+	O	++	- -	x	++
Hydrazine	+	+	+	+	x	++
Hydrazine Hydrate	+	x	++	++	x	++
Isobutyl Alcohol	+	+	++	++	O	++
Isopropanol	+	+	++	++	O	++
Isopropylacetate	- -	- -	- -	+	- -	++
Isopropylether	O	- -	- -	O	- -	++
Isopropylchloride	- -	- -	+	- -	- -	++
Isooctane	++	- -	++	- -	+	++

++ = highly resistant; + = resistant; O = restricted resistant; - = restricted resistant to none resistant; - - = none restistant; x = not tested

General Technical Information

Media resistance of some basic materials

	NBR	MVQ	FPM	EPDM	PU	PTFE
Methanol	O	++	-	++	- -	++
Methylamine aqueous	- -	x	- -	++	x	++
Methyl Bromide	- -	- -	++	- -	- -	++
Methyl Enchloride	- -	- -	O	- -	- -	++
Methyl Glycol Acetate	- -	+	- -	++	- -	++
Methyl Isobutyl Ketone	- -	- -	- -	O	- -	++
Methyl Methacrylate	- -	- -	- -	-	- -	++
Methyl Pyrolidone	- -	+	- -	++	- -	++
Methyl Salicylate	- -	x	x	+	x	++
Methyl Sulfuric Acid aqueous	- -	x	O	++	x	++
Milk	++	++	++	++	++	++
Lactic Acid hot	+	x	++	++	x	++
Lactic Acid cold	+	x	++	++	x	++
Mineral Oils	++	+	++	- -	++	++
Monoethanol Amine	O	O	- -	++	- -	++
Monobrombenzene	- -	- -	+	- -	x	++
Monochloroacetic Acid	- -	- -	x	+	x	++
Monochloroacetic Methyl Esther	- -	- -	x	+	x	++
Morpholin	- -	x	++	++	x	++
Motor Oils	++	+	++	- -	++	++
Naptha	+	O	++	- -	+	++
Naphthaline	O	x	++	- -	- -	++
Naphtholen ZD	++	x	++	- -	x	++
Sodium Bicarbonate aqueous	+	+	++	++	O	++
Sodium Chlorate aqueous	O	x	++	+	x	++
Sodium Chloride aqueous	++	++	++	++	++	++
Sodium Chlorite aqueous	- -	x	++	++	x	++
Sodium Cyanide aqueous	+	+	++	++	x	++
Sodium Hypochlorite aqueous	- -	x	++	++	x	++
Sodium Carbonate aqueous	+	+	++	++	O	++
Sodium Nitrate aqueous	++	++	++	++	++	++
Sodium Phosphate aqueous	++	++	++	++	x	++
Sodium Silicate aqueous	++	++	++	++	x	++
Sodium Sulphate aqueous	++	++	++	++	x	++
Sodium Sulphide	+	x	++	++	x	++
Sodium Thiosulfate	O	+	++	++	x	++
Caustic Soda solo 10 %	O	- -	+	++	- -	++
Caustic Soda solo 25 %	- -	- -	O	++	- -	++
Caustic Soda solo 50 %	++	- -	O	++	- -	++
Nickel Acetate aqueous	+	- -	- -	++	- -	++
Nickel Chloride aqueous	++	++	++	++	++	++
Nickel Sulphate aqueous	++	++	++	++	++	++
Nitrobenzene	- -	x	O	- -	- -	++
Nitroglycerine	- -	x	++	++	x	++
Nitroglycol	- -	x	++	++	x	++
Nitromethane	- -	- -	- -	+	- -	++
Nitropropane	- -	- -	- -	+	- -	++
Nitrous Gas	- -	- -	O	O	- -	++
O-Nitrotoluene	- -	- -	O	- -	x	++
Oilic Acid	+	+	++	O	+	++
Oleum	- -	- -	++	- -	- -	++
Oleyl Alcohol	++	- -	++	++	- -	++
Olive Oil	++	+	++	- -	x	++
Oxalic Acid aqueous	++	++	++	++	x	++
Palmitic Acid	+	+	++	- -	x	++
Paraffin	++	+	++	- -	+	++
Paraffin Oil	++	+	++	- -	+	++
Pectin	++	++	++	++	++	++

++ = highly resistant; + = resistant; O = restricted resistant; - = restricted resistant to none resistant; - - = none restistant; x = not tested

General Technical Information

Media resistance of some basic materials

	NBR	MVQ	FPM	EPDM	PU	PTFE
Potassium Iodide aqueous	+	+	++	++	- -	++
Iodine Tincture	++	+	++	+	- -	++
Caustic Dye 50 %	++	- -	+	++	- -	++
Potassium	++	x	- -	++	++	++
Potassium bromate 20 %	++	+	++	++	- -	++
Potassium bromide aqueous	++	x	++	++	- -	++
Potassium carbonate aqueous	++	++	++	++	x	++
Potassium chlorate aqueous	- -	x	++	++	- -	++
Potassium chloride aqueous	++	++	++	++	++	++
Potassium chromate aqueous	+	x	++	++	x	++
Potassium cyanide aqueous	++	++	++	++	++	++
Potassium nitrate aqueous	++	x	++	++	x	++
Potassium perchlorate aqueous	O	x	++	++	x	++
Potassium sulphate aqueous	++	++	++	++	++	++
Lime Milk	O	x	++	- -	x	++
Carbolineum	+	- -	++	- -	+	++
Carbolic Acid	- -	x	+	- -	x	++
Kerosene (Kerosin)	+	- -	++	- -	+	++
Hexafluorosilicic Acid aqueous	++	x	++	++	x	++
Bone Fat	++	+	++	- -	++	++
Aqua Regia	- -	- -	+	- -	- -	++
Carbon dioxide wet	++	++	++	++	++	++
Carbon dioxide dry	++	++	++	++	++	++
Carbon monoxide	+	+	++	+	+	++
Carbon Acid	++	++	++	++	++	++
Coconut Oil	++	+	++	- -	++	++
Coke Oven gas	- -	x	++	x	x	++
Cresol aqueous	O	x	++	- -	x	++
Copper chloride aqueous	++	++	++	++	++	++
Copper Fluoride aqueous	+	x	++	++	x	++
Copper Nitrate aqueous	+	x	++	++	x	++
Copper Sulfate aqueous	++	x	++	++	x	++
Laughing gas	++	++	++	++	++	++
Lactame	- -	++	- -	- -	x	++
Lanolin (Wool Fat a. Lanocum	++	+	++	- -	++	++
Lauryl Alcohol	+	x	++	+	x	++
Cod Liver Oil	++	+	++	+	++	++
Adhesive Paste	++	++	++	+	++	++
Linseed Oil	++	O	++	O	+	++
Illumination gas	+	+	++	- -	++	++
Liquor	++	++	++	++	++	++
Lithium Bromide aqueous	++	++	++	++	++	++
Lithium Chloride aqueous	++	++	++	++	++	++
Magnesium Chlorid aqueous	+	++	++	++	O	++
Magnesium Hydroxide aqueous	++	++	++	++	++	++
Magnesium Sulphate aqueous aqueous	+	++	++	++	++	++
Maisol	++	+	++	O	++	++
Maleic Acid	++	++	++	++	x	++
Maleic Acid Anhydride	x	x	+	x	x	++
Margarine	++	+	++	- -	++	++
Maschine Oil, mineral	++	+	++	- -	++	++
Molasse	++	++	++	++	+	++
Methyl Ester	- -	- -	- -	-	- -	++
Methane	++	O	++	O	++	++
Methoxybutanol	++	x	++	++	x	++
Methyl Acrylate	- -	- -	- -	- -	- -	++
Methyl Ethyl Acetone	- -	- -	- -	+	- -	++

++ = highly resistant; + = resistant; O = restricted resistant; - = restricted resistant to none resistant; - - = none restistant; x = not tested

General Technical Information

Media resistance of some basic materials

	NBR	MVQ	FPM	EPDM	PU	PTFE
Pentane	++	x	++	- -	x	++
Perchlorethylen 50° C	- -	- -	+	- -	O	++
Perchloric Acid	- -	- -	++	++	x	++
Perfekthion S	- -	x	+	x	x	++
Petroleum Ether	++	+	++	- -	++	++
Petroleum	++	+	++	- -	++	++
Vegetable Oils	++	+	++	O	++	++
Phenol	- -	O	+	- -	- -	++
Phenyl Ethyl Ether	- -	- -	- -	x	x	++
Phenyl Benzone	- -	x	+	x	- -	++
Phenyl Hydrazine	O	O	+	O	x	++
Phosgene liquid	+	x	++	+	x	++
Phosgen gaseous	+	x	++	+	x	++
Phosphorous Oxichloride	- -	x	++	++	x	++
Phosphoric Acid cold <45 %	+	+	++	++	x	++
Phosphoric Acid concentrated	++	+	++	++	x	++
Phosphoric Acid hot, concentrated	- -	- -	++	++	x	++
Phosphorous Trichloride	- -	x	++	++	x	++
Hydrogen Phosphate	- -	x	++	++	x	++
Phthalic Acid Anhydride	++	x	++	x	x	++
Picrin Acid aqueous	+	++	++	++	x	++
Piperidine	- -	- -	- -	- -	- -	++
Propane	++	- -	++	- -	+	++
Propanol (1) 50° C	+	O	+	+	O	++
Propanoic Acid	+	x	++	- -	x	++
Propylene Glykol	+	x	++	++	x	++
Propylene Oxid	- -	x	- -	++	x	++
Pyridine	- -	- -	- -	- -	- -	++
Mercury	++	++	++	++	++	++
Qercuried Chloride	++	++	++	++	++	++
Castor Oil	++	+	++	O	++	++
Gas from Roasting	- -	+	++	++	x	++
Sagrotan	+	++	++	++	++	++
Salicyl Acid	++	++	++	++	++	++
Nitric Acid 30 % at 80°C	- -	- -	- -	- -	- -	++
Nitric Acid fuming 60°C	- -	- -	- -	- -	- -	++
Hydrochloric Acid 10 % at 80°	- -	x	+	++	x	++
Hydrochloric Acid 30 %	O	x	+	++	x	++
Hydrochloric Acid 37 % fuming	O	x	+	++	x	++
Lubricating Acid	++	+	++	- -	+	++
Black Lye	+	x	+	+	+	++
Sulphur	O	x	++	+	x	++
Sulphur Dioxide aqueous	- -	x	++	++	x	++
Carbon disulfide	- -	- -	++	- -	O	++
Sulphuric Acid 10 % at 60°C	+	+	+	++	- -	++
Sulphuric Acid 25 % at 60°C	+	+	+	++	- -	++
Sulphuric Acid 50 % at 60°C	- -	- -	+	++	- -	++
Sulphuric Acid 75 % at 60°C	- -	- -	+	+	- -	++
Sulphuric Acid 96 % at 60°C	- -	- -	+	- -	- -	++
Sulphuric Acid fuming	- -	- -	++	- -	- -	++
Sulphuric Trioxide	- -	+	+	+	x	++
Hydrogen Sulphide dry	O	x	O	++	x	++
Hydrogen Sulphide dry 80°C	O	x	O	++	x	++
HydrogenSulphide aqueous	O	x	O	++	x	++
Hydrogen Sulphide 80°C	O	x	O	++	x	++
Flame resistant pressure fluids of the class						
HFA	++	x	++	- -	x	++
HFB	++	x	++	- -	x	++

++ = highly resistant; + = resistant; O = restricted resistant; - = restricted resistant to none resistant; - - = none restistant; x = not tested

General Technical Information

Media resistance of some basic materials

	NBR	MVQ	FPM	EPDM	PU	PTFE
HFC	+	+	+	+	x	++
HFD.....R	- -	+	++	+	x	++
HFD.....S	- -	+	++	- -	x	++
HFD.....T	- -	+	++	- -	x	++
Soap Solution	++	++	++	++	x	++
Silver Nitrate aqueous	++	++	++	++	++	++
Silicon Oils	++	- -	++	x	x	++
Soy bean Oil	++	+	++	- -	x	++
Stearic Acid	++	++	++	++	++	++
Styrene	- -	- -	+	- -	- -	++
Sulphur Chloride	- -	x	++	+	x	++
Talc	+	x	++	+	x	++
Tanin	+	x	++	++	x	++
Tectal	- -	- -	+	- -	- -	++
Tar	- -	x	+	- -	x	++
Terpentine	++	- -	++	- -	O	++
Terpentine Oil	+	- -	++	- -	x	++
Tetrachloroethylene	- -	- -	+	- -	- -	++
Carbon Tetrachloride	- -	- -	+	- -	- -	++
Tetrahydrofuran	- -	- -	- -	- -	- -	++
Tetraline (Tetrahydronapthaline)	O	x	++	- -	x	++
Thionyl Chloride	O	x	++	++	x	++
Thiophene	- -	x	- -	- -	x	++
Ink	++	++	++	++	++	++
Toluene 20° C	- -	- -	+	- -	- -	++
Transformer Oil	+	O	+	- -	++	++
Triethanolamine	O	x	- -	++	x	++
Triethylglycole	++	++	++	++	++	++
Tributyl Phosphate	- -	x	O	+	x	++
Trichlore Ethylene	- -	- -	+	- -	- -	++
Trichloracetic Acid	+	x	- -	+	x	++
Tricresyl Phospate	- -	x	+	+	x	++
Vaseline	++	+	++	x	+	++
Vinyl Acetate	- -	x	- -	+	x	++
Vinyl Chloride aqueous	- -	x	+	x	x	++
Sperm Oil	++	x	++	- -	x	++
Water cold	++	++	++	++	+	++
Water up to 80°C	+	++	++	++	- -	++
Water up to 100°C	+	O	++	++	- -	++
Water destilled 50°C	+	+	+	++	- -	++
Sea Water	++	++	++	++	- -	++
Hydrogen Gas cold	++	x	++	++	++	++
Hydrogen Gas hot	+	x	++	++	x	++
Hydrogen Superoxid 90 %	- -	x	+	+	x	++
Wine Acid	++	++	++	++	x	++
Wool Fat	++	+	++	- -	++	++
Xylene	- -	- -	+	- -	- -	++
Zinc Chloride aqueous	+	++	++	++	x	++
Zinc Sulphate aqueous	++	++	++	++	x	++
Tinn Chloride aqueous	++	++	++	++	x	++
Citric Acid	+	++	++	++	x	++
Sugarcane Juice	++	++	++	++	x	++

++ = highly resistant; + = resistant; O = restricted resistant; - = restricted resistant to none resistant; - - = none restistant; x = not tested

Assembly area:

The two basic types of Assembly design:

1. Axial "open" groove design (see fig. 1)
2. Closed groove (see fig. 2)

Both types are used on the piston side as well as on the rod side.

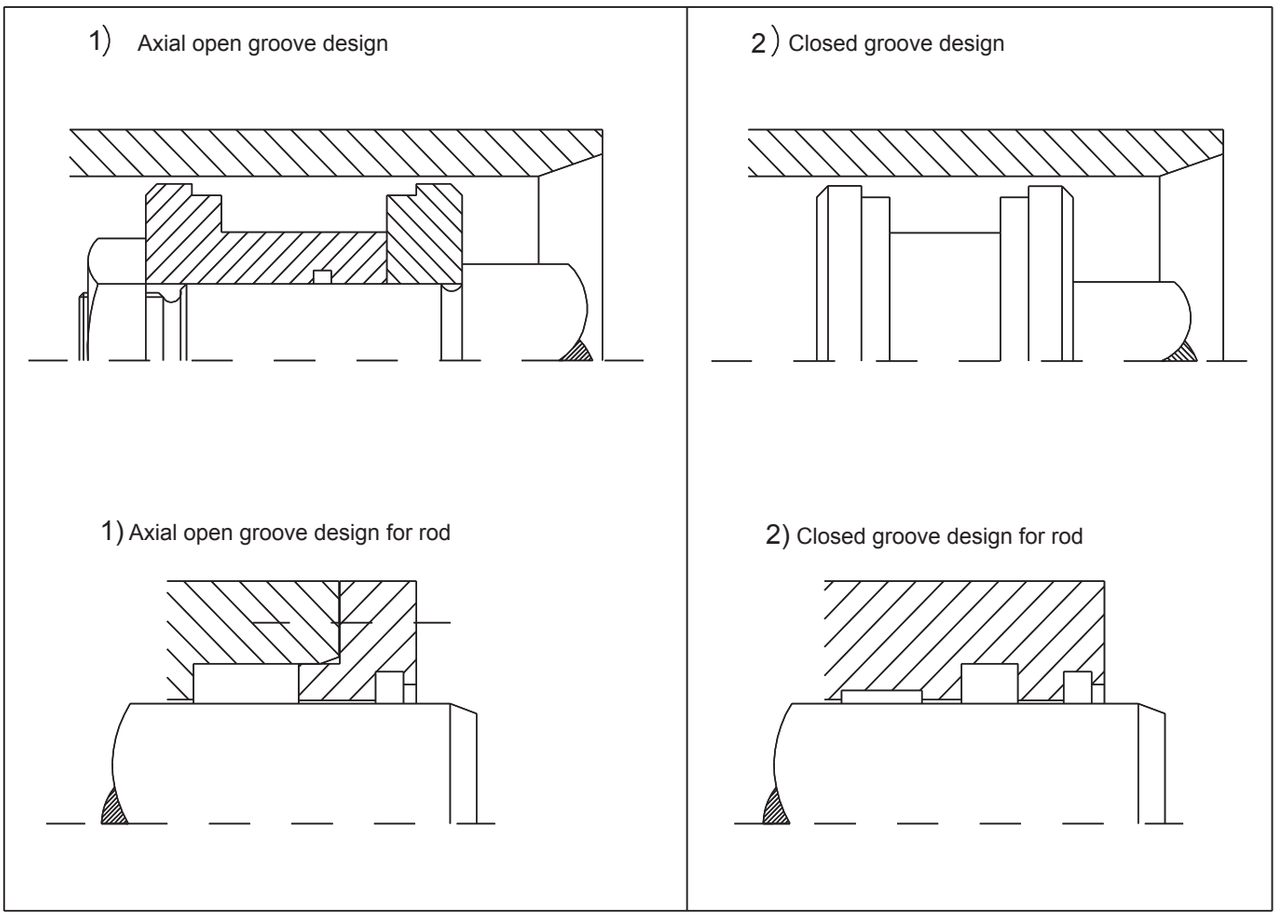

Some sealing elements like fiber reinforced seals with large cross section need an open groove ddue to it being stiff and needs an open groove to achive simple assembly. Open grooves are also required in cases where assembly involves small diameters.

General Technical Information

Modern design of open grooves

We have evolved this highly advantageous system for rod sealing and guiding in consultation with our clients (drawing N°. 3).

This design is used for many years in system up to 25 MPa.

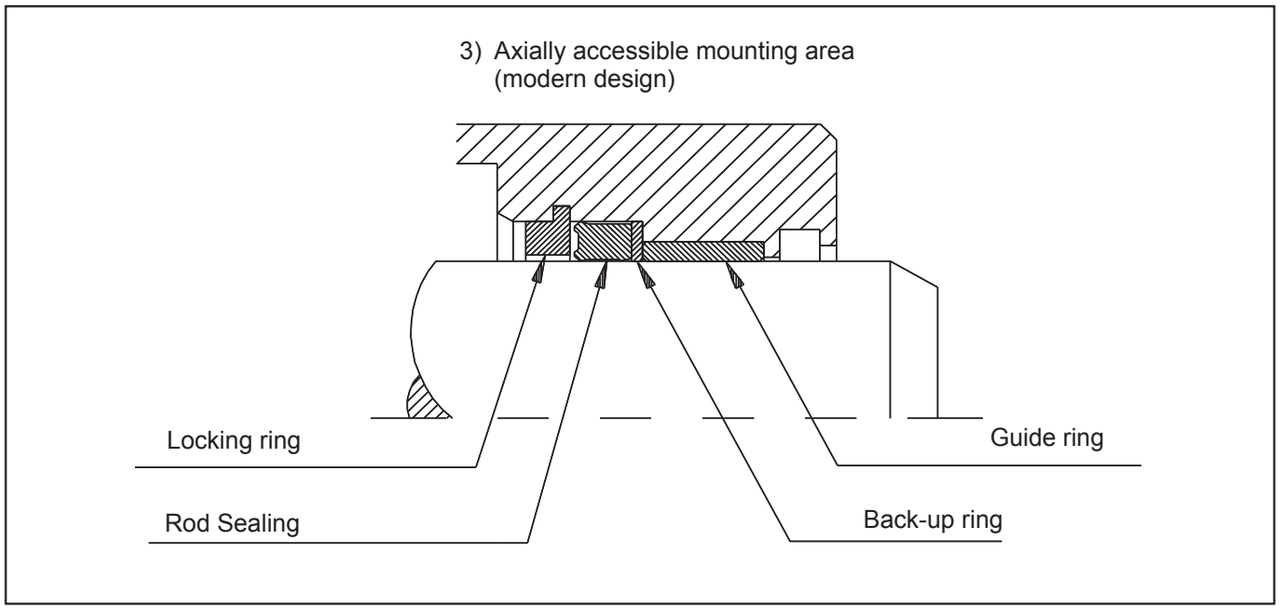

This proven variation of the open groove offers the following advantage over the conventional design with closed groove:

- Simple and cost effective manufacture of connecting piece head
- Optimal control of surface areas at the static sealing site and component accuracy to size
- Safe and fast assembly of sealing and guiding elements without the danger of damage to sealing edges
- Automatic assembly possible
- Variable design of guide lengths
- Service friendly: some components of the sealing system can be quickly and easily replaced
- Optimal protection against split extrusion of rod sealing through additional support ring.

.

General assembly information:

To avoid assembly related damage and to enhance the service life of seals, please follow the advice given below:

To avoid assembly related damage, carefully remove sharp edges, burr and all likely sources of contamination.

Adequate lead-in bevels simplify the assembly process and reduce possibility of damage. The following formula gives required lead-in bevel:

$$L = \frac{D - d}{4}$$

L: Length of lead-in bevel D: nominal external diameter d: nominal internal diameter

General Technical Information

General assembley hints

- During assembly over threads, insert adequate protection between the sealing and the thread.
- Pre assembled seals must never be subject to unilateral loads prior to assembly since this may cause deformation.
- Moderate heating of seals up to 80-100°C in hydraulic oils or water make the assembly of the seals much asier, and even easier as per the instructions below.

Guidelines for assembly of PTFE piston seals

To ensure a safe and proper assembly please adhere to the specified measurements, tolerances and surface areas strictly. Initially the O-ring is inserted in the groove. Piston seals of up to 100 mm nominal diameter and radial thickness of over 1.6 mm are stretched apart carefully using assembly tools and snap fit into the groove (see drawing).

Piston seals of over 100 mm nominal diameter can be fitted by hand, depending on the seal cross-section, otherwise always use a calibration to so as not to destroy the seal while fitting the pistion into the cylinder bore.

Lead in grooves that occur incidentally can be bridged by sheet metal or plastic strips or bands.
We recommend the use of an expanding mandrel to overcome assembly problems related to short lead-ins and large amounts of stretching (see drawing).

Assembly tools are to be fabricated preferably from hardened steel or POM materials.

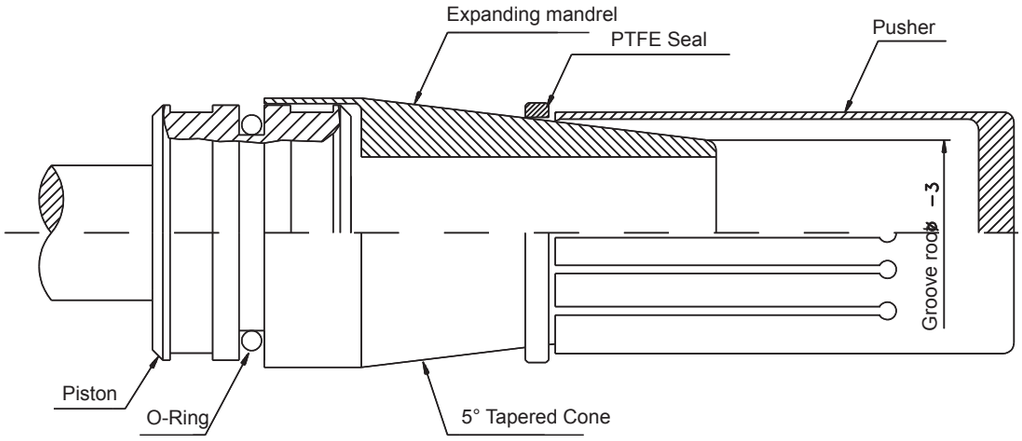

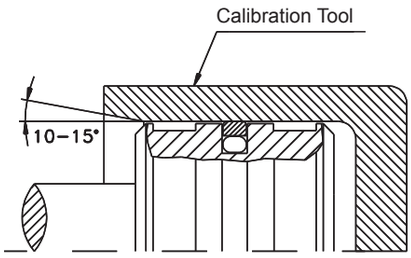

General Technical Information

Guidelines for assembly of PTFE rod seals

To provide safe and proper assembly, please follow the technical information and specified measurements, tolerances and surface values strictly.

Initially the O-ring is inserted in the groove (for rods up to 30 mm of nominal diameter we recommend the use of open groove or a small radial cross-section as it is important during fitting in closed groove.).

The rod seal is now carefully bent to a kidney shape, inserted in the groove and resized first by hand and then with a suitable resizing tool.

A metallic/POM conical mandrel can also be used to resize the profile sealing ring. The mandrel contains a wedge shaped recess at the front end. A recess can be pre-cut into the ring. The ring can subsequently be inserted into the groove as specified above. The seal diameter must be resized, it is best is to resize just before fitting the rod into the gland.

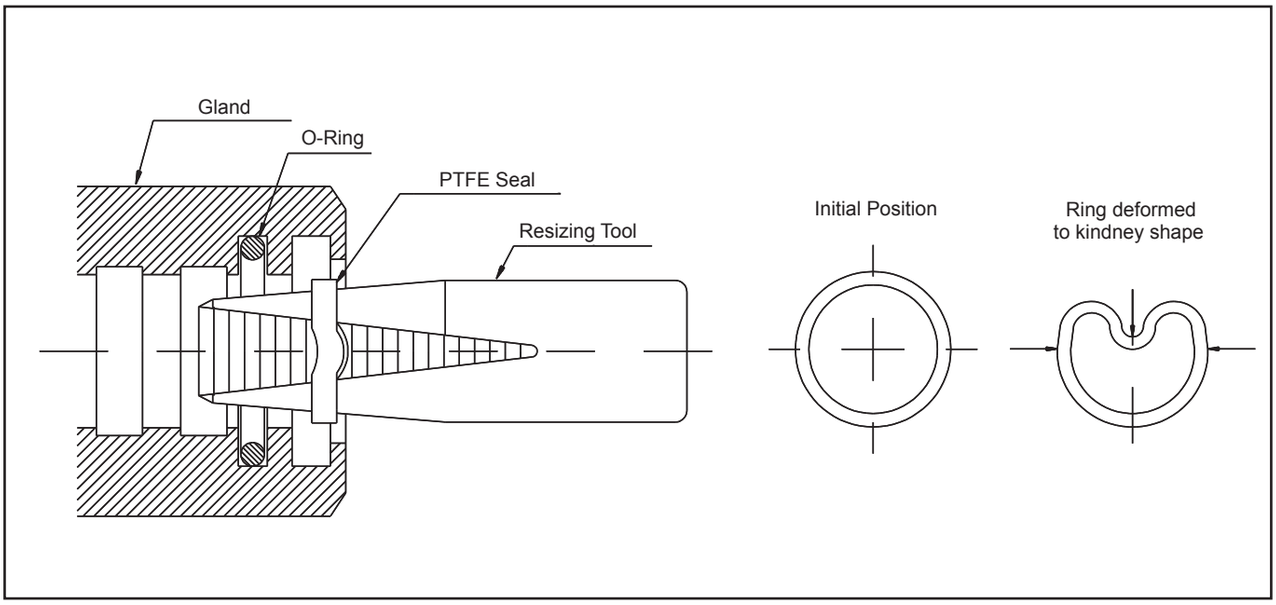

Storage of rubber products

(Also refer DIN 7716)

During storage, vulcanized rubber products tend to undergo a change in their physical characteristics subject to influence of oxygen, ozone, light, heat and/or moisture. Careless storage can damage rubber products leading to hardening, softening, cracks,etc.,which render the product useless.Careful compliance to the following suggestions can reduce the damage to rubber components providing providing prolonged life.

Temperature

Store room temperature may not exceed +25°C. Constant exposure to low temperatures (also below 0°C) does not harm rubber products. If rubber articles need to be taken out of the store room at sub zero temperatures, they should first be warmed to +20°C.

Oxygen - Ozone

Whenever possible, vulcanized rubber products must be protected from ambient environment using suitable packaging such as storage in air-tight bags. This specifically applies to rubber articles with larger surface area and volume. Ozone attacks rubber, therefore the storage room must never contain electrical equipment that promotes the generation of ozone.

General Technical Information

Storage of rubber products

Light

Rubber products must be protected from direct sun and artificial light sources with high UV content. If articles are not packed in opaque containers or special bags, it is essential that store room windows be coated with anti UV material.

Deformation

If possible, store these products free from pressure elongation and deformation to avoid deformation. Preferably retain these products in their original packaging.

Contact with Fluids and Semifluid Media

Rubber articles should not have contact with fluid or semifluid media during storage. Contact with solvents, oils and greases should be avoided.

Contact with Metals

Metals like manganese, steel, copper and its alloys can destroy rubber products when in direct contact. A simple protective partition from paper, polyethylene sheet,etc.,may be used to isolate the seals.

Contact with Non-Metals

Contact with other kinds of rubber or PVC is to be avoided.

Storage Duration

Keep storage time to a minimum and follow the principle of "first-in-first-out" in using the seals.

Cleaning

Cleansing of rubber products, if necessary, can be carried out with water, soap or methanol. Organic cleaning solvents like trichloro ethylene, carbon tetrachloride or petroleum are not to be used. All parts must be dried at room temperature before use.

Storage Time

The polymer incorporated in the rubber product determines its service life. The following table gives shelf life under optimal conditions. The following criteria should be strictly checked prior to first use and after the initial storing time.

1.) Recognizable mechanical destruction
2.) Permanent deformations and changes
3.) Check for hairline cracks or change in surface structure
4.) Check for undue softening or surface hardening of the material.

Basic Polymer	First Time Storage	Storage after Inspection (2nd)
Fluoroelastomer /GFPM Fluorosilicones Chlorosulphonated PE	10 years	4 years
Neoprene (CR) Ethylene-Propylene-Diene (EPDM) Nitrile/PVC blend	5 years	2 years
Natural Rubber Nitrile (NBR) Butyl Rubber Polyurethan (PU) Styrol Butadiene Rubber (SBR)	3-5 years	2 years

WARNING: Limits of application stated herein are standard values. They could be individually transgressed with due consideration to respective service conditions. In the event of a large duty cycle, pulsating operation and other complex operational conditions, simultaneous transgression of these values is not recommended. Due to a large variety of service conditions that may arise in course of actual use, the company does not take responsibility of or guarantee the functional accuracy of the individual components. Rights for changes are reserved.

product index

Profile	Type	Specification	Limitations of Use: Temperature	Limitations of Use: Pressure	Limitations of Use: Velocity	Material: Sealing element	Page
	MD	Compact seal - double acting (5-pieces)	-30 up to +110° C	up to 40 MPa (400 bar)	up to 0,5 m/s	NBR	18
	MD	Compact seal - double acting (for ISO-housing areas) 5-pieces	-30 up to +110° C	up to 40 MPa (400 bar)	up to 0,5 m/s	NBR	24
	A	Compact seal - double acting (5-pieces)	-30 up to +110° C	up to 70 MPa (700 bar)	up to 0,5 m/s	NBR	28
	SM	Compact seal - double acting (3-pieces)	-30 up to +110° C	up to 40 MPa (400 bar)	up to 0,5 m/s	NBR fabric	32
	TDE	Compact seal - double acting (3-pieces)	-30 up to +110° C	up to 50 MPa (500 bar)	up to 0,5 m/s	NBR fabric	35
	SW+RR	Compact seal - single acting with keeper ring (5-pieces)	-30 up to +110° C	up to40 MPa (400 bar)	up to 0,5 m/s	NBR fabric	38
	CH	V - ring - single acting (3-pieces)	-30 up to +110° C	up to 40 MPa (400 bar)	up to 0,5 m/s	NBR fabric	41
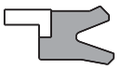	SAW	U - ring - single acting with anti-extrusion ring	-40 up to +110° C	up to 40 MPa (400 bar)	up to 0,8 m/s	AU Polyurethan	43
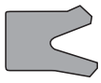	SA UN	U - ring - single acting	-40 up to +110° C	up to 40 MPa (400 bar)	up to 0,8 m/s	AU Polyurethane	45
	MSS	Compact seal - double acting (for ISO-housing areas) 3-pieces	-40 up to +110° C	up to 25 MPa (250 bar)	up to 0,5 m/s	NBR	51
	URGT	Double acting with NBR-expander	-40 up to +110° C	up to 40 MPa (400 bar)	up to 0,8 m/s	AU Polyurethane	53
	TTO	Double acting with O-ring	-40 up to +110° C	up to 50 MPa (500 bar)	up to 0,5 m/s	AU Polyurethane	56
	AF-511	Double acting with O-ring	-40 up to +200° C	up to 40 MPa (400 bar)	up to 15 m/s	PTFE Compound	59
	AF 518	Double acting with O-ring	-40 up to +200° C		up to 15 m/s	PTFE Compound	63
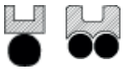	AF-551 AF-553	Double acting with 1 O-ring and 1 X-ring Double acting with 2 O-rings and 1 X-ring	-40 up to +200° C	up to 40 MPa (400 bar)	up to 3-5 m/s	PTFE Compound	64
	AF-541	Single acting with O-ring	-40 up to +200° C	up to 40 MPa (400 bar)	up to 15 m/s	PTFE Compound	65
	GHT	Compact seal - double acting	-30 up to +110° C	up to 50 MPa (500 bar)	up to 1,5 m/s	PTFE Compound	69
	ASL-Seals	Single acting with spring	-150 up to +255° C	up to 35 MPa (350 bar)	up to 20 m/s	PTFE Compound	73
	P	Piston ring with special split		up to 200 MPa (2000 bar)	up to 40 m/s	Cast Iron gas tight	81

Regarding the great variety of practice applications, please ask our customer service department personally for any missing types or dimensions.

Piston Seal
MD

Double actuate piston seals of the MD series combine sealing and guiding functions to the most narrow spaces. The special form of the sealing element also makes them suitable for use with a lifting or positioning cylinder.

All material is carefully chosen for the construction as it also makes it suitable for extreme service conditions.

Special Features:

- The 5 part sealing set. Possible to mount with snap even with closed piston grooves.
- These seal components are made of a heavy wear-resistantgrade of NBR compound.
- Sealing rubber part with three sealing lips. Optimal efficiency with a low friction.
- Also suitable for single acting pressure.
- Torsion resistant due to form of components.
- Heavy duty support rings with pressure relief/ grooves.
- Extensive variety of sizes is available.

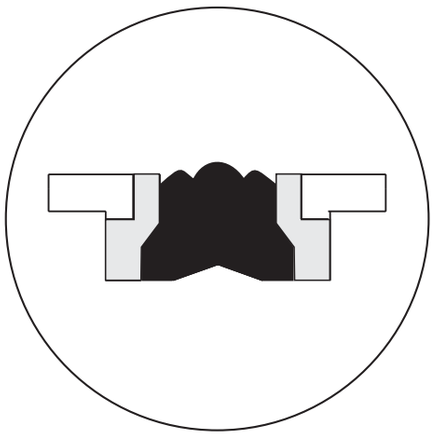

Material : modified NBR
Operating pressure: up to 40 MPa
Speed : reciprocating to 0, 5 m/s
Temperature : -30 to +110 °C

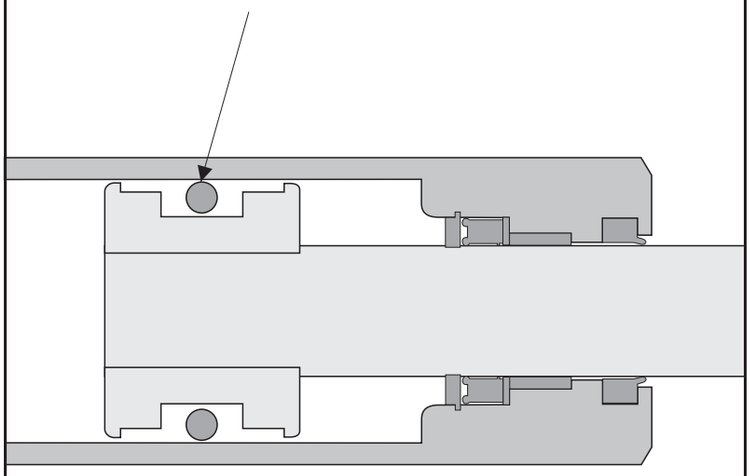

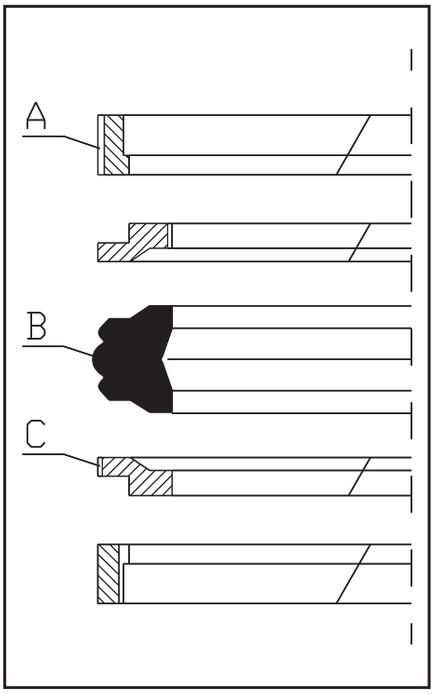

Guide Ring - Part A

Material: filled Pom/Acetal

Short insides of the split/partitioned slide rings guarantee considerably simple assembly on single piece pistons. The practical design facilitates optimal distribution of transverse forces/shear forces that come into play. Axial unloading grooves ensure a shorter response time of the seal in case of quick changes in load. Specially designed materials ensure high pressure stability, even in case of variable thermal conditions. Low finishing tolerances ensure better piston sliding and optimize the seal function.

Sealing Ring - Part B

Material: NBR

Sturdy sealing ring from highly wear-resistant NBR are proven to be superior due to low compression strain and high tensile strength. Out of the three sealing edges, the larger one in the middle serves as the primary seal, and the two smaller external lips serve as a pre-seal. The broad clamping area is taken up by static sealing of the groove diameter and rubber part.

Specially designed angular shoulders incorporated on both sides eliminate the possibility of turning of the sealing element in the event of shocks.

Support Ring - Part C

Material: Hytrel-Elastomer

Both support rings together are produced to the required form and force locking arrangements between sealing element and sliding ring. Special material and close tolerances prevent extrusion of the sliding elements.

Pressure relief grooves on the dynamic side eliminates pressure concentration even with quick load variations.

Double action piston seal series MD has been used as a cylinder seal for years. The universal range of application from low pressures to heavy hydraulics is a major advantage. It also has proven results in cases of unilateral pressure application.

Piston Seal
MD

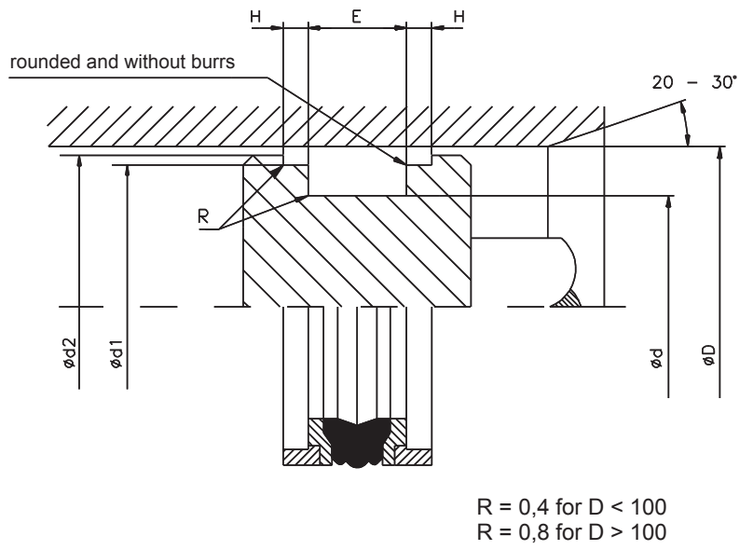

Limitations on use

Maximum allowable operational pressure depending on the rubbing speed and temperature range of application is given below:

Vmax [m/s]	Application Temperature [°C]		
	-30 +60	-30 +80	-30 +110
0,50	25 MPa	16 MPa	10 MPa
0,15	40 MPa	25 MPa	16 MPa

Media for use

Mineral oil based hydraulic oils, flame resistant pressure media and emulsions (HFA, HFB, HFC), Bio oils.

Surface finish

Surfaces	Rmax	Rz	Ra
Housing bore D	2,5 µm	1,6 µm	0,4 µm
Groove d	10,0 µm	6,3 µm	1,6 µm
Groove flanks	16,0 µm	10,0 µm	3,2 µm

Extensive range of inch measurement diagrams available on request.

D H9	d h9	E +0,2	H +0,1	d1 h9	d2 h11	Part N°.
20,00	11,00	13,50	2,10	17,00	19,00	MD 20/11x13,5
22,00	13,00	13,50	2,10	19,00	21,00	MD 22/13x13,5
25,00	15,00	12,00	4,00	21,00	23,00	MD 25/15x12,5
25,00	**15,00**	**12,50**	**4,00**	**22,00**	**24,00**	**MD 25/15x12**
25,00	15,00	16,40	6,35	21,45	23,50	MD 25/15x16,4
25,00	16,00	13,50	2,10	22,00	24,00	MD 25/16x13,5
25,00	**17,00**	**10,00**	**4,00**	**22,00**	**24,00**	**MD 25/17x10**
25,00	17,00	13,50	3,20	21,00	24,40	MD 25/17x13,5
28,00	19,00	13,50	2,10	25,00	27,00	MD 28/19x13,5
30,00	17,00	15,40	6,35	26,50	29,00	MD 30/17x15,4
30,00	21,00	13,50	2,10	27,00	29,00	MD 30/21x13,5
30,00	22,00	13,50	3,20	26,00	29,40	MD 30/22x13,5
32,00	**22,00**	**12,50**	**4,00**	**29,00**	**31,00**	**MD 32/22x12,5**
32,00	22,00	15,50	2,60	28,00	31,00	MD 32/22x15,5
32,00	22,00	16,40	6,35	28,50	30,50	MD 32/22x16,4
32,00	**24,00**	**10,00**	**4,00**	**29,00**	**31,00**	**MD 32/24x10**
32,00	24,00	15,50	3,20	28,00	31,40	MD 32/24x15,5
35,00	25,00	15,50	2,60	31,00	34,00	MD 35/25x15,5
35,00	25,00	16,40	6,35	31,40	33,50	MD 35/25x16,4
35,00	27,00	15,50	3,20	31,00	34,40	MD 35/27x15,5
36,00	26,00	15,50	2,60	32,00	35,00	MD 36/26x15,5
40,00	24,00	18,40	6,35	35,40	38,50	MD 40/24x18,4
40,00	26,00	15,50	2,60	36,00	39,00	MD 40/26x15,5
40,00	30,00	12,50	4,00	36,00	38,00	MD 40/30x12,5
40,00	**30,00**	**12,50**	**4,00**	**37,00**	**39,00**	**MD 40/30x12,5**
40,00	30,00	16,40	6,35	35,40	38,50	MD 40/30x16,4
40,00	**32,00**	**10,00**	**4,00**	**37,00**	**39,00**	**MD 40/32x10**
40,00	32,00	15,50	3,20	36,00	39,40	MD 40/30x15,5
42,00	28,00	15,50	2,60	38,00	41,00	MD 42/28x15,5
45,00	29,00	18,40	6,35	40,40	43,70	MD 45/29x18,4
45,00	31,00	15,50	2,60	41,00	44,00	MD 45/31x15,5
45,00	35,00	16,40	6,35	40,40	43,50	MD 45/35x16,4

Piston Seal
MD

D H9	d h9	E +0,2	H +0,1	d1 h9	d2 h11	Part N°.
45,00	37,00	15,50	3,20	41,00	44,40	MD 45/37x15,5
50,00	34,00	18,40	6,35	45,40	48,70	MD 50/34x18,4
50,00	34,00	20,50	3,10	46,00	49,00	MD 50/34x20,5
50,00	**35,00**	**20,00**	**5,00**	**46,00**	**48,50**	**MD 50/35x20**
50,00	38,00	20,50	4,20	46,00	49,40	MD 50/38x20,5
50,00	**40,00**	**12,50**	**4,00**	**47,00**	**49,00**	**MD 50/40x12,5**
55,00	39,00	18,40	6,35	50,36	53,50	MD 55/39x18,4
55,00	39,00	20,50	3,10	51,00	54,00	MD 55/39x20,5
55,00	43,00	20,50	4,20	51,00	54,90	MD 55/43x20,5
55,00	45,00	12,50	4,00	52,00	54,00	MD 55/45x12,5
56,00	40,00	20,50	3,10	52,00	55,00	MD 56/40x20,5
60,00	44,00	18,40	6,35	55,40	58,50	MD 60/44x18,4
60,00	44,00	20,50	3,10	56,00	59,00	MD 60/44x20,5
60,00	48,00	20,50	4,20	56,00	59,40	MD 60/48x20,5
63,00	47,00	18,40	6,35	58,40	61,50	MD 63/47x18,4
63,00	47,00	19,40	6,35	58,40	61,60	MD 63/47x19,4
63,00	47,00	20,50	3,10	59,00	62,00	MD 63/47x20,5
63,00	**48,00**	**20,00**	**5,00**	**59,00**	**61,50**	**MD 63/48x20**
63,00	51,00	20,50	4,20	59,00	62,40	MD 63/51x20,5
63,00	**53,00**	**12,50**	**4,00**	**60,00**	**62,00**	**MD 63/53x12,5**
65,00	49,00	20,50	3,10	61,00	64,00	MD 65/49x20,5
65,00	50,00	18,40	6,35	60,40	63,50	MD 65/50x18,4
65,00	53,00	20,50	4,20	61,00	64,90	MD 65/53x20,5
70,00	50,00	22,40	6,35	64,20	68,30	MD 70/55x20,4
70,00	54,00	20,50	3,10	66,00	69,00	MD 70/54x20,5
70,00	55,00	20,00	5,00	66,00	68,50	MD 70/55x20
70,00	58,00	20,50	4,20	66,00	69,40	MD 70/58x20,5
75,00	55,00	22,40	6,35	69,20	73,30	MD 75/55x22,4
75,00	59,00	20,50	3,10	71,00	74,00	MD 75/59x20,5
80,00	60,00	22,40	6,35	74,15	78,30	MD 80/60x22,4
80,00	**60,00**	**25,00**	**6,35**	**75,00**	**78,00**	**MD 80/60x25**
80,00	62,00	22,50	3,60	76,00	79,00	MD 80/62x22,5
80,00	**65,00**	**20,00**	**5,00**	**76,00**	**78,50**	**MD 80/65x20**
80,00	66,00	22,50	5,20	76,00	79,40	MD 80/66x22,5
85,00	65,00	22,40	6,35	79,15	83,30	MD 85/65x22,4
85,00	75,00	20,00	4,00	81,00	83,34	MD 85/75x20
90,00	70,00	22,40	6,35	84,15	88,30	MD 90/70x22,4
90,00	72,00	22,50	3,60	86,00	89,00	MD 90/72x22,5
90,00	75,00	20,00	5,00	86,00	88,50	MD 90/75x20
90,00	76,00	22,50	5,20	86,00	89,40	MD 90/76x22,5
95,00	75,00	22,40	6,35	89,15	93,30	MD 95/75x22,4
100,00	75,00	22,40	6,35	93,15	98,00	MD 100/75x22,4
100,00	**80,00**	**25,00**	**6,30**	**95,00**	**98,00**	**MD 100/80x25**
100,00	82,00	22,50	3,60	96,00	99,00	MD 100/82x22,5
100,00	**85,00**	**20,00**	**5,00**	**96,00**	**98,50**	**MD 100/85x20**
100,00	86,00	20,00	5,00	96,00	98,50	MD 100/86x20
100,00	86,00	22,50	5,20	96,00	99,40	MD 100/86x22,5
105,00	80,00	22,40	6,35	98,10	103,00	MD 105/80x22,4
110,00	85,00	22,40	6,35	103,10	108,00	MD 110/85x22,4
110,00	85,00	25,40	6,35	103,10	108,00	MD 110/85x25,4
110,00	90,00	25,30	6,40	104,10	108,30	MD 110/90x25,3
110,00	92,00	22,50	3,60	106,00	109,00	MD 110/92x22,5
110,00	95,00	20,00	5,00	105,00	108,00	MD 110/95x20
110,00	96,00	22,50	5,20	106,00	109,40	MD 110/96x22,5
115,00	90,00	22,40	6,35	108,10	113,00	MD 115/90x22,4
115,00	97,00	22,50	3,60	111,00	114,00	MD 115/97x22,5
120,00	95,00	22,40	6,35	113,10	118,00	MD 120/95x22,4
120,00	106,00	22,50	5,20	116,00	119,40	MD 120/106x22,5
125,00	100,00	25,40	6,35	118,10	123,00	MD 125/100x25,4
125,00	**100,00**	**32,00**	**10,00**	**119,00**	**123,00**	**MD 125/100x32**
125,00	103,00	26,50	5,10	121,00	124,00	MD 125/100x26,5

Piston Seal
MD

D H9	d h9	E +0,2	H +0,1	d1 h9	d2 h11	Part N°.
125,00	105,00	25,40	6,35	119,10	123,30	MD 125/105x25,4
125,00	108,00	26,50	7,20	121,00	124,40	MD 125/108x26,5
130,00	105,00	25,40	6,35	123,10	128,00	MD 130/105x25,4
130,00	105,00	25,40	9,50	122,60	127,50	MD 130/105x25,4
130,00	110,00	25,40	6,35	124,10	128,30	MD 130/110x25,4
135,00	110,00	25,40	6,35	128,10	133,00	MD 135/110x25,4
135,00	110,00	25,40	9,50	127,60	132,50	MD 135/110x25,4
140,00	115,00	25,40	6,35	133,00	138,00	MD 140/115x25,4
140,00	115,00	25,40	9,50	132,60	137,50	MD 140/115x25,4
140,00	118,00	26,50	5,10	136,00	139,00	MD 140/118x26,5
140,00	120,00	25,00	6,35	135,00	138,00	MD 140/120x25
140,00	123,00	26,50	7,20	136,00	139,40	MD 140/123x26,5
145,00	120,00	25,40	6,35	138,30	142,95	MD 145/120x25,4
145,00	120,00	25,40	9,50	137,60	142,50	MD 145/120x25,4
150,00	125,00	25,40	6,35	143,00	148,00	MD 150/125x25,4
150,00	125,00	25,40	9,50	142,60	147,50	MD 150/125x25,4
150,00	128,00	26,50	5,10	146,00	149,00	MD 150/128x26,5
150,00	130,00	25,40	6,35	144,10	148,30	MD 150/130x25,4
150,00	133,00	26,50	7,20	146,00	149,40	MD 150/133x26,5
155,00	130,00	25,40	6,35	148,00	153,00	MD 155/130x25,4
155,00	130,00	25,40	9,50	147,60	152,50	MD 155/130x25,4
160,00	130,00	25,40	9,50	152,60	157,50	MD 160/130x25,4
160,00	130,00	25,40	6,35	153,00	157,50	MD 160/130x25,4
160,00	135,00	25,40	9,50	152,60	157,50	MD 160/135x25,4
160,00	**135,00**	**32,00**	**10,00**	**154,00**	**158,00**	**MD 160/135x32**
160,00	138,00	26,50	5,10	156,00	159,00	MD 160/138x26,5
160,00	**140,00**	**25,00**	**6,30**	**155,00**	**158,00**	**MD 160/140x25**
160,00	143,00	26,50	7,20	156,00	159,40	MD 160/143x26,5
165,00	140,00	25,40	9,50	157,60	162,50	MD 165/140x25,4
170,00	145,00	25,40	12,70	161,70	167,10	MD 170/145x25,4
170,00	148,00	26,50	5,10	166,00	169,00	MD 170/148x26,5
175,00	150,00	25,40	12,70	166,70	172,10	MD 175/150x25,4
180,00	150,00	35,40	6,35	172,95	177,87	MD 180/150x35,4
180,00	155,00	25,40	12,70	171,70	177,10	MD 180/155x25,4
180,00	158,00	26,50	5,10	176,00	179,00	MD 180/158x26,5
180,00	163,00	26,50	7,20	176,00	179,40	MD 180/163x26,5
185,00	160,00	25,40	12,70	176,70	182,10	MD 185/160x25,4
190,00	165,00	25,40	12,70	181,70	187,00	MD 190/165x25,4
195,00	170,00	25,40	12,70	186,70	192,00	MD 195/170x25,4
200,00	170,00	35,40	6,35	193,00	198,00	MD 200/170x35,4
200,00	170,00	36,00	6,35	192,00	197,00	MD 200/170x36
200,00	175,00	25,40	12,70	191,60	197,00	MD 200/175x25,4
200,00	175,00	31,50	6,60	196,00	199,00	MD 200/170x31,5
200,00	180,00	31,50	9,20	196,00	199,40	MD 200/180x31,5
200,00	170,00	35,40	6,35	193,00	198,00	MD 200/170x35,4
210,00	185,00	25,40	12,70	201,60	207,00	MD 210/185x25,4
220,00	190,00	35,40	6,35	212,70	217,90	MD 220/190x35,4
220,00	195,00	25,40	12,70	211,60	217,00	MD 220/195x25,4
220,00	200,00	31,50	9,20	216,00	219,40	MD 220/200x31,5
225,00	200,00	25,40	12,70	216,62	222,00	MD 225/200x25,4
225,00	200,00	31,50	6,60	221,00	224,00	MD 225/200x31,5
230,00	205,00	25,40	12,70	221,60	227,00	MD 230/205x25,4
240,00	215,00	25,40	12,70	231,60	237,00	MD 240/215x25,4
250,00	220,00	35,40	6,35	242,90	247,85	MD 250/220x35,4
250,00	**220,00**	**36,00**	**12,50**	**242,00**	**247,00**	**MD 250/220x36**
250,00	225,00	25,40	12,70	241,60	247,00	MD 250/225x25,4
250,00	225,00	31,50	6,60	246,00	249,00	MD 250/225x31,5
250,00	230,00	31,50	9,20	246,00	249,40	MD 250/230x31,5
260,00	235,00	25,40	12,70	252,90	257,00	MD 260/235x25,4

Piston Seal
MD

D H9	d h9	E +0,2	H +0,1	d1 h9	d2 h11	Part N°.
275,00	250,00	31,50	6,60	271,00	274,00	MD 275/250x31,5
280,00	250,00	35,40	9,52	272,90	277,85	MD 280/250x34,4
300,00	275,00	31,50	6,60	296,00	299,00	MD 300/275x31,5
320,00	290,00	35,40	9,52	312,40	317,50	MD 320/290x35,4
320,00	290,00	36,00	12,50	312,00	317,00	MD 320/290x36

Further dimensions and imperial equivalents are available on request. Dimensions in bold correspond to DIN ISO 6547.

Example for ordering **Piston Seal** :

MD 32 / 22 x 12,5

Type
Bore diameter D
Groove diameter d
Groove width

Material key:

Sealing ring
NBR Standard mtrl
FPM

WARNING: Limits of application stated herein are standard values. They could be individually transgressed with due consideration to respective service conditions. In the event of a large duty cycle, pulsating operation and other complex operational conditions, simultaneous transgression of these values is not recommended. Due to a large variety of service conditions that may arise in course of actual use, the company does not take responsibility of or guarantee the functional accuracy of the individual components. Rights for changes are reserved.

Piston Seal
MD

Double activating of piston seals the with MD series which have been specially manufactured for use in mounting grooves as per DIN ISO 6547. Compact design allows the sealing and the sliding function to be restricted in the groove.

Careful choice of materials renders the product serviceable in extreme service conditions.
Notice the following:All ISO 6547 part numbers end with an* Example: MD25/15x12,5*

Special Features:

- Series specially meant for mounting as per DIN ISO 6547
- The 5 piece piston seal is made to make it possible with snap when mounting.
- Sealing components from special wear resistant NBR compound.
- Resistant to torsion through form locking combination of sliding-support and sealing ring.
- Heavy duty slide rings with pressure relief grooves.

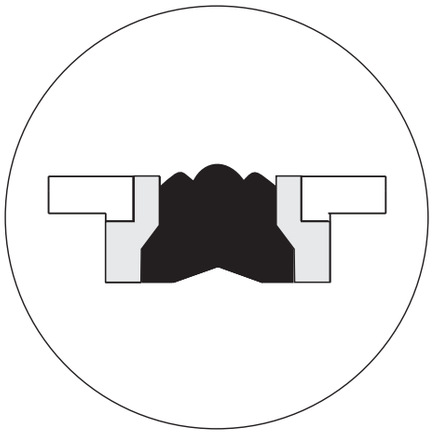

Material	: modified NBR
Operating pressure	: up to 40 MPa
Velocity	: reciprocating to 0.5 m/s
Temperature	: -30 to +110 °C

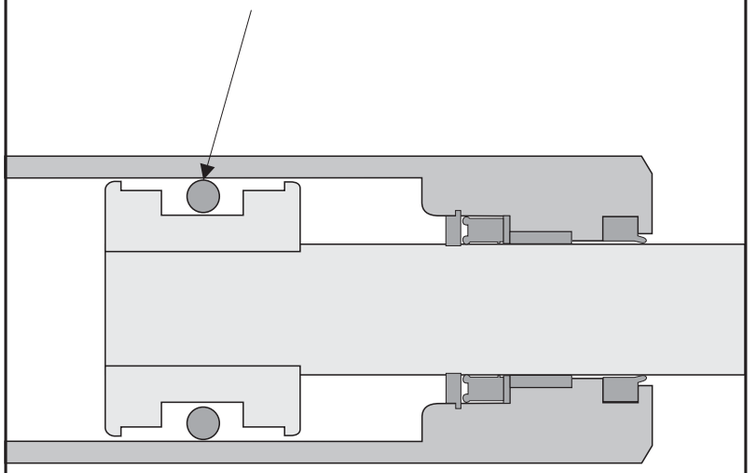

Piston Seal
MD

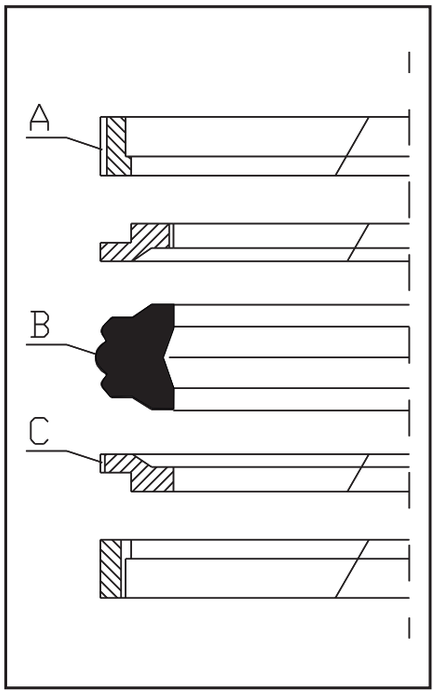

Guide Ring - Part A

Material: Pom

Short insides of the split/partitioned slide rings guarantee extremely simple assembly on single piece pistons. The practical design facilitates optimal distribution of transverse forces/shear forces that come into play. Axial unloading grooves ensure a shorter response time of the seal in case of quick changes in load. Specially designed materials ensure high pressure stability, even in case of variable thermal conditions. Low finishing tolerances ensure better piston sliding and optimize the seal function.

Sealing Ring- Part B

Material: NBR

Sturdy sealing ring from highly wear-resistant NBR are proven to be superior due to low compression strain and high tensile strength. Out of the three sealing edges, the larger one in the middle serves as the primary seal, and the two smaller external lips serve as a pre-seal. The broad clamping area is taken up by static sealing of the groove diameter and rubber part.

Specially designed angular shoulders incorporated on both sides eliminate the pos-sibility of turning of the sealing element in the event of shocks.

Support Ring - Part C

Material: Polyester-Elastomer

Both support rings together are produced to the required form and force locking arrangements between sealing element and sliding ring. Special material and close tolerances prevent extrusion of the sliding elements.
Pressure relief grooves on the dynamic side eliminates pressure concentration even with quick load variations.

Double acting piston seals of the MD series are specifically manufactured for use in appli cations designed as per DIN ISO 6547. Universal range of applications ranging from low pressure applications to heavy hydraulic is an advantage.

Piston Seal
MD

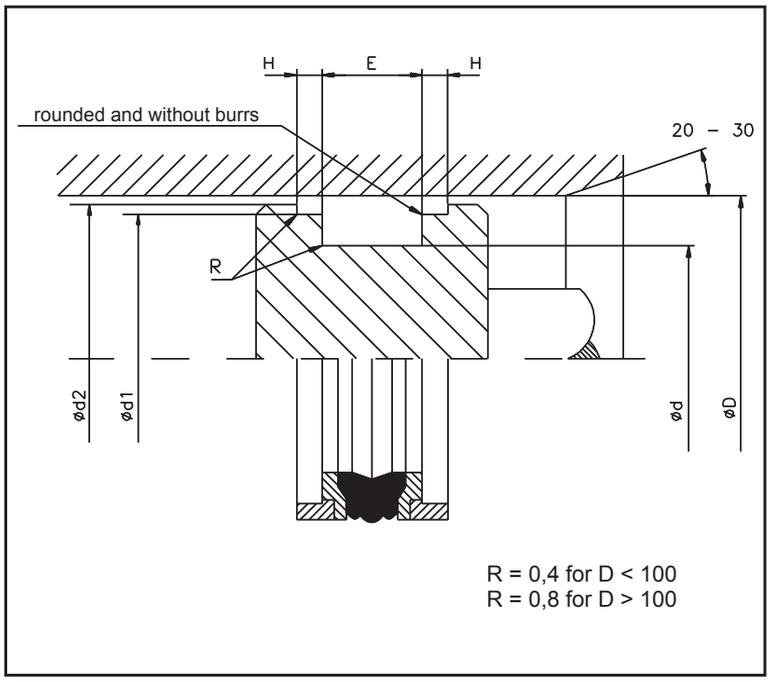

Limitations on Use

Maximum allowable operational pressure depending on the rubbing speed and temperature range of application as given below:

Vmax [m/s]	Application Temperature [°C]		
	-30 +60	-30 +80	-30 +110
0,50	25 MPa	16 MPa	10 Mpa
0,15	40 MPa	25 MPa	16 MPa

Media for Use

Mineral oil based hydraulic oils, flame resistant pressure media and emulsions (HFA, HFB, HFC), Bio Oils.

Surface Finish

Surfaces	Rmax	Rz	Ra
Housting bore D	2,5 µm	1,6 µm	0,4 µm
Groove d	10,0 µm	6,3 µm	1,6 µm
Groove flanks or sides	16,0 µm	10,0 µm	3,2 µm

Extensive range of inch measurement diagrams available on request.

D H9	d h9	E +0,35	H +0,1	d1 h9	d2 h11	Part N°.
25,00	15,00	12,50	4,00	22,00	24,00	MD 25/15x12,5*
25,00	17,00	10,00	4,00	22,00	24,00	MD 25/17x10*
32,00	22,00	12,50	4,00	29,00	31,00	MD 32/22x12,5*
32,00	24,00	10,00	4,00	29,00	31,00	MD 32/24x10*
40,00	30,00	12,50	4,00	37,00	39,00	MD 40/30x12,5*
40,00	32,00	10,00	4,00	37,00	39,00	MD 40/32x10*
50,00	35,00	20,00	5,00	46,00	48,50	MD 50/35x20*
50,00	40,00	12,50	4,00	47,00	49,00	MD 50/40x12,5*
63,00	48,00	20,00	5,00	59,00	61,50	MD 63/48x20*
63,00	53,00	12,50	4,00	60,00	62,00	MD 63/53x12,5*
80,00	60,00	25,00	6,30	75,00	78,00	MD 80/60x25*
80,00	65,00	20,00	5,00	76,00	78,50	MD 80/65x20*
100,00	80,00	25,00	6,30	95,00	98,00	MD 100/80x25*
100,00	85,00	20,00	5,00	96,00	98,50	MD 100/85x20*
125,00	100,00	32,00	10,00	119,00	123,00	MD 125/100x32*
125,00	105,00	25,00	6,30	120,00	123,00	MD 125/105x25*
140,00	115,00	32,00	10,00	134,00	138,00	MD 140/115x32*
140,00	120,00	25,00	6,30	135,00	138,00	MD 140/120x25*
160,00	135,00	32,00	10,00	154,00	158,00	MD 160/135x32*
160,00	140,00	25,00	6,30	155,00	158,00	MD 160/140x25*
180,00	150,00	36,00	12,50	172,00	177,00	MD 180/150x36*
200,00	170,00	36,00	12,50	192,00	197,00	MD 200/170x36*
250,00	220,00	36,00	12,50	242,00	247,00	MD 250/220x36*
320,00	290,00	36,00	12,50	312,00	317,00	MD 320/290x36*

All types were not available at the time of printing. Please enquire in case of difficulty.

Example for ordering Piston Seal for ISO 6457 :

MD 40 / 30 x 12,5*

Type
Bore diameter D
Groove diameter d
Groove Width

Material Key:

Sealing ring
NBR-Standard Material
FPM

WARNING: Limits of application stated herein are standard values. They could be individually transgressed with due consideration to respective service conditions. In the event of a large duty cycle, pulsating operation and other complex operational conditions, simultaneous transgression of these values is not recommended. Due to a large variety of service conditions that may arise in course of actual use, the company does not take responsibility of or guarantee the functional accuracy of the individual components. Rights for changes are reserved.

Piston Seal
A

Piston seals of the A series are designed to automatically exhibit very good sealing char acteristics and low friction at high stress val ues. Multiple lip type of sealing element design for the static as well as dynamic sides ensure guaranteed sealing even at low pressure.

Special Features:

- Five part construction consisting of a wear resistant NBR sealing ring, two Hytrel elastomer support rings and two POM sliding rings
- Assembly in a split piston
- Special design for closed groove in piston is available
- Outstanding uptake of pressure surges and transverse loads
- No rotation of seal components depending on the design in combination with support rings
- Available for cylinder diameter up to 350 mm

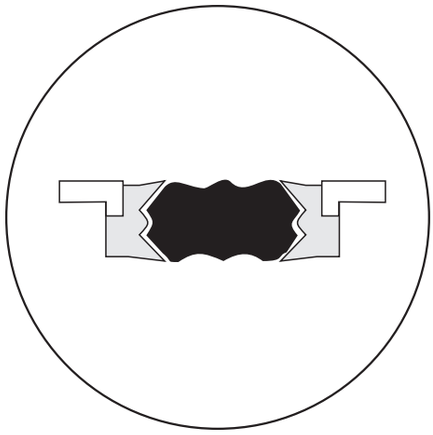

Material	:	modified NBR
Operating pressure	:	up to 40 MPa (400 bar)
Velocity	:	reciprocating to 0.5 m/s
Temperature	:	-30 to +110 °C

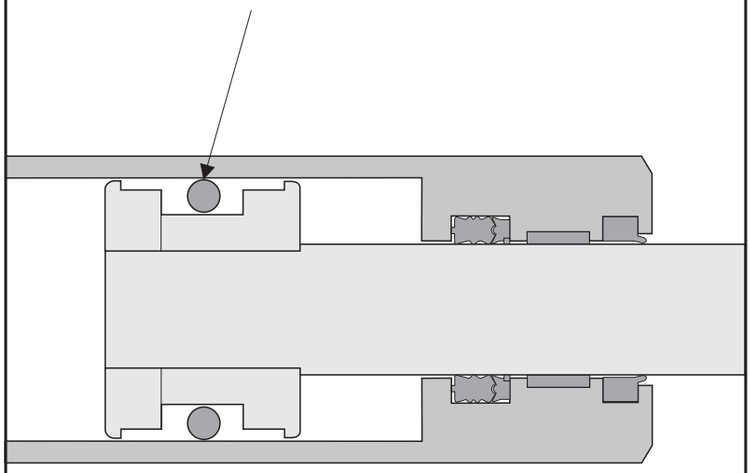

Piston Seal
A

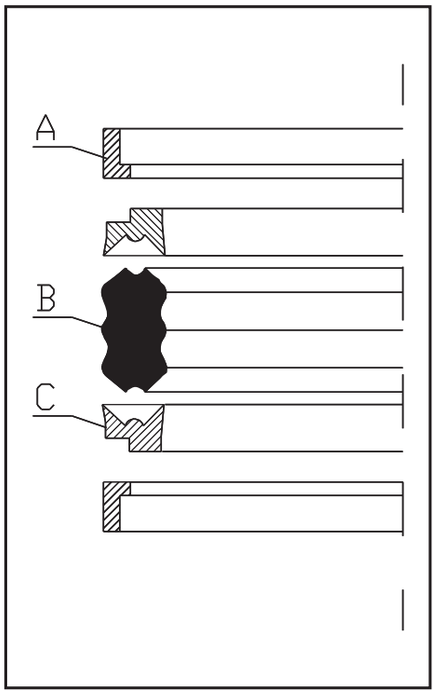

Guide Ring - Part A

Material: POM

Constructive and practical design enables proper distribution of transverse forces. Relief grooves ensure short response time of the seal in case of rapid load variations. Special material ensures high resistance to compression at variable thermic conditions.

Sealing Ring - Part B

Material: NBR

Robust sealing ring from special wear resistant NBR is characterized by low comp ression set and high tensile strength. Axial length to radial width ratio is chosen so that it is no longer possible to turn the NBR sealing in the groove.
The three sealing lips on the dynamic side ensure optimal sealability and low frictional force even when highest pressures occur. In cases of long service life the cementing of the seal is avoided by the so called "lubricant reserve" and good frictional values are achieved. five part construction consisting of a wear resistant NBR sealing

Support Ring - Part C

Material: Hytrel Elastomer

Their form of closing design with respect to slide rings and sealing components yield optimal efficiency of the multi-part piston seal. In case of an (internal) axial movement of parts themselves, displacement is not possible due to the design. Also, NBR seals are protective against dirt and the occasional diesel effect.

A is a very safe seal for the heaviest of applications. It is specially used in mobile cranes and feed cylinders (Mining engineering). A special design of this seal is also finds use in unsplit pistons.

Piston Seal
A

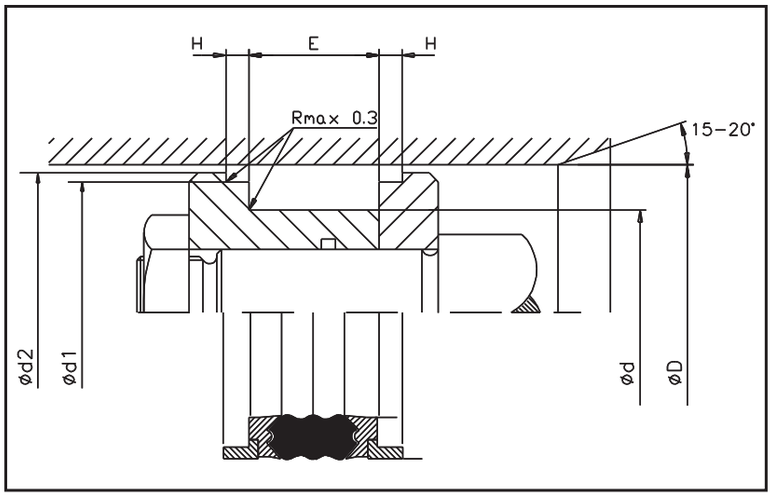

Limitations on Use

Operating Pressure: up to 70 MPa (700 bar)
Speed : reciprocating to 0.5 m/s
Temperature : -30 to +110 °C

Media for Use

Mineral oil based hydraulic oils, flame resistant pressure media and emulsions (HFA, HFB, HFC), Bio Oils.

Surface Finish

Surfaces	Rz	Ra
Housing Bore D	2,2 µm	0,4 µm
Groove d	6,0 µm	1,6 µm
Groove flanks or sides	10,3 µm	3,2 µm

D H11	d sj11	E +0,35	H +0,1	d1 h8	d2 h11	Part N°.
45,00	29,00	32,00	6,35	38,77	43,85	A 45/29x32
50,00	34,00	32,00	6,35	43,77	47,85	A 50/34x32
55,00	40,00	32,00	6,35	48,77	52,85	A 55/40x32
60,00	44,00	32,00	6,35	53,80	57,80	A 60/44x32
63,00	47,00	32,00	6,35	56,74	60,81	A 63/47x32
65,00	49,00	32,00	6,35	58,70	62,80	A 65/49x32
70,00	50,00	35,00	9,52	62,62	67,54	A 70/50x35
75,00	55,00	35,00	9,52	67,70	72,54	A 75/55x35
80,00	60,00	35,00	9,52	72,62	77,52	A 80/60x35
80,00	64,00	32,00	9,52	72,62	77,52	A 80/64x32
85,00	65,00	35,00	9,52	77,62	82,54	A 85/65x35
90,00	70,00	35,00	9,52	82,58	87,79	A 90/70x35
90,00	74,00	32,00	9,52	82,87	87,79	A 90/74x32
95,00	75,00	35,00	9,52	87,60	92,50	A 95/75x35
100,00	80,00	35,00	9,52	92,60	97,50	A 100/80x35
110,00	85,00	45,00	12,70	101,82	107,33	A 110/85x45
110,00	90,00	35,00	9,52	102,70	107,51	A 110/90x35
115,00	90,00	45,00	12,70	106,82	112,33	A 115/90x45
120,00	95,00	45,00	12,70	111,82	117,33	A 120/95x45
120,00	100,00	35,00	9,52	112,80	117,51	A 120/100x35
125,00	100,00	45,00	12,70	116,82	122,33	A 125/100x45
130,00	105,00	45,00	12,70	121,82	127,33	A 130/105x45
130,00	110,00	35,00	9,52	122,70	127,33	A 130/110x35
135,00	110,00	45,00	12,70	126,82	132,33	A 135/110x45
140,00	115,00	45,00	12,70	131,72	137,30	A 140/115x45
140,00	120,00	35,00	9,52	132,70	137,30	A 140/120x35
145,00	120,00	45,00	12,70	136,72	142,30	A 145/120x45
150,00	125,00	45,00	12,70	141,72	147,30	A 150/125x45
160,00	135,00	45,00	12,70	151,72	157,10	A 160/135x45
170,00	140,00	45,00	12,70	163,00	167,87	A 170/140x45
180,00	155,00	45,00	12,70	171,60	177,10	A 180/155x45
185,00	160,00	45,00	12,70	176,72	182,10	A 185/160x45
190,00	165,00	45,00	12,70	181,72	187,10	A 190/165x45
200,00	175,00	45,00	12,70	191,72	197,10	A 200/175x45
210,00	185,00	45,00	12,70	201,60	207,10	A 210/185x45
220,00	195,00	45,00	12,70	211,60	217,10	A 220/195x45
230,00	205,00	45,00	12,70	221,72	227,10	A 230/205x45
240,00	215,00	45,00	12,70	231,72	237,10	A 240/215x45
250,00	225,00	45,00	12,70	241,72	247,10	A 250/225x45
260,00	235,00	45,00	12,70	251,72	257,10	A 260/235x45
270,00	245,00	45,00	12,70	261,72	267,10	A 270/245x45
280,00	255,00	45,00	12,70	271,72	277,10	A 280/255x45
290,00	265,00	45,00	12,70	281,72	287,10	A 290/265x45
300,00	275,00	45,00	12,70	291,72	297,10	A 300/275x45
350,00	325,00	45,00	12,70	341,72	347,10	A 350/325x45

Extensive range of inch measurement diagrams available on request.

Piston Seal
A

Example for ordering Piston Seal:

A 70 / 50 x 35

Type
Bore diameter D
Groove diameter d
Groove width

Material Key:

Sealing ring
NBR-standard material
FPM

WARNING: Limits of application stated herein are standard values. They could be individually transgressed with due consideration to respective service conditions. In the event of a large duty cycle, pulsating operation and other complex operational conditions, simultaneous transgression of these values is not recommended. Due to a large variety of service conditions that may arise in course of actual use, the company does not take responsibility of or guarantee the functional accuracy of the individual components. Rights for changes are reserved.

Piston Seal
SM

Fibre reinforced NBR compact seal SM is double acting: Uses range from intermediate to high stress. Larger tolerances are possible due to radial prestress. Split extrusion avoided due to choice of material in combination with NBR and fabric reinforcement on dynamic side.

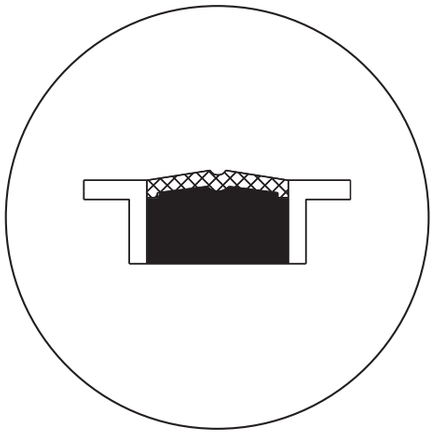

Special Features:

- Three part composition consisting of reinforced fabric-elastomer combination and POM slide rings.
- Assembly for single part piston possible
- Reduced friction characteristic due to fabric reinforcement. Resistant to galling.
- Good resistance of pressure and vibrations.
- Has a small total width.
- Also available in FPM material.

Material	: NBR reinforced fabric
Operating pressure	: up to approx. 25 MPa (250 bar)
Velocity	: reciprocating to 0,5 m/s
Temperature	: -30 to +110 °C

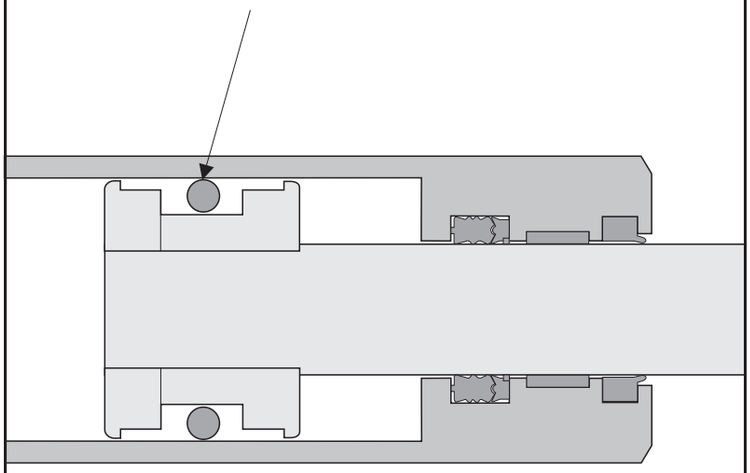

Piston Seal
SM

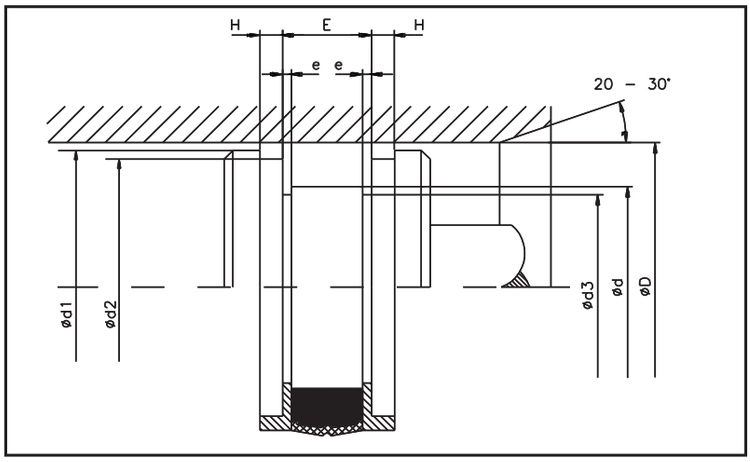

Limitations on Use

Operating pressure maximum 40 MPs (400 bar)
Speed : reciprocating to 0,5 m/s
Temperature : -30 to +110 °C

Media for Use

Mineral oil based hydraulic oil, flame resistant pressure media and emulsions (HFA, HFB, HFC), Bio Oils.

Surface Finish

Surfaces	Rz	Ra
Housing bore D	2,2 µm	0,4 µm
Groove d	6,0 µm	1,6 µm
Groove flanks or sides	10,0 µm	3,2 µm

D H11	d h11	E +0,2	H +0,1	d1 ±0,2	d2 d9	d3 -0,1	e +0,1	Part N°.
35,00	27,00	15,50	3,20	34,40	31,00	24,00	3,10	SM 35/27x15,5
40,00	32,00	15,50	3,20	39,40	36,00	29,00	3,10	SM 40/32x15,5
45,00	37,00	15,50	3,20	44,40	41,00	34,00	3,10	SM 45/37x15,5

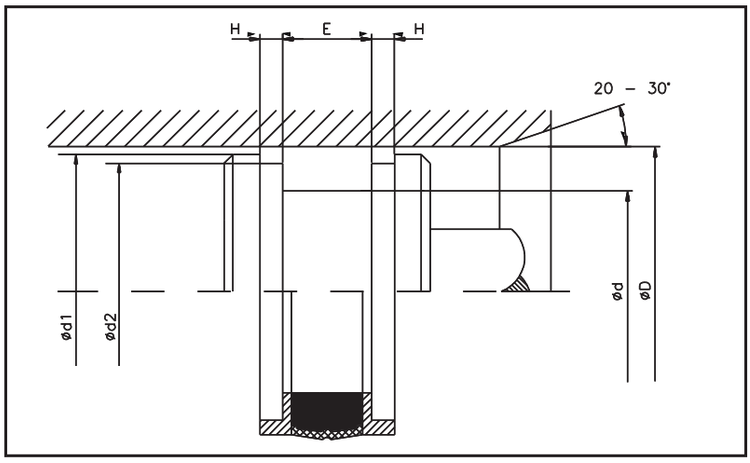

Limitations on Use

Operating pressure maximum 40 MPs (400 bar)
Speed : reciprocating to 0,5 m/s
Temperature : -30 to +110 °C

Media for Use

Mineral oil based hydraulic oil, flame resistant pressure media and emulsions (HFA, HFB, HFC), Bio Oils.

Surface Finish

Surfaces	Rz	Ra
Housing bove D	2,2 µm	0,4 µm
Groove d	6,0 µm	1,6 µm
Groove flanks or sides	10,0 µm	3,2 µm

D H11	d h11	E +0,2	H +0,1	d1 ±0,2	d2 d9	Part N°.
25,00	17,00	13,50	3,20	24,40	21,00	SM 25/17x13,5
30,00	22,00	13,50	3,20	29,40	26,00	SM 30/22x13,5
32,00	24,00	15,50	3,20	31,40	28,00	SM 32/24x15,5
35,00	27,00	15,50	3,20	34,40	31,00	SM 35/27x15,5
40,00	32,00	15,50	3,20	39,40	36,00	SM 40/32x15,5
45,00	37,00	15,50	3,20	44,40	41,00	SM 45/37x15,5
50,00	38,00	20,50	4,20	49,40	46,00	SM 50/38x20,5
60,00	48,00	20,50	4,20	59,40	56,00	SM 60/48x20,5
63,00	51,00	20,50	4,20	62,40	59,00	SM 63/51x20,5
70,00	58,00	20,50	4,20	69,40	66,00	SM 70/58x20,5
80,00	66,00	22,50	5,20	79,40	76,00	SM 80/66x22,5
90,00	76,00	22,50	5,20	89,40	86,00	SM 90/76x22,5
100,00	86,00	22,50	5,20	99,40	96,00	SM 100/86x22,5
110,00	96,00	22,50	5,20	109,40	106,00	SM 110/96x22,5
120,00	106,00	22,50	5,20	119,40	116,00	SM 120/106x22,5
125,00	108,00	26,50	7,20	124,40	121,00	SM 125/108x26,5
140,00	123,00	26,50	7,20	139,40	136,00	SM 140/123x26,5
150,00	133,00	26,50	7,20	149,40	146,00	SM 150/133x26,5

Further and intermediate sizes as well as an extensive range of inch measurement diagrams available on request.

Piston Seal
SM

Example for ordering Piston Seal:

SM 32 / 24 x15.5

Type
Bore diameter D
Groove diameter d
Groove width

Material Key:

Sealing ring
NBR
FPM

WARNING: Limits of application stated herein are standard values. They could be individually transgressed with due consideration to respective service conditions. In the event of a large duty cycle, pulsating operation and other complex operational conditions, simultaneous transgression of these values is not recommended. Due to a large variety of service conditions that may arise in course of actual use, the company does not take responsibility of or guarantee the functional accuracy of the individual components. Rights for changes are reserved.

Piston Seal
TDE

Double action piston seal TDE is traditionally produced in fabric reinforced rubber combinations used in intermediate to very high stress application. Larger tolerances can be chosen by using NBR fabric combinations on one hand and radial pre stressing on the other. This material combination avoids split extrusion due to high impact pressure.

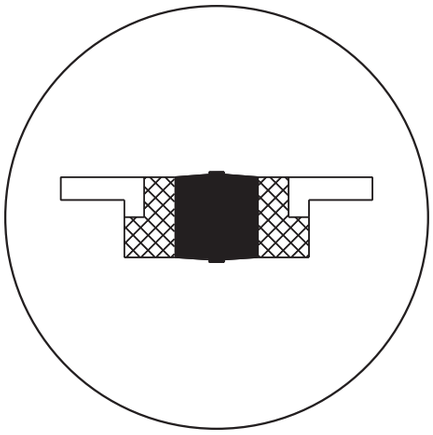

Special Features:

- Three part composition from fibre and elastomer reinforced combination and POM slide ring.
- Assembly on multiple part pistons.
- Assured sliding due to the type of closed sealing component and slide rings on both sides.
- Good resistanc of pressure and vibration.
- Reduced stick slip tendency due to fabric component on dynamic side.
- Modified NBR resulting in high friction resistance.
- Has a small total width.
- Also available in FPM material.

Material	: NBR fibre reinforced
Operating pressure	: up to 50 MPa (500 bar)
Velocity	: reciprocating to 0.5 m/s
Temperature	: -30 to +110 °C

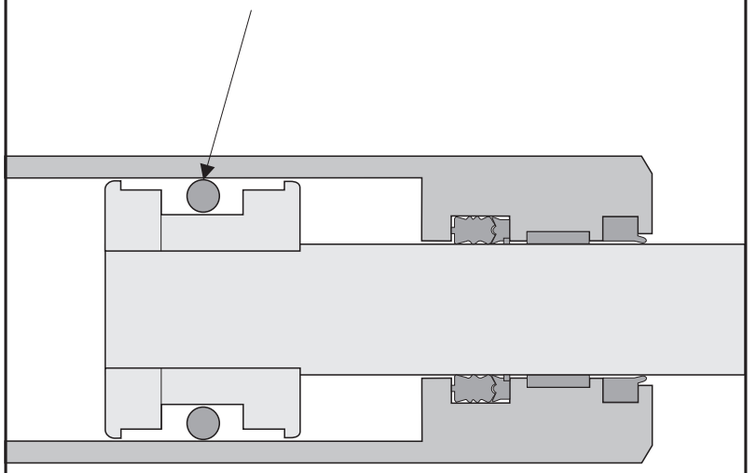

Piston Seal
TDE

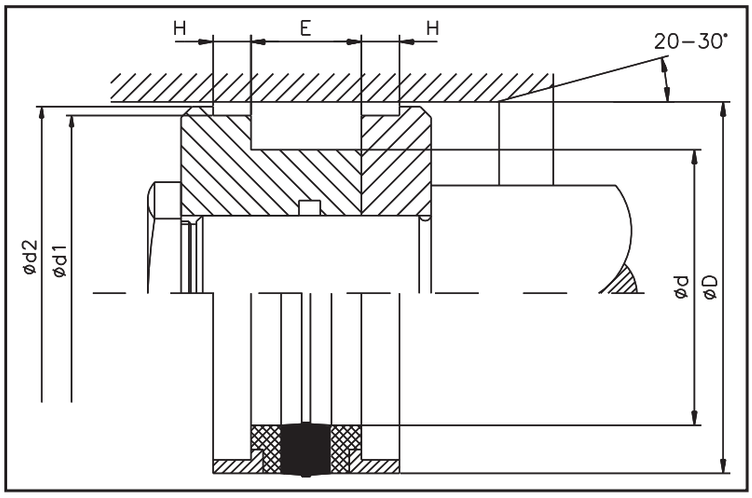

Limitations on Use

Operating Pressure maximum 50 MPa (500 bar)
Velocity : reciprocating to 0.5 m/s
Temperature : -30 to +110 °C

Media for Use

Mineral oil based hydraulic oils, flame resistant pressure media and emulsions (HFA, HFB, HFC), Bio Oils.

Surface Finish

Surfaces	Rz	Ra
Housing Bore	2,2 µm	0,4 µm
Groove d	4,0 µm	0,8 µm
Groove flanks or sides	8,0 µm	1,8 µm

D H11	d js11	E +0,35	H +0,1	d1 h9	d2 h11	Part N°.
30,00	17,00	15,40	6,35	26,50	29,00	TDE 30/17x15,4
35,00	22,00	15,40	6,35	31,40	33,70	TDE 35/22x15,4
40,00	24,00	18,40	6,35	35,40	38,70	TDE 40/24x18,4
45,00	29,00	18,40	6,35	40,40	43,70	TDE 45/29x18,4
50,00	34,00	18,40	6,35	45,40	48,70	TDE 50/34x18,4
55,00	39,00	18,40	6,35	50,40	53,70	TDE 55/39x18,4
60,00	44,00	18,40	6,35	55,40	58,70	TDE 60/44x18,4
63,00	47,00	19,40	6,35	58,40	61,70	TDE 63/47x19,4
65,00	50,00	18,40	6,35	60,40	63,70	TDE 65/50x18,4
70,00	50,00	22,40	6,35	64,20	68,30	TDE 70/50x22,4
75,00	55,00	22,40	6,35	69,20	73,30	TDE 75/55x22,4
75,00	56,00	24,40	6,35	69,20	73,30	TDE 75/56x24,4
80,00	60,00	22,40	6,35	74,20	78,30	TDE 80/60x22,4
83,00	63,00	22,40	6,35	76,16	81,30	TDE 83/63x22,4
85,00	65,00	22,40	6,35	79,20	83,30	TDE 85/65x22,4
90,00	70,00	22,40	6,35	84,15	88,30	TDE 90/70x22,4
95,00	75,00	22,40	6,35	89,15	93,30	TDE 95/75x22,4
100,00	75,00	22,40	6,35	93,15	98,05	TDE 100/75x22,4
100,00	80,00	25,40	6,35	94,15	98,31	TDE 100/80x25,4
105,00	80,00	22,40	6,35	98,10	103,00	TDE 105/80x22,4
110,00	85,00	22,40	6,35	103,10	108,00	TDE 110/85x22,4
110,00	85,00	25,40	6,35	103,10	108,00	TDE 110/85x25,4
110,00	90,00	25,40	6,35	104,15	108,30	TDE 110/90x25,4
115,00	90,00	22,40	6,35	108,10	113,00	TDE 115/90x22,4
120,00	95,00	22,40	6,35	113,10	118,00	TDE 120/95x22,4
120,00	100,00	25,40	6,35	114,10	118,30	TDE 120/100x25,4
125,00	100,00	25,40	6,35	118,10	123,00	TDE 125/100x25,4
125,00	100,00	32,40	6,35	118,10	123,00	TDE 125/100x32,4
125,00	105,00	25,40	6,35	119,15	123,30	TDE 125/105x25,4
130,00	105,00	25,40	6,35	123,10	128,00	TDE 130/105x25,4
135,00	110,00	25,40	6,35	128,10	133,00	TDE 135/110x25,4
140,00	115,00	25,40	6,35	133,00	138,00	TDE 140/115x25,4
140,00	120,00	25,40	6,35	134,10	138,30	TDE 140/120x25,4
145,00	120,00	25,40	6,35	138,30	142,95	TDE 145/120x25,4
150,00	120,00	38,40	6,35	143,00	148,00	TDE 150/120x38,4
150,00	125,00	25,40	6,35	143,00	148,00	TDE 150/125x25,4
155,00	130,00	25,40	6,35	148,00	153,00	TDE 155/130x25,4
160,00	130,00	25,40	6,35	153,00	157,90	TDE 160/130x25,4
170,00	140,00	25,40	6,35	162,95	167,87	TDE 170/140x25,4
180,00	160,00	31,40	6,35	172,95	177,87	TDE 180/160x31,4
180,00	150,00	35,40	6,35	172,95	177,87	TDE 180/150x35,4

Piston Seal
TDE

D H11	d js11	E +0,35	H +0,1	d1 h9	d2 h11	Part N°.
190,00	160,00	35,40	6,35	182,93	187,87	TDE 190/160x35,4
200,00	170,00	35,40	6,35	192,96	197,84	TDE 200/170x35,4
210,00	180,00	32,40	6,35	202,72	207,87	TDE 210/180x32,4
220,00	190,00	35,40	6,35	212,70	217,90	TDE 220/190x35,4
250,00	220,00	35,40	6,35	242,90	247,86	TDE 250/220x35,4

Above sizes/dimensions also available in FPM.
Further sizes/imperial units as well as an extensive range of inch measurement diagrams available on request.

Example for ordering Piston Seal :

TDE 70 / 50 x 22,4

Type
Bore diameter D
Groove diameter d
Groove width

Material Key:

Sealing ring
NBR
FPM

WARNING: Limits of application stated herein are standard values. They could be individually transgressed with due consideration to respective service conditions. In the event of a large duty cycle, pulsating operation and other complex operational conditions, simultaneous transgression of these values is not recommended. Due to a large variety of service conditions that may arise in course of actual use, the company does not take responsibility of or guarantee the functional accuracy of the individual components. Rights for changes are reserved.

Single Acting Piston Seal
SW+RR

The construction of the single acting piston seal series SW+RR and the material of construction ensure reliable sealing with least friction.

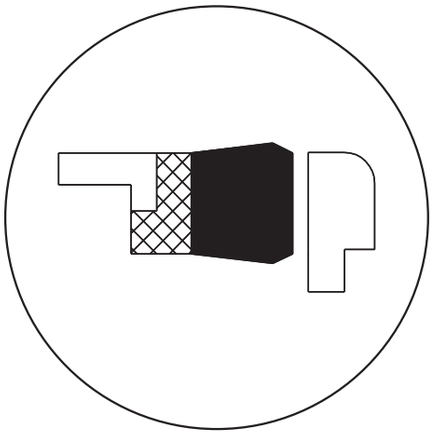

Special Features:

- Two part composition comprising of sealing ring and guide ring
- Good shear characteristics due to optimal lip design
- Easy slide fit assembly
- Good abrasion resistance of the NBR fabric sealing ring
- Special split safety ring for seal adjustment

Material	: NBR fibre reinforced
Operating pressure	: up to 40 MPa (400 bar)
Velocity	: reciprocating to 0.5 m/s
Temperature	: -30 to +110 °C

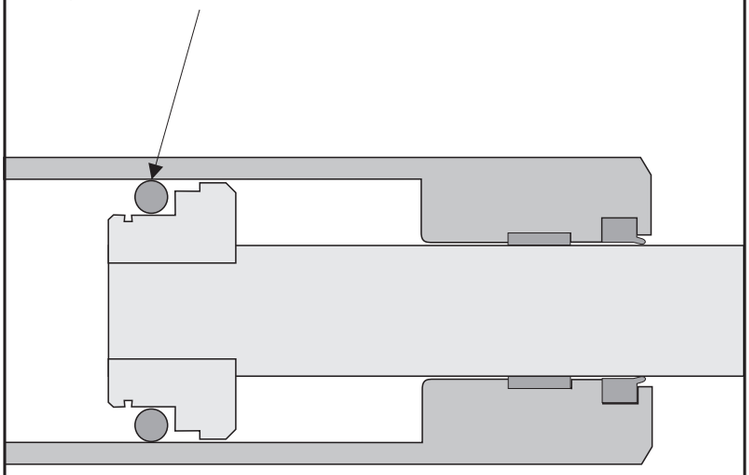

Single Acting Piston Seal
SW+RR

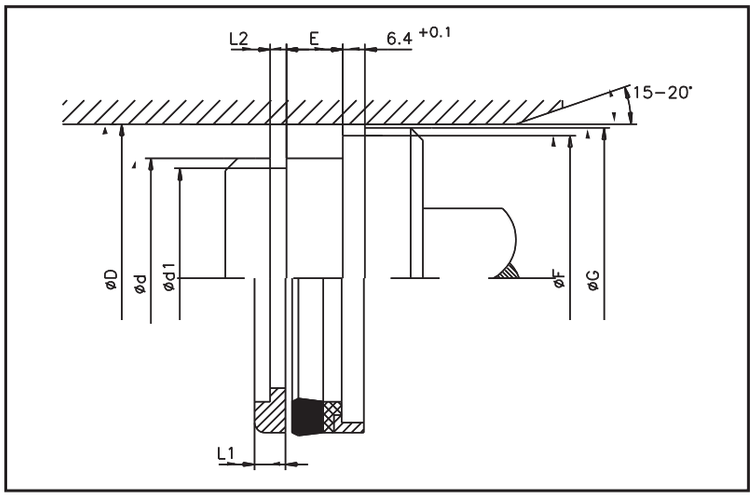

Limitations on Use

Operating Pressure	maximum 40 MPa (400 bar)
Velocity	: reciprocating to 0.5 m/s
Temperature	: -30 to +110 °C

Media for Use

Mineral oil based hydraulic oils, flame resistant pressure media and emulsions (HFA, HFB, HFC), Bio Oils.

Surface Finish

Surfaces	Rz	Ra
Housing bore D	2,0 µm	0,3 µm
Groove d	4,0 µm	0,8 µm
Groove flanks	8,0 µm	1,8 µm

D H10	d h10	E +0,3	F h8	G ±0,1	d1 ±0,2	L1	L2 +0,2	Part N°.
32,00	20,00	10,00	28,50	30,90	15,60	6,00	3,10	SW+RR 32/20x10
40,00	26,00	9,50	35,40	38,70	21,60	6,00	3,10	SW+RR 40/26x9,5
45,00	35,00	9,00	42,00	43,99	30,60	6,00	3,10	SW+RR 45/35x9
50,00	30,00	14,50	44,30	48,30	25,60	6,50	3,30	SW+RR 50/30x14,5
50,00	35,00	11,00	45,45	48,70	30,60	6,00	3,10	SW+RR 50/35x11
50,00	40,00	10,50	46,20	48,70	35,60	5,00	2,60	SW+RR 50/40x10,5
55,00	40,00	11,00	50,40	53,70	35,60	6,00	3,10	SW+RR 55/40x11
60,00	40,00	14,50	54,20	58,30	35,60	6,50	3,30	SW+RR 60/40x14,5
63,00	45,00	11,00	58,40	61,60	40,60	6,00	3,10	SW+RR 63/45x11
65,00	45,00	14,50	59,20	63,40	40,60	6,50	3,30	SW+RR 65/45x14,5
65,00	50,00	11,00	60,40	63,22	45,60	6,00	3,10	SW+RR 65/50x11
70,00	50,00	14,50	64,20	68,30	45,60	6,50	3,30	SW+RR 70/50x14,5
80,00	60,00	14,50	74,20	78,30	55,60	6,50	3,30	SW+RR 80/60x14,5
85,00	70,00	12,50	80,30	83,60	65,60	6,00	3,10	SW+RR 85/70x12,5
90,00	70,00	14,50	84,20	88,30	65,60	6,50	3,30	SW+RR 90/70x14,5
95,00	75,00	14,50	89,20	93,30	70,60	6,50	3,30	SW+RR 95/75x14,5
100,00	80,00	14,50	94,20	98,30	75,60	6,50	3,30	SW+RR 100/80x14,5
104,50	85,00	13,00	98,70	102,80	80,60	6,00	3,10	SW+RR 104,5/85x13
104,50	85,00	14,50	98,80	102,47	80,60	6,50	3,30	SW+RR 104,5/85x14,5
105,00	85,00	13,00	99,10	103,30	80,60	6,50	3,30	SW+RR 105/85x13
105,00	85,00	14,50	99,10	103,30	80,60	6,50	3,30	SW+RR 105/85x14,5
110,00	90,00	13,00	104,10	108,30	85,60	6,50	3,30	SW+RR 110/90x13
115,00	95,00	14,50	109,00	112,85	90,60	6,50	3,30	SW+RR 150/95x14,5
120,00	100,00	13,00	114,10	118,30	95,60	6,50	3,30	SW+RR 120/100x13
125,00	100,00	14,50	118,10	122,96	95,60	6,50	3,30	SW+RR 125/100x14,5
125,00	105,00	12,50	119,30	123,31	100,60	6,50	3,30	SW+RR 125/105x12,5
130,00	110,00	12,50	123,24	127,96	105,60	6,50	3,30	SW+RR 130/110x12,5

Above sizes/dimensions also available in FPM.
Further sizes/imperial units as well as an extensive range of inch measurement diagrams available on request.

Single Acting Piston Seal
SW+RR

Example for ordering Piston Seal:

SW+RR 50 / 30 x 14,5

Type
Bore diameter D
Groove diameter d
Groove width

Material Key:

Sealing ring
NBR
FPM

WARNING: Limits of application stated herein are standard values. They could be individually transgressed with due consideration to respective service conditions. In the event of a large duty cycle, pulsating operation and other complex operational conditions, simultaneous transgression of these values is not recommended. Due to a large variety of service conditions that may arise in course of actual use, the company does not take responsibility of or guarantee the functional accuracy of the individual components. Rights for changes are reserved.

Single Acting Piston Seal
CH

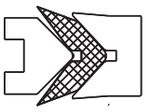

Gland-seals sets have been standard equipments for intermediate to very high stress applications for a number of years. Their robustness against dirt and impact pressures as well as their excellent endurance life render them problem-free.

Special Features:

- Three part construction consisting of a topv-ring-bottom ring
- Assembly on single part piston
- Anti wear fabric design of v-rings
- Assured use in case of large tolerances
- Gland-seal sets also available in FPM.

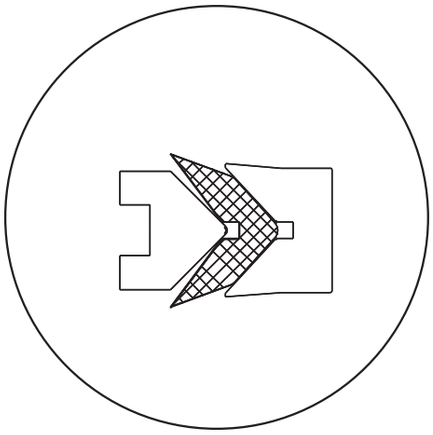

Material	: NBR fibre reinforced
Operating pressure	: up to 40 MPa (400 bar)
Velocity	: reciprocating to 0.5 m/s
Temperature	: -30 to +110 °C

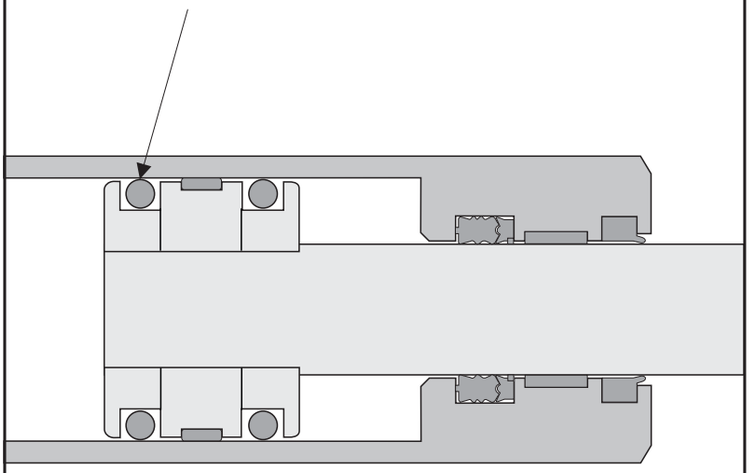

Single Acting Piston Seal
CH

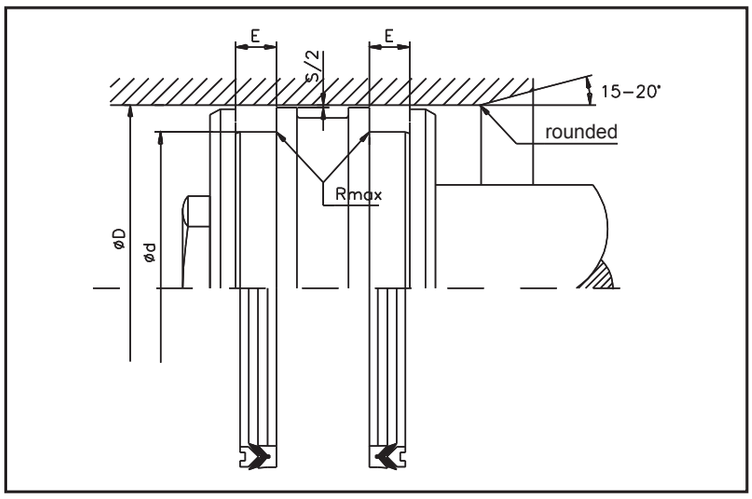

Limitations on Use

Operating pressureup to 40 MPa (400 bar)
Velocity : reciprocating to max. 0.5 m/s
Temperature : -30 to +110 °C (material NBR)
: -10 to +150 °C ((material FPM)

Media for Use

Mineral oil based hydraulic oils, flame resistant pressure media and emulsions (HFA, HFB, HFC). Bio Oils.

Surface Finish

Surfaces	Rz	Ra
Housing bore D	1,2 µm	0,3 µm
Groove d	6,3 µm	1,8 µm
Groove flanks	10,0 µm	3,2 µm

D H10	d h10	E +0,3	Part N°.
20,00	10,00	9,30	CH3 20/10x9,3
22,00	12,00	9,30	CH3 22/12x9,3
25,00	15,00	9,30	CH3 25/15x9,3
28,00	18,00	9,30	CH3 28/18x9,3
30,00	20,00	9,30	CH3 30/20x9,3
32,00	20,00	10,90	CH3 32/20x10,9
35,00	23,00	10,90	CH3 35/23x10,9
36,00	24,00	10,90	CH3 36/24x10,9
40,00	25,00	11,50	CH3 40/25x11,50
42,00	27,00	11,50	CH3 42/27x11,5
45,00	30,00	11,50	CH3 45/30x11,5
50,00	35,00	11,50	CH3 50/35x11,5
55,00	40,00	11,50	CH3 55/40x11,5
56,00	41,00	11,50	CH3 56/41x11,5
60,00	45,00	11,50	CH3 60/45x11,5
63,00	48,00	13,00	CH3 63/48x13
70,00	50,00	15,20	CH3 70/50x15,2

D H10	d h10	E +0,3	Part N°.
80,00	60,00	15,20	CH3 80/60x15,2
90,00	70,00	21,20	CH3 90/70x21,2
100,00	80,00	21,20	CH3 100/80x21,2
110,00	90,00	21,20	CH3 110/90x21,2
115,00	95,00	21,20	CH3 115/95x21,2
125,00	100,00	25,80	CH3 125/100x25,8
140,00	115,00	25,80	CH3 140/115x25,8
150,00	120,00	29,00	CH3 150/129x29
160,00	130,00	29,00	CH3 160/130x29
180,00	150,00	31,50	CH3 180/150x31,5
200,00	170,00	33,50	CH3 200/170x33,5
225,00	195,00	33,50	CH3 225/195x33,5
220,00	190,00	33,50	CH3 220/190x33,5
250,00	220,00	33,50	CH3 250/220x33,5
275,00	245,00	33,50	CH3 275/245x33,5
300,00	270,00	33,50	CH3 300/270x33,5

Above sizes also available in FPM.
Further sizes and imperial measurements as well as an extensive range of inch measurement diagrams available on request.

Example for ordering Piston Seal:

CH3 36 / 24 x10,9

Type
Bore diameter D
Groove diameter d
Groove width

Material Key:

V-ring
NBR
FPM

WARNING: Limits of application stated herein are standard values. They could be individually transgressed with due consideration to respective service conditions. In the event of a large duty cycle, pulsating operation and other complex operational conditions, simultaneous transgression of these values is not recommended. Due to a large variety of service conditions that may arise in course of actual use, the company does not take responsibility of or guarantee the functional accuracy of the individual components. Rights for changes are reserved.

Single Acting Piston Seal
SAW

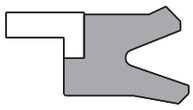

SAW is a single acting piston seal. The seal made of PU together with a guide ring integrated in the seal body gives a good functional reliability even when having a small total width.

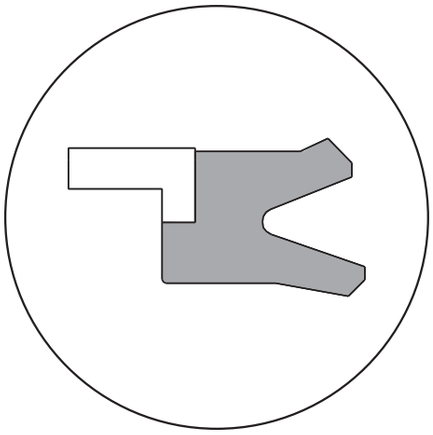

Special Features:

- Two part composition comprising of
- Polyurethan sealing component and a slotted POM guide ring
- Quick response even at low pressures
- Very good anti wear behaviour
- Also usable with single part piston.

Material	: Polyurethan
Operating pressure	: up to 40 MPa (400 bar)
Velocity	: reciprocating to 0.8 m/s
Temperature	: -40 to +110 °C

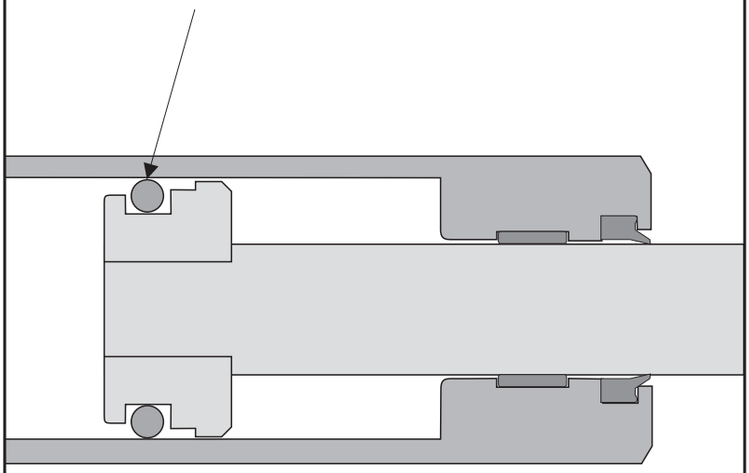

Single Acting Piston Seal
SAW

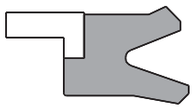

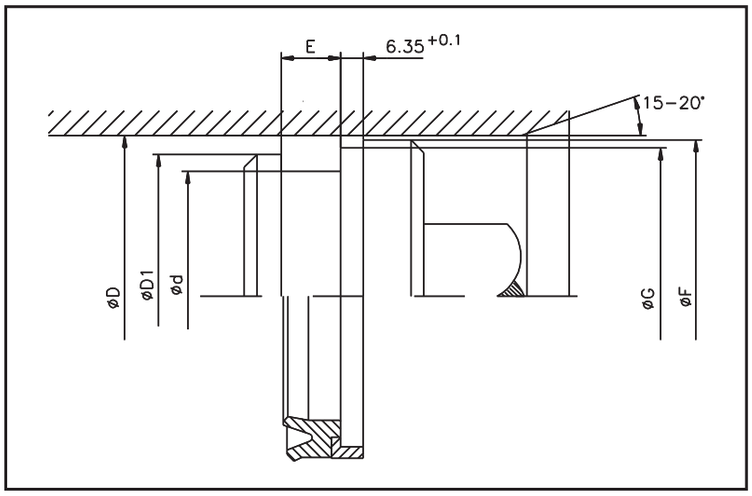

Limitations on Use

Operating pressure up to 40 MPa (400 bar)
Velocity : reciprocating up to 0.8 m/s
Ttemperature : -40 to +110 °C

Media for Use

Mineral oil based hydraulic oils, Bio Oils as well as flame resistant pressure liquids on request

Surface Finish

Surfaces	Rz	Ra
Housing bore D	2,0 µm	0,3 µm
Grooved d	6,3 µm	1,6 µm
Groove flanks	10,0 µm	3,2 µm

D H10	d h10	E +0,2	D1	F ±0,1	G h8	Part N°.
32,00	20,00	10,00	25,00	31,40	28,50	SAW 32/20x10
35,00	22,00	10,00	25,00	34,40	31,40	SAW 35/22x10
40,00	25,00	9,50	30,00	39,40	35,40	SAW 40/25x9,5
40,00	26,00	9,50	30,00	39,40	35,40	SAW 40/26x9,5
45,00	30,00	9,50	35,00	44,40	40,40	SAW 45/30x9,5
45,00	35,00	9,50	39,00	44,40	40,40	SAW 45/35x9,5
50,00	30,00	14,50	35,00	49,40	44,30	SAW 50/30x14,5
50,00	35,00	11,00	40,00	49,40	45,35	SAW 50/35x11
50,00	40,00	11,00	44,00	49,40	45,40	SAW 50/40x11
55,00	40,00	11,00	45,00	54,40	50,35	SAW 55/40x11
60,00	40,00	14,50	45,00	59,40	54,20	SAW 60/40x14,5
60,00	40,00	14,50	45,00	59,40	55,40*	SAW 60/40x14,5*
60,00	45,00	11,00	50,00	59,40	54,20	SAW 60/45x11
60,00	45,00	11,00	50,00	59,40	55,40*	SAW 60/45x11*
63,00	45,00	11,00	50,00	62,40	58,40	SAW 63/45x11
65,00	50,00	11,00	55,00	64,40	60,40	SAW 65/50x11
70,00	50,00	14,50	55,00	69,40	64,20	SAW 70/50x14,5
80,00	60,00	13,50	65,00	79,40	74,15	SAW 80/60x13,5
80,00	60,00	14,50	65,00	79,40	74,15	SAW 80/60x14,5
90,00	70,00	13,00	75,00	89,40	84,15	SAW 90/70x13
90,00	70,00	14,50	75,00	89,40	84,15	SAW 90/70x14,5
100,00	80,00	14,50	85,00	99,40	93,15	SAW 100/80x14,5
100,00	80,00	14,50	85,00	99,40	94,15*	SAW 100/80x14,5*
110,00	95,00	13,00	100,00	109,40	103,10	SAW 110/95x13
120,00	100,00	14,50	105,00	119,40	113,10	SAW 120/100x14,5
120,00	100,00	14,50	105,00	119,40	114,10*	SAW 120/100x14,5*

Example for ordering Piston Seal:

SAW 60 / 40 x 14,5

Type
Bore diameter D
Groove diameter d
Groove width

WARNING: Limits of application stated herein are standard values. They could be individually transgressed with due consideration to respective service conditions. In the event of a large duty cycle, pulsating operation and other complex operational conditions, simultaneous transgression of these values is not recommended. Due to a large variety of service conditions that may arise in course of actual use, the company does not take responsibility of or guarantee the functional accuracy of the individual components. Rights for changes are reserved.

Single Acting Piston Seal
(UN) SA

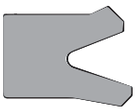

The PU seal series SA is exclusively designed for use as piston seals. The type UN can be used for both rod and piston seals.

The seals are mainly used in lower up to intermediate pressure applications. Very good sealing characteristics and significantly longer service life as against NBR materials is a feature of this product.

Special Features:

- Anti-wear modified PU mixture
- Fast and safe operation even at low temperatures due to special profile design
- Simple snap assembly in closed groove possible
- Significantly better anti extrusion behaviour compared to NBR
- Large gap between piston and seal housing is possible compared to the material nitrile
- Small assembly space
- Cost effective variant
- Extensive range of available sizes.

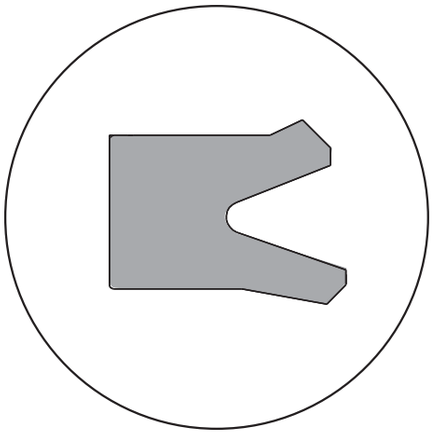

Material	: Polyurethan
Operating pressure	: up to 40 MPa (400 bar)
Velocity	: reciprocating to 0.8 m/s
Temperature	: -40 to +110 °C

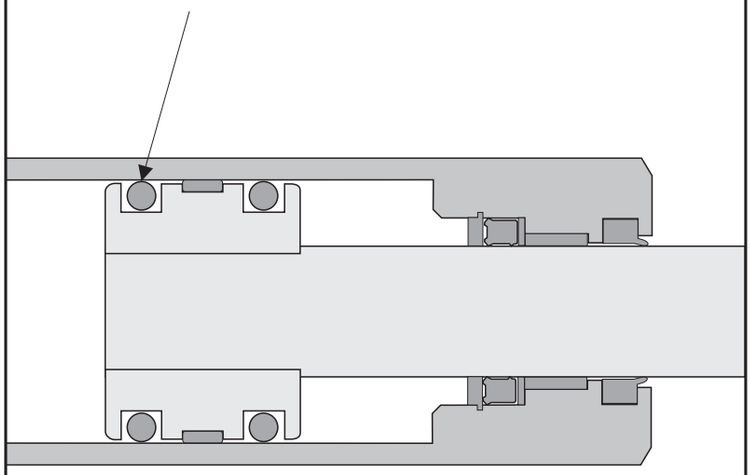

Single Acting Piston Seal
(UN) SA

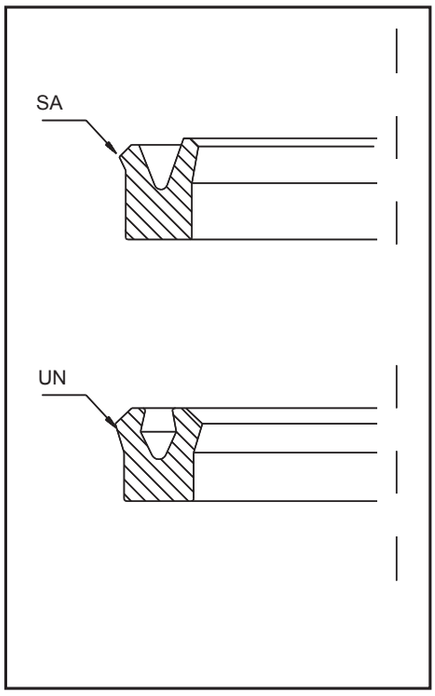

Detailed Information

SA

Asymmetric sealing lips with reduction on dynamic side cause much less friction. Prestressing of this seal is usually achieved through reduction of internal diameter.

UN

This is a standard type with characteristic groove depth. This profile is usable as both piston and rod sealing. Prestressing of sealing lip is equal on internal and external diameter.

All profiles of the series SA and UN offer specific advantages. Please contact our technical department for the variant suitable to your application. Also applicable for use in bio-oil.

Single Acting Piston Seal
(UN) SA

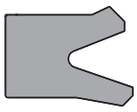

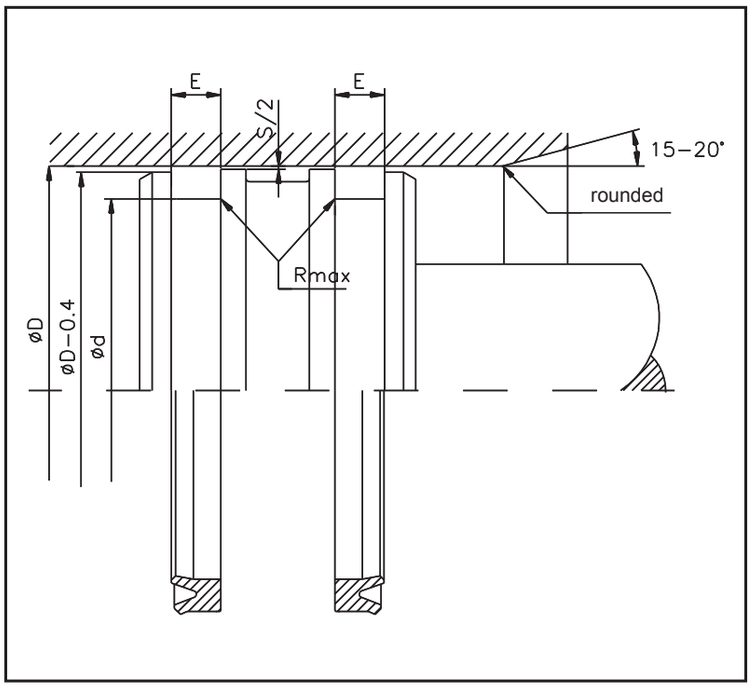

Limitations on Use

Operating pressure up to 40 MPa (400 bar)
Velocity : reciprocating up to 0.8 m/s
Ttemperature : -40 to +110 °C

Media for Use

Mineral oil based hydraulic oils, Bio Oils as well as flame resistant pressure liquids on request

Surface Finish

Surfaces	Rz	Ra
Housing bore D	2,0 µm	0,3 µm
Groove diameter d	6,3 µm	1,6 µm
Groove flanks	10,0 µm	3,2 µm

Diameter Clearance

Max. Clearance S [mm]	Max. Pressure [bar]
0,80	100
0,60	150
0,40	200
0,20	400

D H9	d h9	E +0,2	Part N°. SA	Part N°. UN
9,00	3,00	5,00		UN 3/9x5
10,00	4,00	4,50		UN 4/10x4,5
10,00	4,00	5,00		UN 4/10x5
11,00	4,50	5,50		UN 4,5/11x5,5
11,11	6,35	5,50		UN 6,35/11,1x5,5
12,00	5,00	5,50		UN 5/12x5,5
12,00	5,00	6,00	SA 12/5x6	
12,00	5,00	7,00		UN 5/12x7
12,00	5,00	6,50		UN 5/12x6,5
12,00	6,00	4,50		UN 6/12x4,5
12,00	6,00	6,00		UN 6/12x6
12,00	6,00	6,50		UN 6/12x6,5
12,00	8,00	3,50		UN 8/13x3,5
12,50	4,50	5,00		UN 4,5/12,5x5
12,70	5,00	9,00		UN 5/12,7x9
12,70	6,00	6,50		UN 6/12,7x6,5
14,00	7,00	4,20		UN 7/14x4,2
14,00	8,00	6,80	SA 14/8x6,8	
14,00	8,00	7,00		UN 8/14x7
15,00	6,00	9,00		UN 6/15x9
15,00	7,00	8,00		UN 7/15x8
15,00	8,00	6,30		UN 8/15x6,3
15,00	8,00	9,00		UN 8/15x9
15,00	9,00	9,00		UN 9/15x9
16,00	8,00	6,30		UN 8/16x6,3
16,00	10,00	6,50	SA 16/10x6,5	UN 10/16x6,5
16,00	10,00	9,00	SA 16/10x9	
17,00	5,00	10,00		UN 5/17x10
17,00	11,00	5,00		UN 11/17x5
18,00	8,00	10,00		UN 8/18x10
18,00	10,00	6,00		UN 10/18x6
18,00	10,00	7,00		UN 10/18x7
18,00	10,00	9,00		UN 10/18x9
18,00	12,00	5,50		UN 12/18x5,5

D H9	d h9	E +0,2	Part N°. SA	Part N°. UN
18,00	12,00	7,00		UN 12/18x7
19,00	9,00	7,00		UN 9/19x7
20,00	10,00	9,00		UN 10/20x9
20,00	12,00	7,50	SA 20/12x7,5	
20,00	12,00	8,00		UN 12/20x8
20,00	12,00	9,00		UN 12/20x9
20,00	14,00	5,30		UN 14/20x5,3
20,00	14,00	6,00	SA 20/14x6	
20,50	11,00	7,00		UN 11/20,5x7
22,00	8,00	9,00		UN 8/22x9
22,00	10,00	7,00		UN 10/22x7
22,00	10,00	9,00		UN 10/22x9
22,00	12,00	6,00		UN 12/22x6
22,00	12,00	8,00		UN 12/22x8
22,00	12,00	9,00	SA 22/12x9	UN 12/22x9
22,00	14,00	4,50		UN 14/22x4,5
22,00	14,00	7,00		UN 14/22x7
22,00	14,00	9,00		UN 14/22x9
22,00	14,00	12,00		UN 14/22x12
22,00	16,00	4,50		UN 16/22x4,5
22,00	16,00	5,50		UN 16/22x5,5
24,00	12,00	9,00		UN 12/24x9
24,00	12,00	10,00		UN 12/24x10
24,00	14,00	9,00		UN 14/24x9
24,00	16,00	6,00		UN 16/24x6
24,00	16,00	10,00		UN 16/24x10
25,00	10,00	11,00	SA 25/10x11	
25,00	12,00	9,00		UN 12/25x9
25,00	12,00	11,00		UN 12/25x11
25,00	15,00	9,00	SA 25/15x9	UN 15/25x9
25,00	15,00	11,00		UN 15/25x11
25,00	17,00	11,00		UN 17/25x11
25,00	18,00	5,50		UN 18/25x5,5
25,00	19,00	7,00		UN 19/25x7

Single Acting Piston Seal
(UN) SA

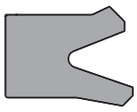

D H9	d h9	E +0,2	Part N°. SA	Part N°. UN
26,00	16,00	6,00		UN 16/26x6
26,00	16,00	9,00		UN 16/26x9
26,00	16,00	11,00		UN 16/26x11
26,00	18,00	7,50		UN 18/26x7,5
26,00	18,00	9,00		UN 18/26x9
26,00	18,00	9,50		UN 18/26x9,5
27,00	15,00	7,00		UN 15/27x7
28,00	15,00	11,00		UN 15/28x11
28,00	16,00	7,00		UN 16/28x7
28,00	18,00	9,00		UN 18/28x9
28,00	20,00	5,00		UN 20/28x5
28,00	20,00	9,00		UN 20/28x9
28,00	22,00	9,00		UN 22/28x9
29,00	20,00	5,50		UN 20/29x5,5
30,00	15,00	11,00	SA 30/15x11	
30,00	18,00	9,00		UN 18/30x9
30,00	20,00	9,00	SA 30/20x9	UN 20/30x9
30,00	20,00	11,00		UN 20/30x11
30,00	22,00	7,00	SA 30/22x7	UN 22/30x7
30,00	23,00	7,50		UN 23/30x7,5
32,00	16,00	9,00		UN 16/32x9
32,00	20,00	8,50		UN 20/32x8,5
32,00	22,00	9,00	SA 32/22x9	UN 22/32x9
32,00	22,00	11,00	SA 32/22x11	UN 22/32x11
32,00	24,00	8,00		UN 24/32x8
32,00	26,00	6,00	SA 32/26x6	
34,00	22,00	9,40	SA 34/22x9,4	
34,00	22,00	10,00	SA 34/22x10	
35,00	20,00	11,00	SA 35/20x11	
35,00	20,00	13,00		UN 20/35x13
35,00	22,00	11,00		UN 22/35x11
35,00	25,00	5,50		UN 25/35x5,5
35,00	25,00	9,00	SA 35/25x9	UN 25/35x9
35,00	25,00	11,00		UN 25/35x11
35,00	27,00	11,00	SA 35/27x11	
35,00	28,00	5,50		UN 28/35x5,5
36,00	28,00	7,50		UN 28/36x7,5
36,50	24,00	7,00	SA 36,5/24x7	
37,00	30,00	7,00		UN 30/37x7
37,00	21,00	13,00	SA 37/21x13	
38,00	25,00	11,00		UN 25/38x11
38,00	28,00	9,00		UN 28/38x9
38,00	30,00	6,50		UN 30/38x6,5
38,00	31,00	5,20	SA 38/31x5,2	
39,00	20,00	11,00		UN 20/39x11
40,00	20,00	13,00		UN 20/40x13
40,00	22,00	11,00		UN 22/40x11
40,00	24,00	9,00		UN 24/40x9
40,00	25,00	11,00	SA 40/25x11	UN 25/40x11
40,00	28,00	11,00		UN 28/40x11
40,00	30,00	5,50		UN 30/40x5,5
40,00	30,00	7,50	SA 40/30x7,5	
40,00	30,00	11,00	SA 40/30x11	UN 30/40x11
40,00	32,00	6,00		UN 32/40x6
40,00	32,00	9,00	SA 40/32x9	UN 32/40x9
40,00	33,00	9,00	SA 40/33x9	
42,00	30,00	10,00		UN 30/42x10
42,00	30,00	11,00		UN 30/42x11
42,00	32,00	11,00	SA 42/32x11	UN 32/42x11
42,00	34,50	4,70	SA 42/34,5x4,7	
43,00	25,00	10,00	SA 43/25x10	

D H9	d h9	E +0,2	Part N°. SA	Part N°. UN
44,00	20,00	12,00	SA 44/20x12	
45,00	28,50	13,00	SA 45/28,5x13	
45,00	30,00	11,00	SA 45/30x11	UN 30/45x11
45,00	32,00	11,00		UN 32/45x11
45,00	34,00	8,00		UN 34/45x8
45,00	34,00	10,00		UN 34/45x10
45,00	35,00	9,00		UN 35/45x9
45,00	35,00	11,00		UN 35/45x11
45,00	38,00	5,50		UN 38/45x5,5
46,00	36,00	8,00		UN 36/46x8
46,00	38,00	7,50		UN 38/46x7,5
48,00	35,00	11,00		UN 35/48x11
48,00	40,00	12,00		UN 40/48x12
50,00	30,00	11,00		UN 30/50x11
50,00	30,00	13,00	SA 50/30x13	UN 30/50x13
50,00	32,00	11,00	SA 50/32x11	
50,00	32,00	13,00		UN 32/50x13
50,00	34,00	15,00		UN 34/50x15
50,00	35,00	9,50	SA 50/35x9,5	
50,00	35,00	11,00	SA 50/35x11	UN 35/50x11
50,00	38,00	10,00		UN 38/50x10
50,00	40,00	5,50	SA 50/40x5,5	
50,00	40,00	7,50		UN 40/50x7,5
50,00	40,00	9,00		UN 40/50x9
50,00	40,00	11,00	SA 50/40x11	UN 40/50x11
50,00	42,00	6,00	SA 50/42x6	
50,00	42,00	9,00	SA 50/42x9	UN 42/50x9
50,00	42,00	11,00	SA 50/42x11	
50,80	40,80	8,00	SA 50,8/40,8x8	
52,00	42,00	10,00		UN 42/50x10
52,00	42,00	10,60	SA 52/42x10,6	
55,00	35,00	11,00		UN 35/55x11
55,00	35,00	13,00		UN 35/55x13
55,00	38,00	11,00		UN 38/55x11
55,00	40,00	11,00	SA 55/40x11	UN 40/55x11
55,00	45,00	7,50		UN 45/55x7,5
55,00	45,00	11,00		UN 45/55x11
55,00	47,00	6,30	SA 55/47x6,3	
56,00	40,00	11,00		UN 40/56x11
58,00	38,00	11,00		UN 28/58x11
58,00	48,00	11,00		UN 48/58x11
60,00	40,00	11,00		UN 40/60x11
60,00	40,00	13,00	SA 60/40x13	
60,00	40,00	14,00		UN 40/60x14
60,00	40,00	14,50	SA 60/40x14,5	
60,00	40,00	19,00		UN 40/60x19
60,00	45,00	11,00	SA 60/45x11	UN 45/60x11
60,00	50,00	5,50	SA 60/50x5,5	
60,00	50,00	8,00	SA 60/50x8	
60,00	50,00	11,00	SA 60/50x11	UN 50/60x11
60,00	50,00	12,00		UN 50/60x12
60,00	52,00	9,00	SA 60/52x9	
62,00	42,00	13,00		UN 42/62x13
62,00	50,00	10,00		UN 50/62x10
62,00	52,00	13,00		UN 52/62x13
63,00	43,00	13,00	SA 63/43x13	
63,00	45,00	11,00	SA 63/45x13	UN 45/63x11
63,00	48,00	11,00	SA 63/48x11	
63,00	48,00	13,00	SA 63/48x13	
63,00	50,00	7,00		UN 50/63x7
63,00	53,00	7,50		UN 53/63x7,5

Single Acting Piston Seal
(UN) SA

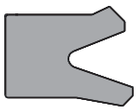

D H9	d h9	E +0,2	Part N°. SA	Part N°. UN
63,00	53,00	8,00	SA 63/53x8	
63,00	53,00	13,00	SA 63/53x13	
65,00	40,00	13,00		UN 40/65x13
65,00	45,00	11,00		UN 45/65x11
65,00	45,00	13,00	SA 65/45x13	UN 45/65x13
65,00	45,00	14,50	SA 65/45x14,5	
65,00	50,00	11,00	SA 65/50x11	UN 50/65x11
65,00	50,00	12,50	SA 65/50x12,5	
65,00	55,00	11,00	SA 65/55x11	UN 55/65x11
65,00	55,00	13,00		UN 55/65x13
65,00	55,00	14,50	SA 65/55x14,5	
68,00	48,00	11,00	SA 68/48x11	
70,00	36,00	11,00		UN 36/70x11
70,00	40,00	16,00		UN 40/70x16
70,00	50,00	11,00		UN 50/70x11
70,00	50,00	13,00	SA 70/50x13	UN 50/70x13
70,00	50,00	14,50	SA 70/50x14,5	
70,00	50,00	16,00	SA 70/50x16	
70,00	50,00	19,00		UN 50/70x19
70,00	55,00	10,50	SA 70/55x10,5	
70,00	55,00	13,00	SA 70/55x13	UN 55/70x13
70,00	60,00	8,00	SA 70/60x8	
70,00	60,00	9,00		UN 60/70x9
70,00	60,00	11,00		UN 60/70x11
70,00	60,00	13,00	SA 70/60x13	UN 60/70x13
70,00	60,00	14,50	SA 70/60x14,5	
70,00	62,00	8,50	SA 70/62x8,5	
72,00	58,00	13,00	SA 72/58x13	
75,00	40,00	11,00		UN 40/75x11
75,00	50,00	15,00	SA 75/50x15	
75,00	55,00	13,00		UN 55/75x13
75,00	55,00	14,50	SA 75/55x14,5	
75,00	60,00	11,00		UN 60/75x11
75,00	60,00	13,00		UN 60/75x13
75,00	63,00	11,00		UN 63/75x11
75,00	65,00	5,50	SA 75/65x5,5	
75,00	65,00	7,50	SA 75/65x7,5	
75,00	65,00	8,00	SA 75/65x8	
75,00	65,00	11,00	SA 75/65x11	
75,00	65,00	13,00		UN 65/75x13
75,00	65,00	14,50	SA 75/65x14,5	
76,00	66,00	9,00		UN 66/76x9
77,00	67,00	11,00		UN 67/77x11
77,00	67,00	13,00		UN 67/77x13
78,00	63,00	11,00		UN 63/78x11
80,00	55,00	13,00		UN 55/80x13
80,00	60,00	11,00		UN 60/80x11
80,00	60,00	13,00	SA 80/60x13	UN 60/80x13
80,00	60,00	14,50	SA 80/60x14,5	
80,00	60,00	19,00		UN 60/80x19
80,00	65,00	12,00		UN 65/80x12
80,00	65,00	13,00	SA 80/65x13	UN 65/80x13
80,00	66,00	11,00		UN 66/80x11
80,00	66,00	14,00		UN 66/80x14
80,00	70,00	6,00		UN 70/80x6
80,00	70,00	8,00	SA 80/70x8	
80,00	70,00	9,00		UN 70/80x9
80,00	70,00	11,00		UN 70/80x11
80,00	70,00	13,00	SA 80/70x13	UN 70/80x13
80,00	72,00	13,00	SA 80/72x13	
83,00	63,00	16,00		UN 63/83x16

D H9	d h9	E +0,2	Part N°. SA	Part N°. UN
85,00	60,00	13,50		UN 60/85x13,5
85,00	65,00	11,00		UN 65/85x11
85,00	65,00	13,00		UN 65/85x13
85,00	65,00	14,50	SA 85/65x14,5	
85,00	70,00	13,00		UN 70/85x13
85,00	75,00	11,00	SA 85/75x11	
85,00	75,00	13,00	SA 85/75x13	UN 75/85x13
90,00	60,00	16,00		UN 60/90x16
90,00	70,00	13,00	SA 90/70x13	UN 70/90x13
90,00	70,00	14,50	SA 90/70x14,5	
90,00	70,00	19,00		UN 70/90x19
90,00	75,00	8,50		UN 75/90x8,5
90,00	75,00	11,00		UN 75/90x11
90,00	75,00	13,00	SA 90/75x13	UN 75/90x13
90,00	80,00	5,50	SA 90/80x5,5	
90,00	80,00	11,00	SA 90/80x11	UN 80/90x11
90,00	80,00	13,00		UN 80/90x13
90,00	80,00	14,00	SA 90/80x14	
92,00	82,00	11,00		UN 82/92x11
93,00	78,00	11,50		UN 78/93x11,5
94,00	84,50	8,80		UN 84,5/94x8,8
95,00	70,00	13,00		UN 70/95x13
95,00	75,00	13,00		UN 75/95x13
95,00	75,00	14,50	SA 95/75x14,5	
95,00	80,00	13,00		UN 80/95x13
95,00	85,00	7,50	SA 95/85x7,5	
95,00	85,00	8,00	SA 95/85x8	
95,00	85,00	9,50	SA 95/85x9,5	UN 85/95x9,5
95,00	85,00	13,00		UN 85/95x13
95,00	85,00	14,50	SA 95/85x14,5	
100,00	80,00	11,00	SA 100/80x11	UN 80/100x11
100,00	80,00	13,00	SA 100/80x13	UN 80/100x13
100,00	80,00	14,50	SA 100/80x14,5	
100,00	85,00	12,00		UN 85/100x12
100,00	85,00	13,00	SA 100/85x13	UN 85/100x13
100,00	86,00	13,00	SA 100/86x13	
100,00	90,00	8,00	SA 100/90x8	UN 90/100x8
100,00	90,00	9,00		UN 90/100x9
100,00	90,00	11,50	SA 100/90x11,5	
100,00	90,00	13,00		UN 90/100x13
101,60	80,00	13,00	SA 101,6/80x13	
105,00	85,00	13,00		UN 85/105x13
105,00	90,00	13,00	SA 105/90x13	UN 90/105x13
110,00	90,00	13,00	SA 110/90x13	UN 90/110x13
110,00	90,00	19,00		UN 90/110x19
110,00	95,00	13,00	SA 110/95x13	UN 95/110x13
110,00	95,00	16,00		UN 95/110x16
110,00	100,00	8,00	SA 110/100x8	
110,00	100,00	14,50	SA 110/100x14,5	
112,00	95,00	12,00		UN 95/112x12
115,00	85,00	16,00		UN 85/115x16
115,00	90,00	23,00		UN 90/115x23
115,00	95,00	13,00		UN 95/115x13
115,00	95,00	19,00		UN 95/115x19
115,00	100,00	11,50	SA 115/100x11,5	
115,00	100,00	13,00		UN 100/115x13
115,00	105,00	14,50	SA 115/105x14,5	
120,00	95,00	13,00	SA 120/95x13	
120,00	100,00	13,00	SA 120/100x13	UN 100/120x13
120,00	100,00	14,50	SA 120/100x14,5	
120,00	103,00	17,00	SA 120/103x17	

Single Acting Piston Seal
(UN) SA

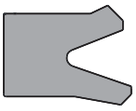

D H9	d h9	E +0,2	Part N°. SA	Part N°. UN
120,00	105,00	9,00		UN 105/120x9
120,00	105,00	16,00		UN 105/120x16
120,00	106,00	9,50		UN 106/120x9,5
125,00	100,00	13,00		UN 100/125x13
125,00	100,00	16,00		UN 100/125x16
125,00	105,00	13,00	SA 125/105x13	UN 105/125x13
125,00	105,00	15,00		UN 105/125x15
125,00	105,00	16,00	SA 125/105x16	UN 105/125x16
125,00	110,00	13,00		UN 110/125x13
125,00	110,00	16,00		UN 110/125x16
125,00	113,00	10,50		UN 113/125x10,5
125,00	115,00	8,00	SA 125/115x8	
125,00	115,00	16,00	SA 125/115x16	
126,00	115,00	16,00		UN 115/126x16
130,00	100,00	13,00		UN 100/130x13
130,00	110,00	13,00	SA 130/110x13	
130,00	110,00	16,00	SA 130/110x16	UN 110/130x16
130,00	110,00	19,00		UN 110/130x19
130,00	120,00	14,50	SA 130/120x14,5	
130,00	120,00	15,00		UN 120/130x15
135,00	115,00	16,00		UN 115/135x16
135,00	120,00	16,00		UN 120/135x16
140,00	114,00	13,00	SA 140/114x13	
140,00	115,00	16,00		UN 115/140x16
140,00	115,00	23,00		UN 115/140x23
140,00	120,00	13,00	SA 140/120x13	
140,00	120,00	16,00		UN 120/140x16
140,00	125,00	12,00		UN 125/140x12
140,00	125,00	16,00		UN 125/140x16
145,00	125,00	16,00		UN 125/145x16
145,00	125,00	19,00		UN 125/145x19
150,00	125,00	14,50	SA 150/125x14,5	
150,00	130,00	16,00	SA 150/130x16	UN 130/150x16

D H9	d h9	E +0,2	Part N° SA	Part N°. UN
150,00	135,00	16,00		UN 135/150x16
150,00	140,00	8,00	SA 150/140x8	
155,00	125,00	16,00		UN 125/155x16
155,00	135,00	16,00		UN 135/155x16
160,00	135,00	16,00		UN 135/160x16
160,00	140,00	13,00		UN 140/160x13
160,00	140,00	14,50	SA 160/140x14,5	
160,00	140,00	16,00		UN 140/160x16
160,00	148,00	7,50	SA 160/148x7,5	
165,00	145,00	16,00		UN 145/165x16
170,00	150,00	16,00	SA 170/150x16	UN 150/170x16
170,00	150,00	19,00		UN 150/170x19
174,80	165,20	7,50	SA 174,8/165,2x7,5	
180,00	160,00	14,50	SA 180/160x14,5	
180,00	160,00	16,00		UN 160/180x16
180,00	166,00	16,50	SA 180/166x16,5	
190,00	170,00	16,00	SA 190/170x16	UN 170/190x16
200,00	170,00	19,00		UN 170/200x19
200,00	175,00	16,00		UN 175/200x16
200,00	180,00	16,00		UN 180/200x16
220,00	180,00	21,00		UN 180/220x21
225,00	200,00	19,00		UN 200/225x19
245,00	225,00	16,00		UN 225/245x16
250,00	220,00	19,00		UN 220/250x19
270,00	245,00	16,00		UN 245/275x16
280,00	250,00	19,00	SA 280/250x19	
290,00	265,00	18,00		UN 265/290x18
290,00	270,00	18,00		UN 270/290x18
300,00	270,00	16,00		UN 270/300x16
300,00	280,00	16,00		UN 280/300x16
320,00	285,00	21,00	SA 320/285x21	
320,00	305,00	18,00		UN 305/320x18
390,00	360,00	23,00		UN 360/290x23

Further dimensions and intermediate sizes available on request.

Example for ordering Piston Seal :

SA 60 / 40 x 13

- Type — SA
- Bore diameter D — 60
- Groove diameter d — 40
- Groove width — 13

WARNING: Limits of application stated herein are standard values. They could be individually transgressed with due consideration to respective service conditions. In the event of a large duty cycle, pulsating operation and other complex operational conditions, simultaneous transgression of these values is not recommended. Due to a large variety of service conditions that may arise in course of actual use, the company does not take responsibility of or guarantee the functional accuracy of the individual components. Rights for changes are reserved.

Piston Seal
MSS

This double acting piston seal of series MSS is designed with highly wear resistant Nitrile rubber and two guide rings as is made of POM.

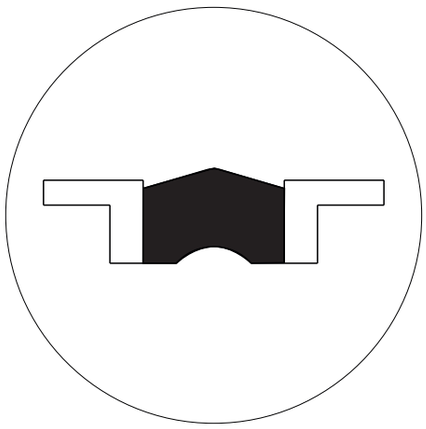

Special Features::

- Three part sealing set. Snap on assembly possible with single piece piston
- Sealing component from heavy duty anti-wear grade Nitrile rubber compact construction
- There is no need of tooling for assembly of the seals, including parts.

Material	:Nitrile rubber
Operating pressure	: up to 25 MPa (250 bar)
Velocity	: reciprocating to 0.5 m/s
Temperature	: -40 to +110 °C

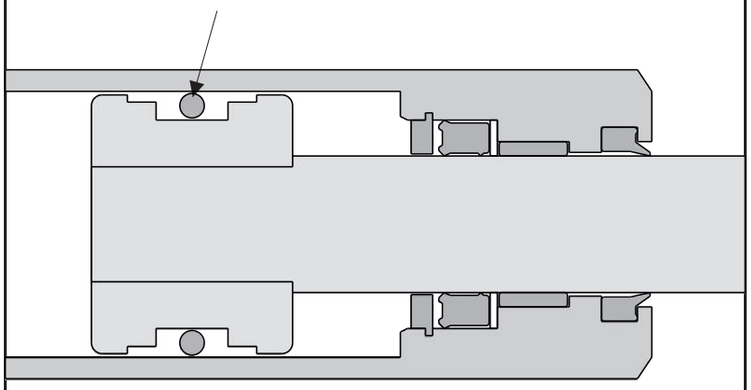

Piston Seal
MSS

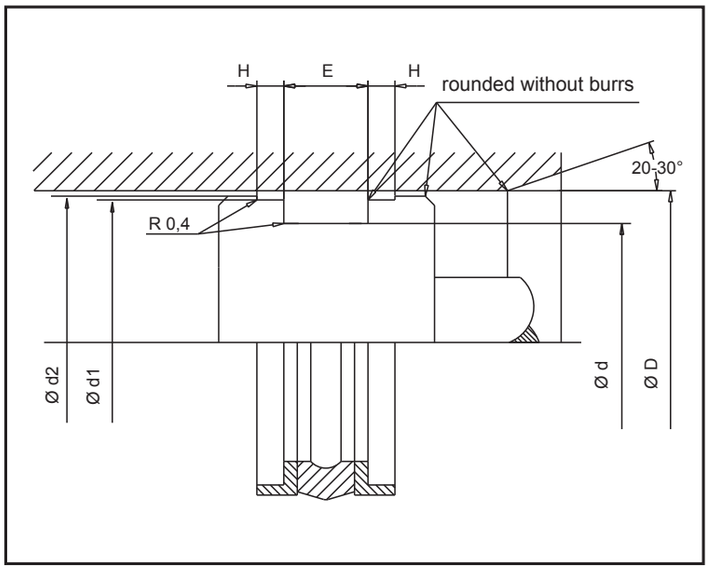

Limitations on Use

Operating pressure up to 25 MPa (250 bar)
Velocity : reciprocating up to 0.5 m/s
Ttemperature : -40 to +110 °C

Media for Use

Mineral oil based hydraulic oils, Bio Oils as well as flame resistant pressure liquids on request

Surface Finish

Surfaces	Rz	Ra
Housing bore D	1.6 µm	0,4 µm
Groove d	6,3 µm	1,6 µm
Groove flanks	10,0 µm	3,2 µm

D H9	d h9	E +0,2	H +0,1	d1 h9	d2 h11	Part N°.
25,00	17,50	8,50	3,25	21,30	24,00	MSS 25/17,5x8,5
40,00	30,00	11,00	4,00	35,50	39,00	MSS 40/30x11
50,00	40,00	11,00	4,00	47,00	49,00	MSS 50/40x11
63,00	53,00	11,00	4,00	58,50	61,50	MSS 63/53x11
80,00	70,00	11,00	4,00	75,50	78,50	MSS 80/70x11
100,00	87,00	14,00	6,00	93,80	98,50	MSS 100/87x14
125,00	112,00	14,00	6,00	118,80	123,50	MSS 100/112x14

Example for ordering Piston Seal:

MSS 25 / 17,5 x 8,5

Type
Bore diameter D
groove diameter d
Groove width

WARNING: Limits of application stated herein are standard values. They could be individually transgressed with due consideration to respective service conditions. In the event of a large duty cycle, pulsating operation and other complex operational conditions, simultaneous transgression of these values is not recommended. Due to a large variety of service conditions that may arise in course of actual use, the company does not take responsibility of or guarantee the functional accuracy of the individual components. Rights for changes are reserved.

Piston Seal
URGT

This double action series URGT is meant to separate + and - side in the hydraulic application. Polyurethan sealing element guarantees high functional reliability and life. The material choice is advantageous in anti wear and sealing function both static and the dynamic area.

Special Features::

- Two component construction consisting of PU dynamic seaingl ring and rectangular rubber ring
- Low friction due to oil groove on sealing geometry
- Improved dynamic and static sealing
- Large abrasion resistance, long life
- Low compression set, high elastic modulus
- Simple assembly in case of single part piston, no danger of damage during assembly
- Extensive range of dimensions even for assembly space as per ISO 7425-1.

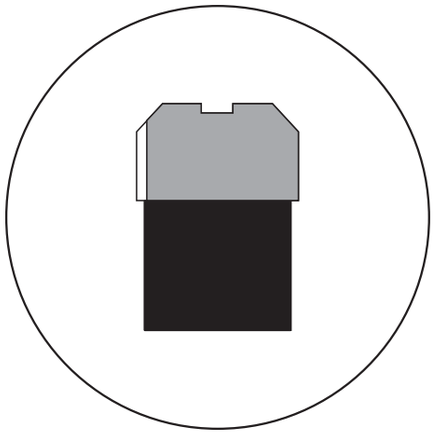

Material	: Polyurethan
Operating pressure	: up to 40 MPa (400 bar)
Velocity	: reciprocating to 0.8 m/s
Temperature	: -40 to +110 °C

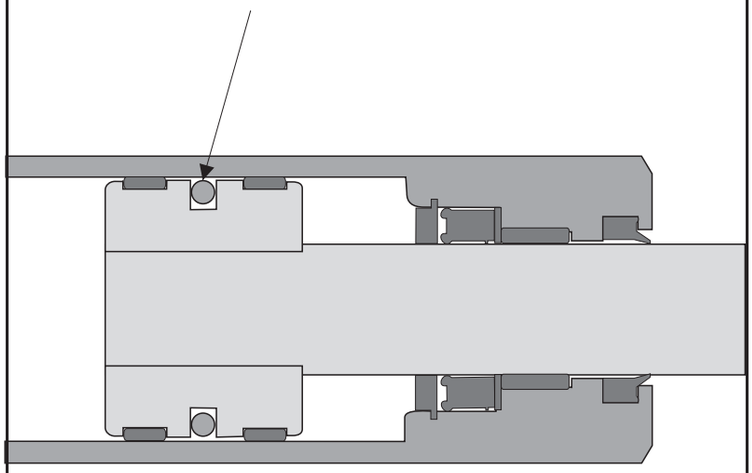

Piston Seal
URGT

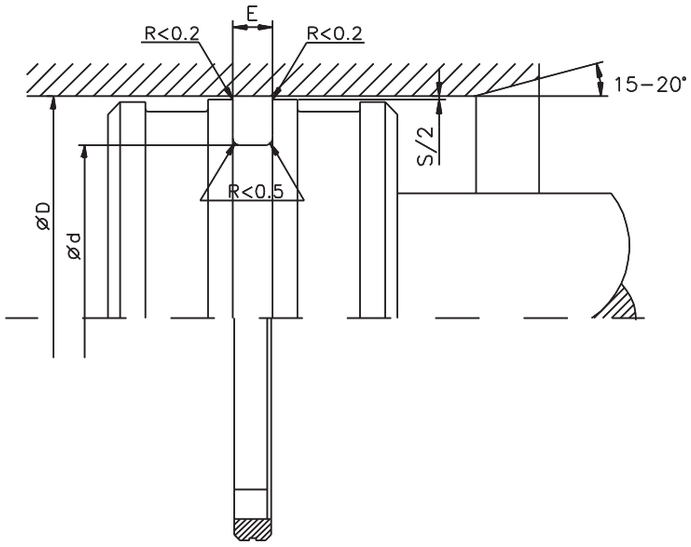

Limitations on Use

Operating pressure	: up to 40 MPa (400 bar)
Velocity	: reciprocating to 0.8 m/s
Temperature	: -40 to +110 °C

Media for Use

Mineral oil based pressure fluids, Bio Oils and flame resistant fluids on demand.

Surface Finish

Surfaces	Rmax	Rz	Ra
Housing bore D	2,5 µm	1,7 µm	0,3 µm
Groove d	5,0 µm	4,6 µm	0,8 µm
Groove flanks	10,0 µm	6,9 µm	1,6 µm

Diameter Clearance

Max. Clearance S [mm]	Max. Pressure MPa (bar)
0,70	16 (160)
0,50	25 (250)
0,40	40 (400)

D H9	d h9	E +0,2	Part N°.
40,00	**29,00**	**4,20**	**URGT 40/29x4,2-460N**
45,00	34,00	4,20	URGT 45/34x4,2-460N
45,00	32,00	6,30	URGT 45/32x6,3-460N
50,00	**34,50**	**6,30**	**URGT 50/34,5x6,3-460N**
50,00	**39,00**	**4,20**	**URGT 50/39x4,2-460N**
55,00	44,00	4,20	URGT 55/44x4,2-460N
60,00	44,50	6,30	URGT 60/44,5x6,3-460N
60,00	49,00	4,20	URGT 60/49x4,2-460N
63,00	**47,50**	**6,30**	**URGT 63/47,5x6,3-460N**
63,00	**52,00**	**4,20**	**URGT 63/52x4,2-460N**
65,00	54,00	4,20	URGT 65/54x4,2-460N
65,00	52,00	6,30	URGT 65/52x6,3-460N
70,00	59,00	4,20	URGT 70/59x4,2-460N
75,00	59,50	6,30	URGT 75/59,5x6,3-460N
75,00	62,00	6,30	URGT 75/62x6,3-460N
80,00	**64,50**	**6,30**	**URGT 80/64,5x6,3-460N**
80,00	66,50	6,30	URGT 80/66,5x6,3-460N
90,00	74,50	6,30	URGT 90/74,5x6,3-460N
100,00	**84,50**	**6,30**	**URGT 100/84,5x6,3-460N**
110,00	94,50	6,30	URGT 110/94,5x6,3-460N
120,00	104,50	6,30	URGT 120/104,5x6,3-460N
125,00	**109,50**	**6,30**	**URGT 125/109,5x6,3-460N**
130,00	109,00	8,10	URGT 130/109x8,1-460N
130,00	114,50	6,30	URGT 130/114,5x6,3-460N
140,00	119,00	8,10	URGT 140/119x8,1-460N
150,00	134,50	6,30	URGT 150/134,5x6,3-460N
160,00	**139,00**	**8,10**	**URGT 160/139x8,1-460N**
160,00	**144,50**	**6,30**	**URGT 160/144,5x6,3-460N**
180,00	164,50	6,30	URGT 180/164,5x6,3-460N
200,00	**179,00**	**8,10**	**URGT 200/179x8,1-460N**
220,00	199,00	8,10	URGT 220/199x8,1-460N
250,00	**229,00**	**8,10**	**URGT 250/229x8,1-460N**
280,00	259,00	8,10	URGT 280/259x8,1-460N
320,00	**299,00**	**8,10**	**URGT 320/299x8,1-460N**

Extensive range of inch measurement diagrams available on request.

Piston Seal
URGT

Example for ordering Piston Seal:

URGT 50 / 34,5x6,3 - 460N

Type
Bore diameter D
Groove diameter d
Groove width
Material cap/tetra seal

WARNING: Limits of application stated herein are standard values. They could be individually transgressed with due consideration to respective service conditions. In the event of a large duty cycle, pulsating operation and other complex operational conditions, simultaneous transgression of these values is not recommended. Due to a large variety of service conditions that may arise in course of actual use, the company does not take responsibility of or guarantee the functional accuracy of the individual components. Rights for changes are reserved.

Piston Seal
TTO

Series TTO is a double acting seal for intermediate stress hydraulic applications. Modified Polyurethan material and special profile ensure excellent sealing behaviour and very low frictional losses.

Special Features:

- Two component construction consisting of PU dynamic seal ring and O-ring as static sealing ring
- Very good shear characteristics
- Excellent dynamic and static sealing
- Long life, good abrasion resistance
- Very good anti extrusion behaviour
- Easy assembly in case of single piece pistons
- Pricewise variant as compared to PTFE material
- Extensive range of sizes, also for assembly/mounting space as per ISO 7425

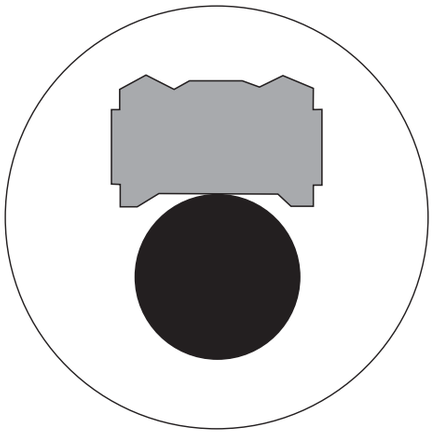

Material	: Polyurethan
Operating pressure	: up to 50 MPa (500 bar)
Velocity	: reciprocating to 0.5 m/s
Temperature	: -40 to +110 °C

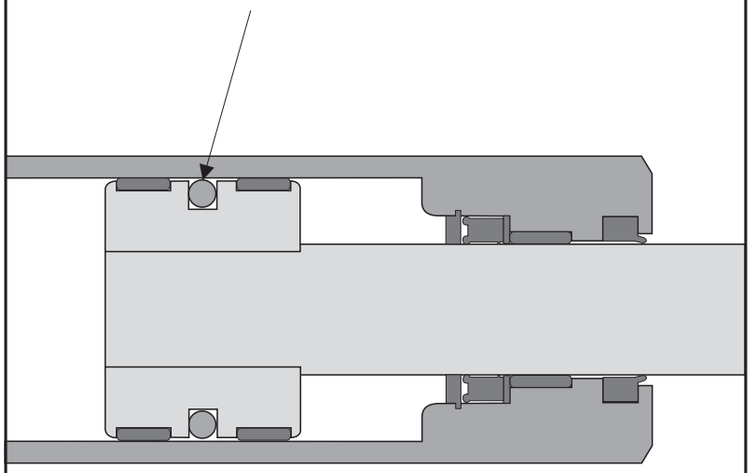

Piston Seal
TTO

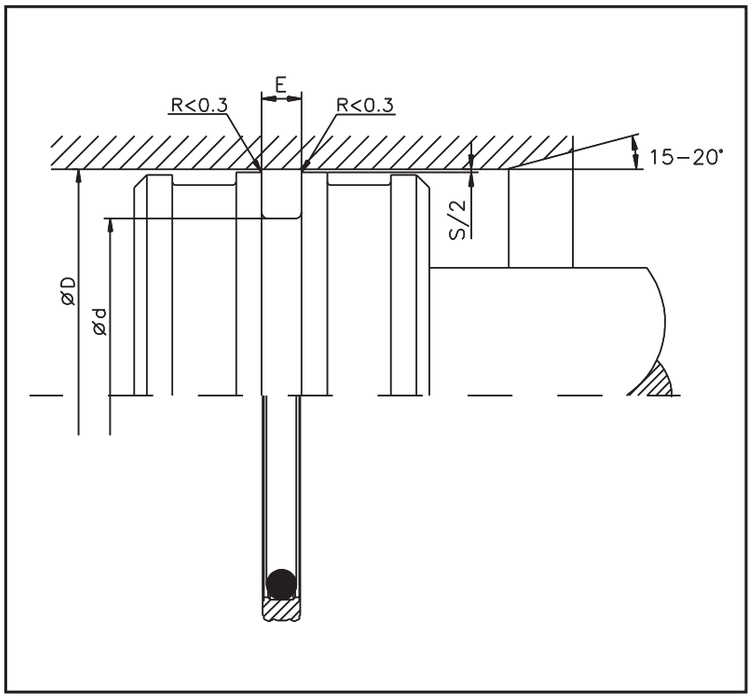

Limitations on Use

Operating pressure : up to 50 MPa (500 bar)
Velocity : reciprocating to 0.5 m/s
Temperature : -40 to +110 °C

Media for Use

Mineral oil based pressure fluids, Bio Oils and flame resistant pressure fluids on demand.

Surface Finish

Surfaces	Rmax	Rz	Ra
Housing bore D	2,5 µm	1,6 µm	0,4 µm
Groove d	5,0 µm	4,6 µm	0,8 µm
Groove flanks	10,0 µm	6,9 µm	1,6 µm

Diameter Clearance

Max. Clearance S/2 [mm]	Max. Pressure [bar]
0,80	100
0,40	200
0,17	400
0,10	500

D H9	d h9	E +0,2	O-Ring	Part N°.
16,00	**8,50**	**3,20**	**109**	**TTO 16/8,5x3,2-N**
20,00	**12,50**	**3,20**	**112**	**TTO 20/12,5x3,2-N**
25,00	**17,50**	**3,20**	**115**	**TTO 25/17,5x3,2-N**
25,00	**14,00**	**4,20**	**207**	**TTO 25/14x4,2-N**
30,00	22,50	3,20	118	TTO 30/22,5x3,2-N
32,00	**24,50**	**3,20**	**119**	**TTO 32/24,5x3,2-N**
32,00	**21,00**	**4,20**	**211**	**TTO 32/21x4,2-N**
35,00	27,50	3,20	121	TTO 35/27,5x3,2-N
40,00	32,50	3,20	124	TTO 40/32,5x3,2-N
40,00	**29,00**	**4,20**	**216**	**TTO 40/29x4,2-N**
40,00	24,50	6,30	318	TTO 40/24,5x6,3-N
45,00	34,00	4,20	219	TTO 45/34x4,2-N
45,00	29,50	6,30	320	TTO 45/29,5x6,3-N
50,00	**39,00**	**4,20**	**222**	**TTO 50/39x4,2-N**
50,00	**34,50**	**6,30**	**324**	**TTO 50/39x6,3-N**
52,00	36,50	6,30	324	TTO 52/36,5x6,3-N
55,00	44,00	4,20	224	TTO 55/44x4,2-N
55,00	39,50	6,30	325	TTO 55/39,5x6,3-N
60,00	49,00	4,20	225	TTO 60/49xx4,2-N
60,00	44,50	6,30	327	TTO 60/44,5x6,3-N
63,00	**52,00**	**4,20**	**226**	**TTO 63/52x4,2-N**
63,00	**47,50**	**6,30**	**328**	**TTO 63/47,5x6,3-N**
65,00	54,00	4,20	227	TTO 65/54x4,2-N
65,00	49,50	6,30	328	TTO 65/49,5x6,3-N
70,00	59,00	4,20	228	TTO 70/59x4,2-N
70,00	54,50	6,30	330	TTO 70/54,5x6,3-N
75,00	64,00	4,20	230	TTO 75/64x4,2-N
75,00	59,50	6,30	331	TTO 75/59,5x6,3-N
80,00	**69,00**	**4,20**	**842**	**TTO 80/69x4,2-N**
80,00	**64,50**	**6,30**	**333**	**TTO 80/64,5x6,3-N**
85,00	69,50	6,30	335	TTO 85/69,5x6,3-N

Piston Seal
TTO

D H9	d h9	E +0,2	O-Ring	Part N°.
110,00	94,50	6,30	343	TTO 110/94,5x6,3-N
120,00	104,50	6,30	346	TTO 120/104,5x6,3-N
125,00	**109,50**	**6,30**	**347**	**TTO 125/109,5x6,3-N**
130,00	114,50	6,30	349	TTO 130/114,5x6,3-N
140,00	119,00	8,10	426	TTO 140/119x8,1-N
150,00	129,00	8,10	430	TTO 150/129x8,1-N
160,00	139,00	8,10	433	TTO 160/139x8,1-N
170,00	149,00	8,10	436	TTO 170/149x8,1-N
180,00	159,00	8,10	438	TTO 180/159x8,1-N
200,00	179,00	8,10	441	TTO 200/179x8,1-N
250,00	229,00	8,10	447	TTO 250/229x8,1-N

Dimensions in bold correspond to ISO 7425-1 for mounting spaces..
Further dimensions available on demand.

Example for ordering Piston Seal:

TTO 63 / 52 x 4,2 - N

Type
Bore diameter D
Groove diameter d
Groove width
O-ring standard material

WARNING: Limits of application stated herein are standard values. They could be individually transgressed with due consideration to respective service conditions. In the event of a large duty cycle, pulsating operation and other complex operational conditions, simultaneous transgression of these values is not recommended. Due to a large variety of service conditions that may arise in course of actual use, the company does not take responsibility of or guarantee the functional accuracy of the individual components. Rights for changes are reserved.

Piston Seal
AF-511

The double acting seal series AF-511 can be used in most hydraulic applications. Different material and combinations assure operational security and long life over the entire pressure and velocity range with low friction, at various temperatures and pressure fluids.

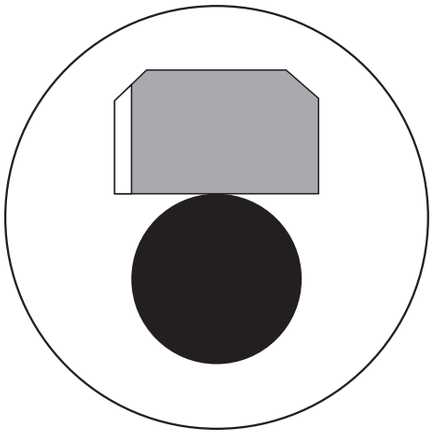

Special Features::

- Two part composition, consisting of a dynamic slide ring and a static seal as is an O-ring
- Outstanding shear characteristics, no stick slip effect
- Good dynamic and static sealing
- Good abrasion resistance, long life
- Wide temperature range of use and better chemical resistance depending on O-ring material
- Designed for assembly on single part piston
- Available for all cylinder diameters up to 2500 mm

Material	: PTFE-Compound
Operating pressure	: up to 40 MPa (400 bar)
Velocity	: reciprocating to 15 m/s
Temperature	: -40 to +200 °C

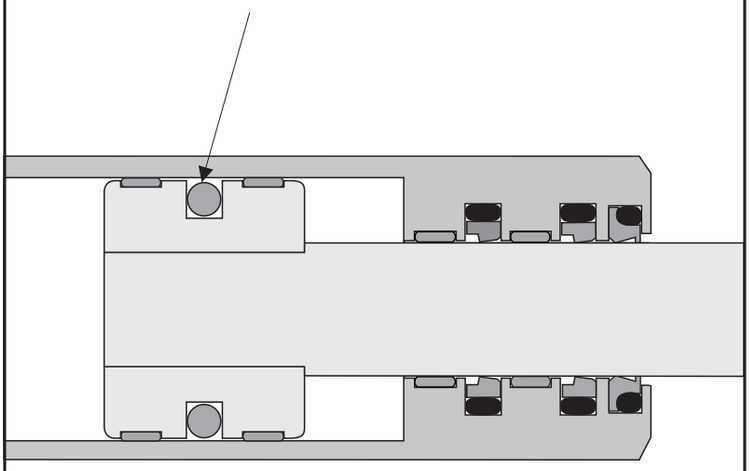

Piston Seal
AF-511

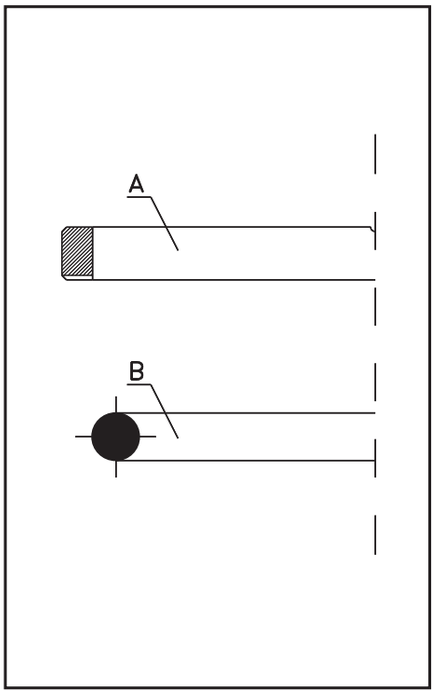

Dynamic Slide Ring (Part A)

Dynamic seal type with a cross-section as it is rectangular. The outer corners have been provided with a chamfer to simplify assembly and withstand extrusion in a better way. Notches present on both axial sides of the ring make it possible for the seal to be activated by internal hydraulic pressure and is most important while changing pressure from side to side.

The slide ring is manufactured from specially modified PTFE materials. Compound 5640 is the standard material of construction (MOC) that is used in hydraulics applications. This material is particularly superior in respect of very high abrasion resistance, inherent stability, very good shearing characteristics and very good thermal

O-ring (Part B)

O-rings are standard sealing elements with circular cross-section. Those used in the present application conform to the series of dimensions as per AS 568 A (American standard).

Standard MOC for hydraulics applications is NBR, which guarantees particularly good resistance to hydraulic fluids.

For use with Dynamic slide ring O-rings with a hardness of 70 Shore-A are preferred.

Materials Overview:

Materials Overview:
AF-1012: Virgin PTFE - outstanding chemical resistance - used in chemical, foodindustry and pharmaceutical industry with light mechanical stress.
AF-1022: PTFE with additive - Very good chemical resistance, outstanding shear characteristics, special purpose and intermediate stress applications.
AF-4115: PTFE with Glass fibre/lubricant - high abrasion resistance and inherent stability, good chemical resistance, used in various areas of industry and intermediatestress hydraulic applications.
AF-2426: PTFE with Carbon - good abrasion resistance and inherent stability, good chemical resistance, used in water and water-oil emulsions with intermediate stress. Also designed for dry runs.
AF-5640: PTFE with Bronze/additive - high abrasion resistance and inherent stability, very good shear characteristics, good chemical resistance, used in intermediate to high stress hydraulics application.
AF-1111: PTFE with Econol - very high abrasion resistance and inherent stability, used in hydraulics and abrasive pressure fluid applications.
AF-8172: PUR - very high abrasion resistance and inherent stability, used primarily in intermediate stress hydraulics applications.

Materials Overview: O-Rings

N: Acrylonitrile Butadiene Rubber - used in general machine construction, hydraulics, pneumatics. Resistant to mineral oil based pressure fluids, HFA, HFB and HFC fluids, and water.

F: Fluorine containing Rubbers - used at high temperatures and aggressive surrounding media, resistant to mineral based and synthetic pressure fluids, aliphatic, aromatic and chlorated hydrocarbons, phosphate-ester based poorly inflammable fluids.

E: Ethylene Propylene Diene Rubbers - used in armature and pump industry. Resistant to hot water, steam, phosphate-ester based poorly inflammable fluids but is not resistant to mineral oils!

S: Silicone Rubbers

C: Chloroprene Rubbers.

Piston seals series AF-511 has been successfully used for many years in hydraulic cylinders. The seal can be assembled in single or multiple piece pistons. For use in an undivided groove, profile ring must be carefully pried apart and subsequently calibrated in the cylinder bore.

Piston Seal
AF-511

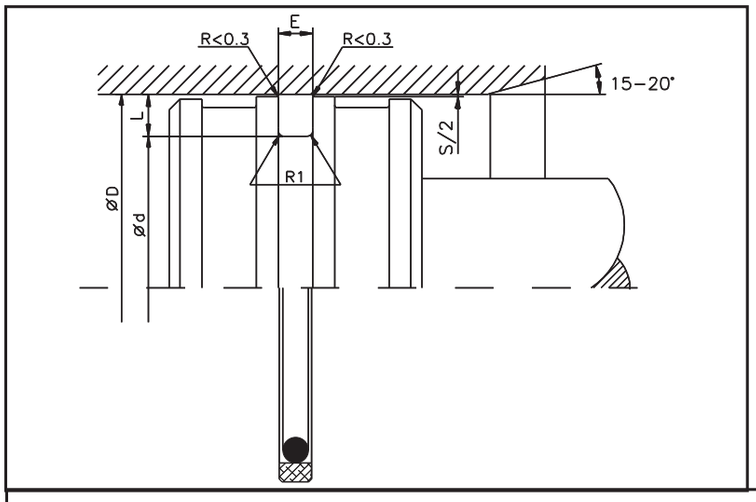

Limitations on Use

Operating pressure : up to 40 MPa (400 bar)
Velocity : reciprocating to 15 m/s
Temperature : -40 to +200 °C
(depending on O-Ring material)

Media for Use

Mineral oil based pressure fluids, flame resistant fluids (HFA, HFB, HFC), pressure fluids/Bio-Oils, water air and other media (depending on O-ring material).

Surface Finish

Surfaces	Rmax	Rz	Ra
Housing bore D	2,5 µm	1,6 µm	0,4 µm
Groove d	10,0 µm	6,3 µm	1,6 µm
Groove flanks	16,0 µm	10,0 µm	3,2 µm

Recommended Assembly Measurements

Section	O-Ring Lace ø mm	Recommended Diameter Standard D mm	Groove Width E mm	Groove Depth L mm	Max. Diameter Clearance S 0 - 200 bar mm	Max. Diameter Clearance S 200 - 400 bar mm	Radius R1 max. mm
A	1,78	8 - 14,9	2,2	2,45	0,6 - 0,3	0,4 - 0,2	0,3
B	2,62	15 - 39,9	3,2	3,75	0,8 - 0,4	0,4 - 0,3	0,5
C	3,53	40 - 79,9	4,2	5,50	1,2 - 0,8	0,8 - 0,4	0,7
D	5,33	80 - 132,9	6,3	7,75	1,4 - 1,0	1,0 - 0,4	1,2
E	7,00	133 - 329,9	8,1	10,50	1,8 - 1,2	1,2 - 0,5	1,5
F	7,00	330 - 669,9	8,1	12,25	2,0 - 1,2	1,2 - 0,5	1,5
G	8,40	670 -	9,5	14,00	2,3 - 1,4	1,3 - 0,6	2,0

D H9	d h10	E +0,2	O-Ring	Part N°.
8,00	3,10	2,20	006	AF-511-0080-A-5640N
10,00	5,10	2,20	009	AF-511-0100-A-5640N
12,00	7,10	2,20	011	AF-511-0120-A-5640N
14,00	9,10	2,20	012	AF-511-0140-A-5640N
15,00	7,50	3,20	109	AF-511-0150-B-5640N
16,00	**11,10**	**2,20**	**013**	**AF-511-0160-A-5640N**
16,00	**8,50**	**3,20**	**109**	**AF-511-0160-B-5640N**
18,00	10,50	3,20	110	AF-511-0180-B-5640N
20,00	**15,10**	**2,20**	**015**	**AF-511-0200-A-5640N**
20,00	**12,50**	**3,20**	**112**	**AF-511-0200-B-5640N**
22,00	14,50	3,20	113	AF-511-0220-B-5640N
24,00	16,50	3,20	114	AF-511-0240-B-5640N
25,00	**17,50**	**3,20**	**115**	**AF-511-0250-B-5640N**
25,00	**14,00**	**4,20**	**207**	**AF-511-0250-C-5640N**
28,00	20,50	3,20	117	AF-511-0280-B-5640N
30,00	22,50	3,20	118	AF-511-0300-B-5640N
32,00	**24,50**	**3,20**	**119**	**AF-511-0320-B-5640N**
32,00	**21,00**	**4,20**	**211**	**AF-511-0320-C-5640N**
35,00	27,50	3,20	121	AF-511-0350-B-5640N
38,00	30,50	3,20	123	AF-511-0380-B-5640N
39,00	31,50	3,20	124	AF-511-0390-B-5640N
40,00	**32,50**	**3,20**	**124**	**AF-511-0400-B-5640N**
40,00	**29,00**	**4,20**	**216**	**AF-511-0400-C-5640N**
42,00	31,00	4,20	217	AF-511-0420-C-5640N
45,00	34,00	4,20	219	AF-511-0450-C-5640N
48,00	37,00	4,20	221	AF-511-0480-C-5640N
50,00	**39,00**	**4,20**	**222**	**AF-511-0500-C-5640N**
50,00	**34,50**	**6,30**	**324**	**AF-511-0500-D-5640N**

D H9	d h10	E +0,2	O-Ring	Part N°.
52,00	41,00	4,20	223	AF-511-0520-C-5640N
55,00	44,00	4,20	224	AF-511-0550-C-5640N
60,00	49,00	4,20	225	AF-511-0600-C-5640N
63,00	**52,00**	**4,20**	**226**	**AF-511-0630-C-5640N**
63,00	**47,50**	**6,30**	**328**	**AF-511-0630-D-5640N**
64,00	53,00	4,20	226	AF-511-0640-C-5640N
65,00	54,00	4,20	227	AF-511-0650-C-5640N
70,00	59,00	4,20	228	AF-511-0700-C-5640N
70,00	54,50	6,30	330	AF-511-0700-D-5640N
75,00	64,00	4,20	230	AF-511-0750-C-5640N
80,00	**69,00**	**4,20**	**231**	**AF-511-0800-C-5640N**
80,00	**64,50**	**6,30**	**333**	**AF-511-0800-D-5640N**
80,00	**59,00**	**8,10**	**58x7**	**AF-511-0800-E-5640N**
85,00	69,50	6,30	335	AF-511-0850-D-5640N
85,00	64,00	8,10	64x7	AF-511-0850-E-5640N
89,00	73,50	6,30	336	AF-511-0890-D-5640N
90,00	74,50	6,30	336	AF-511-0900-D-5640N
90,00	69,00	8,10	68x7	AF-511-0900-E-5640N
95,00	79,50	6,30	338	AF-511-0950-D-5640N
95,00	74,00	8,10	73x7	AF-511-0950-E-5640N
100,00	**84,50**	**6,30**	**339**	**AF-511-1000-D-5640N**
100,00	**79,00**	**8,10**	**79x7**	**AF-511-1000-E-5640N**
105,00	89,50	6,30	341	AF-511-1050-D-5640N
105,00	84,00	8,10	83x7	AF-511-1050-E-5640N
110,00	94,50	6,30	343	AF-511-1100-D-5640N
110,00	89,00	8,10	89x7	AF-511-1100-E-5640N
115,00	99,50	6,30	344	AF-511-1150-D-5640N
115,00	94,00	8,10	94x7	AF-511-1150-E-5640N

Piston Seal
AF-511

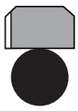

D H9	d h10	E +0,2	O-Ring	Part N°.
120,00	104,50	6,30	346	AF-511-1200-D-5640N
120,00	99,00	8,10	99x7	AF-511-1200-E-5640N
125,00	**109,50**	**6,30**	**347**	**AF-511-1250-D-5640N**
125,00	**104,00**	**8,10**	**101x7**	**AF-511-1250-E-5640N**
127,00	111,50	6,30	348	AF-511-1270-D-5640N
130,00	114,50	6,30	349	AF-511-1300-D-5640N
130,00	109,00	8,10	106x7	AF-511-1300-E-5640N
132,00	116,50	6,30	350	AF-511-1320-D-5640N
133,00	112,00	8,10	425	AF-511-1330-E-5640N
135,00	114,00	8,10	425	AF-511-1350-E-5640N
140,00	119,00	8,10	426	AF-511-1400-E-5640N
145,00	124,00	8,10	428	AF-511-1450-E-5640N
150,00	129,00	8,10	430	AF-511-1500-E-5640N
154,00	133,00	8,10	431	AF-511-1540-E-5640N
155,00	134,00	8,10	431	AF-511-1550-E-5640N
160,00	**144,50**	**6,30**	**358**	**AF-511-1600-D-5640N**
160,00	**139,00**	**8,10**	**433**	**AF-511-1600-E-5640N**
165,00	144,00	8,10	434	AF-511-1650-E-5640N
170,00	149,00	8,10	436	AF-511-1700-E-5640N
175,00	154,00	8,10	437	AF-511-1750-E-5640N
180,00	159,00	8,10	438	AF-511-1800-E-5640N
190,00	169,00	8,10	439	AF-511-1900-E-5640N
200,00	**184,50**	**6,30**	**366**	**AF-511-2000-E-5640N**
200,00	**179,00**	**8,10**	**441**	**AF-511-2000-E-5640N**
210,00	189,00	8,10	443	AF-511-2100-E-5640N
220,00	199,00	8,10	444	AF-511-2200-E5640N
230,00	209,00	8,10	445	AF-511-2300-E-5640N
240,00	219,00	8,10	446	AF-511-2400-E-5640N
250,00	**229,00**	**8,10**	**447**	**AF-511-2500-E-5640N**
250,00	**225,50**	**8,10**	**446**	**AF-511-2500-F-5640N**
260,00	239,00	8,10	447	AF-511-2600-E-5640N
270,00	249,00	8,10	448	AF-511-2700-E-5640N
280,00	259,00	8,10	449	AF-511-2800-E-5640N
290,00	269,00	8,10	450	AF-511-2900-E-5640N
300,00	279,00	8,10	451	AF-511-3000-E-5640N
310,00	289,00	8,10	451	AF-511-3100-E-5640N

D H9	d h10	E +0,2	O-Ring	Part N°.
320,00	**299,00**	**8,10**	**452**	**AF-511-3200-E-5640N**
320,00	**295,50**	**8,10**	**452**	**AF-511-3200-F-5640N**
330,00	305,50	8,10	453	AF-511-3300-F-5640N
340,00	315,50	8,10	453	AF-511-3400-F-5640N
350,00	325,50	8,10	454	AF-511-3500-F-5640N
360,00	335,50	8,10	455	AF-511-3600-F-5640N
370,00	345,50	8,10	456	AF-511-3700-F-5640N
380,00	355,50	8,10	457	AF-511-3800-F-5640N
390,00	365,50	8,10	457	AF-511-3900-F-5640N
400,00	**375,50**	**8,10**	**458**	**AF-511-4000-F-5640N**
410,00	385,50	8,10	459	AF-511-4100-F-5640N
420,00	395,50	8,10	460	AF-511-4200-F-5640N
430,00	405,50	8,10	461	AF-511-4300-F-5640N
440,00	415,50	8,10	461	AF-511-4400-F-5640N
450,00	425,50	8,10	462	AF-511-4500-F-5640N
460,00	435,50	8,10	463	AF-511-4600-F-5640N
470,00	445,50	8,10	464	AF-511-4700-F-5640N
480,00	455,50	8,10	464	AF-511-4800-F-5640N
490,00	465,50	8,10	ASA 93	AF-511-4900-F-5640N
500,00	**475,50**	**8,10**	**466**	**AF-511-5000-F-5640N**
510,00	485,50	8,10	467	AF-511-5100-F-5640N
520,00	495,50	8,10	468	AF-511-5200-F-5640N
530,00	505,50	8,10	468	AF-511-5300-F-5640N
540,00	515,50	8,10	469	AF-511-5400-F-5640N
550,00	525,50	8,10	469	AF-511-5500-F-5640N
560,00	535,50	8,10	470	AF-511-5600-F-5640N
570,00	545,50	8,10	ASA 100	AF-511-5700-F-5640N
580,00	555,50	8,10	ASA 100	AF-511-5800-F-5640N
590,00	565,50	8,10	471	AF-511-5900-F-5640N
600,00	575,50	8,10	471	AF-511-6000-F-5640N
610,00	585,50	8,10	472	AF-511-6100-F-5640N
620,00	595,50	8,10	472	AF-511-6200-F-5640N
630,00	605,50	8,10	ASA 104	AF-511-6300-F-5640N
640,00	615,50	8,10	473	AF-511-6400-F-5640N
650,00	625,50	8,10	473	AF-511-6500-F-5640N
660,00	635,50	8,10	474	AF-511-6600-F-5640N

Further dimensions and intermediate sizes available up to diameter 2500 mm on request.
Dimensions in bold comply with DIN ISO 7425 for mounting spaces.

Example for ordering Piston Seal:

AF-511 0320 - B - 5640N

- Type
- Nominal diameter x 10
- Cross-section
- Cap material
- O-ring material

Material Key:

Dynamic slide ring
- AF-1012 - Virgin PTFE
- AF-1022 - PTFE with additive
- AF-1024 - PTFE with additive (FDA)
- AF-4115 - PTFE with glass fibre
- AF-2426 - PFTE with carbon
- AF-5640 - PTFE with bronze/additive
- AF-1111 - PTFE with Econol
- AF-8172 - PUR
- AF-7710 - UHMW-PE (PEHD) (FDA)

O-Ring
- N - NBR
- F - FPM
- E - EPDM
- S - Silicon
- C - Chloropren

WARNING: Limits of application stated herein are standard values. They could be individually transgressed with due consideration to respective service conditions. In the event of a large duty cycle, pulsating operation and other complex operational conditions, simultaneous transgression of these values is not recommended. Due to a large variety of service conditions that may arise in course of actual use, the company does not take responsibility of or guarantee the functional accuracy of the individual components. Rights for changes are reserved.

Piston Seal
AF-518

AF-518

Series	Nom. dia	Groove cross-section	Groove width	O-ring Cross-sect
A	8,0 - 16,9	2,45	2,2	1,78
B	15,0 - 39,9	3,75	3,2	2,62
C	40,0 - 79,9	5,50	4,2	3,53
D	80,0 - 132,9	7,75	6,3	5,33
E	133,0 - 329,9	10,5	8,1	6,99
F	330,0 - 669,9	12,25	8,1	6,99
G	670,0 - 999,9	14,00	9,5	8,40

This seal is also possible to get as a rod seal type **AF-418.**

Re tolerances and clearances please see information on type AF-511 page 61.

Example for ordering Piston Seal:

AF-518 - 0320 - B - 5640N

- Type
- Nominal diameter x 10
- Cross-section
- Cap material
- O-ring material

Material Key:

Dynamic slide ring
- AF-1012 - Virgin PTFE
- AF-1022 - PTFE with additive
- AF-1024 - PTFE with additive (FDA)
- AF-4115 - PTFE with glass fibre
- AF-2426 - PFTE with carbon
- AF-5640 - PTFE with bronze/additive
- AF-1111 - PTFE with Econol
- AF-8172 - PUR
- AF-7710 - UHMW-PE (PEHD) (FDA)

O-Ring
- N - NBR
- F - FPM
- E - EPDM
- S - Silicon
- C - Chloropren

Piston seal

AF-551, AF-553

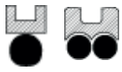

AF-551

Series	Rod seal Nom. dia.	Groove width	Groove depth	O-ring	X-ring
1	16,0-39,9	4,2	5,5	3,53	1,78
2	40,0-79,9	6,3	7,75	5,33	1,78
3	80,0-132,9	8,1	10,25	6,99	2,62
4	133,0-252,9	8,1	12,25	6,99	2,62
5	253,0-462,9	9,5	14,0	8,4	3,53
6	463,0-700,0	11,5	17,5	10,0	5,33

AF-553

Serie	Rod seal Nom. dia.	Groove width	Groove depth	O-ring	X-ring
1	40,0-79,9	6,3	5,0	2x 2,62	1,78
2	80,0-132,9	8,3	6,5	2x3,53	2,62
3	133,0-462,9	12,3	9,0	2x5,33	3,53
4	463,0-700,0	16,3	15,5	2x6,99	5,33

Both above seals are possible to get as rod seals type **AF-451** and **AF-453**

Re tolerances and clearances please see information on type AF-511 page 44.

Single Acting Piston Seal
AF-541

Single acting piston seals of the AF-541 series are preferentially used in hydraulic cylinders with unilateral pressure application. Various material combinations ensure high functional reliability and long life over the entire range of pressures and velocities with minimal friction, with various temperatures and pressure fluids.

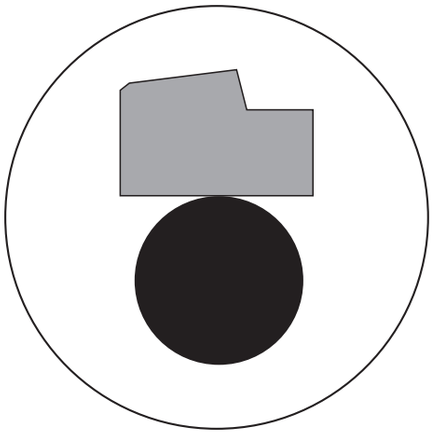

Special Features:

- Two part composition, consisting of a dynamic seal ring and a static seal as is an O-ring
- Outstanding shear characteristics, no stick-slip effect
- Good dynamic and static sealing
- Great abrasion resistance, long life
- Wide temperature range for application and high chemical resistance depending on O-ring material
- Designed for assembly on single acting piston or in combination with other seals
- Available for all cylinder diameters up to 2500 mm.

Material	: PTFE-Compound
Operating pressure	: up to 40 MPa (400 bar)
Velocity	: reciprocating to 15 m/s
Temperature	: -40 to +200 °C

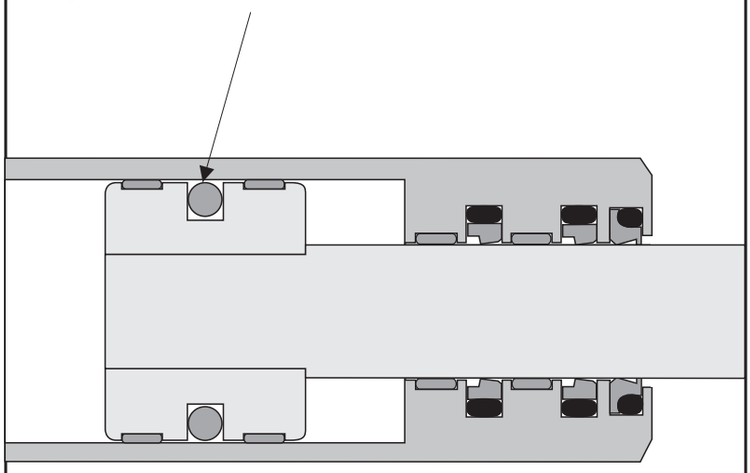

Single Acting Piston Seal
AF-541

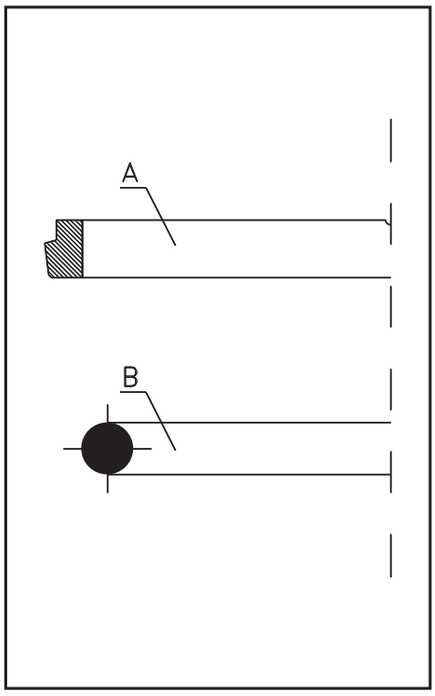

Dynamic slide ring (Part A)

Slide ring section is rectangular and is provided with a stepped sealing edge on the pressure side. On the opposite side, the profile travels under a flat wedge/angle. This special form of sealing profile helps to achieve a recovery effect. This means that the persistant oil film present on the cylinder wall during motion is conveyed back to the surge chamber.

Profile gaskets are manufactured from specially modified PTFE materials. Compound 5640 is the standard material of construction (MOC) that is used in hydraulics applications. This material is particularity superior in respect of very high abrasion resistance, inherent stability, very good shearing characteristics and very good thermal and chemical resistance.

O-Ring (Part B)

O-rings are standard sealing elements with circular cross section. Those used in the present application conform to the series of dimensions as per AS 568 A (American norms). Standard MOC for hydraulics applications is NBR, which guarantees particularly good resistance to hydraulic fluids.

For use with profile gaskets O-rings with hardness of 70 Shore-A are preferred.

Materials Overview:

AF-1012: Virgin PTFE - outstanding chemical resistance - used in chemical, foodindustry and pharmaceutical industry with light mechanical stress.
AF-1022: PTFE with additive - Very good chemical resistance, outstanding shear characteristics, special purpose and intermediate stress applications.
AF-4115: PTFE with Glass fibre/lubricant - high abrasion resistance and inherent stability, good chemical resistance, used in various areas of industry and intermediatestress hydraulic applications.
AF-2426: PTFE with Carbon - good abrasion resistance and inherent stability, good chemical resistance, used in water and water-oil emulsions with intermediate stress. Also designed for dry runs.
AF-5640: PTFE with Bronze/additive - high abrasion resistance and inherent stability, very good shear characteristics, good chemical resistance, used in intermediate to high stress hydraulics application.
AF-1111: PTFE with Econol - very high abrasion resistance and inherent stability, used in hydraulics and abrasive pressure fluid applications.
AF-8172: PUR - very high abrasion resistance and inherent stability, used primarily in intermediate stress hydraulics applications.

Materials Overview: O-Rings

N: Acrylonitrile-Butadiene-Rubber - Used in general machine construction, hydraulics, pneumatics. Resistant to mineral oil based pressure fluids, HFA, HFB and HFC fluids, and water.

F: Fluorine containing Rubbers - Used at high temperatures and aggressive surrounding media, resistant to mineral based and synthetic pressure fluids, aliphatic, aromatic and chlorated hydrocarbons, phosphate-ester based poorlz inflammable fluids.

E: Ethylene Propylene Diene Rubbers - Used in armature and pump industry. Resistant to hot water, steam, phosphate-ester based poorly inflammable fluids but is not resistant to mineral oils!

S: Silicone-Rubbers

C: Chloroprene Rubbers

Piston seals series AF-541 has been successfully used in hydraulic cylinders for many years. It can only be used in cases of unilateral pressure applications on pistons if used as a single seal.
The seal can be assembled in split and unsplit/single and multiple piece pistons. For use in an undivided groove, profile ring must be carefully pried apart and subsequently calibrated in the cylinder bore.

Single Acting Piston Seal
AF-541

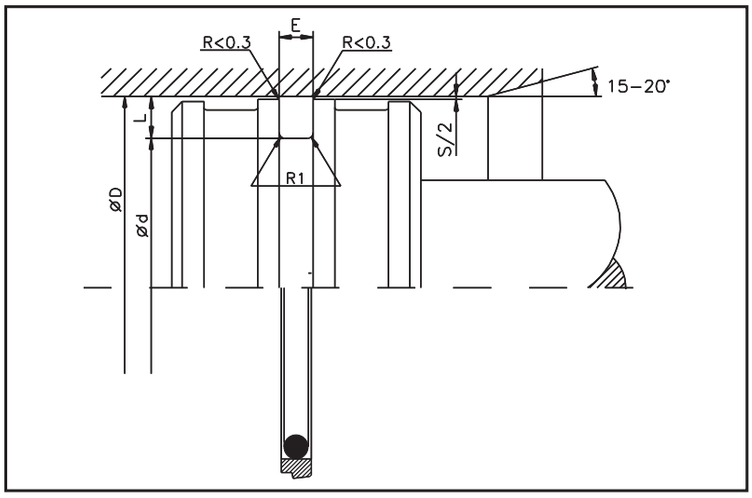

Limitations on Use

Operating pressure : up to 40 MPa (400 bar)
Velocity : reciprocating to15 m/s
Temperature : -40 to +200 °C
(depending on O-ring material)

Media for Use

Mineral oil based pressure fluids, flame resistant fluids (HFA, HFB, HFC), non-polluting pressure fluids (Bio-Oils),water,air and other media (depending on O-ring material).

Surface Finish

Surfaces	Rmax	Rz	Ra
Housing bore D	2,5 µm	1,6 µm	0,4 µm
Groove d	10,0 µm	6,3 µm	1,6 µm
Groove flanks	16,0 µm	10,0 µm	3,2 µm

Recommended Assembly Dimensions

Section	O-Ring mm	Recommended Diameter Standard D mm	Groove Width E mm	Groove Depth L mm	Max. Diameter Clearance S 0 - 200 bar mm	Max. Diameter Clearance S 200 - 400 bar mm	Radius R1 max. mm
A	1,78	8 - 16,9	2,2	2,45	0,6 - 0,3	0,4 - 0,2	0,3
B	2,62	17 - 26,9	3,2	3,65	0,8 - 0,4	0,4 - 0,3	0,5
C	3,53	27 - 59,9	4,2	5,35	1,2 - 0,8	0,8 - 0,4	0,7
D	5,33	60 - 199,9	6,3	7,55	1,4 - 1,0	1,0 - 0,4	1,2
E	7,00	200 - 255,9	8,1	10,25	1,8 - 1,2	1,2 - 0,5	1,5
F	7,00	256 - 669,9	8,1	12,00	2,0 - 1,2	1,2 - 0,5	1,5
G	8,40	670 -	9,5	14,00	2,2 - 1,4	1,3 - 0,6	2,0

D H9	d h10	E +0,2	O-Ring	Part N°.
8,00	3,10	2,20	006	AF-541-0080-A-5640N
10,00	5,10	2,20	009	AF-541-0100-A-5640N
12,00	7,10	2,20	011	AF-541-0120-A-5640N
15,00	10,10	2,20	012	AF-541-0150-A-5640N
16,00	11,10	2,20	013	AF-541-0160-A-5640N
18,00	10,70	3,20	111	AF-541-0180-B-5640N
20,00	12,70	3,20	112	AF-541-0200-B-5640N
20,00	15,10	2,20	015	AF-541-0200-A-5640N
22,00	14,70	3,20	113	AF-541-0220-B-5640N
25,00	14,30	4,20	207	AF-541-0250-C-5640N
25,00	17,70	3,20	115	AF-541-0250-B-5640N
25,40	18,10	3,20	115	AF-541-0254-B-5640N
28,00	17,30	4,20	209	AF-541-0280-C-5640N
28,50	17,80	4,20	209	AF-541-0285-C-5640N
30,00	19,30	4,20	210	AF-541-0300-C-5640N
31,70	21,00	4,20	211	AF-541-0317-C-5640N
32,00	21,30	4,20	211	AF-541-0320-C-5640N
32,00	24,70	3,20	119	AF-541-0320-B-5640N
35,00	24,30	4,20	213	AF-541-0350-C-5640N
38,00	27,30	4,20	215	AF-541-0380-C-5640N
39,00	28,30	4,20	215	AF-541-0390-C-5640N
40,00	29,30	4,20	216	AF-541-0400-C-5640N
40,00	32,70	3,20	124	AF-541-0400-B-5640N
42,00	31,30	4,20	217	AF-541-0420-C-5640N
44,50	33,80	4,20	219	AF-541-0445-C-5640N
45,00	34,30	4,20	219	AF-541-0450-C-5640N
48,00	37,30	4,20	221	AF-541-0480-C-5640N
50,00	34,90	6,30	324	AF-541-0500-D-5640N

D H9	d h10	E +0,2	O-Ring	Part N°.
50,00	39,30	4,20	222	AF-541-0500-C-5460N
50,80	40,10	4,20	222	AF-541-0508-C-5640N
52,00	41,30	4,20	223	AF-541-0520-C-5640N
55,00	44,30	4,20	224	AF-541-0550-C-5640N
57,10	46,40	4,20	224	AF-541-0571-C-5640N
60,00	44,90	6,30	327	AF-541-0600-D-5640N
63,00	47,90	6,30	328	AF-541-0630-D-5640N
63,00	52,30	4,20	226	AF-541-0630-C-4640N
63,50	48,40	6,30	328	AF-541-0635-D-5640N
64,00	48,90	6,30	328	AF-541-0640-D-5640N
65,00	49,90	6,30	328	AF-541-0650-D-5640N
69,80	54,70	6,30	330	AF-541-0698-D-5640N
70,00	54,90	6,30	330	AF-541-0700-D-5640N
75,00	59,90	6,30	332	AF-541-0750-D-5640N
76,20	61,10	6,30	332	AF-541-0762-D-5640N
80,00	59,50	8,10	58x7	AF-541-0800-E-5640N
80,00	64,90	6,30	333	AF-541-0800-D-5640N
82,50	67,40	6,30	334	AF-541-0825-D-5640N
85,00	69,90	6,30	335	AF-541-0850-D-5640N
89,00	73,90	6,30	336	AF-541-0890-D-5640N
90,00	74,90	6,30	336	AF-541-0900-D-5640N
95,00	79,90	6,30	337	AF-541-0950-D-5640N
100,00	79,50	8,10	79x7	AF-541-1000-E-5640N
100,00	84,90	6,30	340	AF-541-1000-D-5640N
101,60	86,50	6,30	340	AF-541-1016-D-5640N
105,00	89,90	6,30	341	AF-541-1050-D-5640N
110,00	94,90	6,30	343	AF-541-1100-D-5640N
114,30	99,20	6,30	344	AF-541-1143-D-5640N

Single Acting Piston Seal
AF-541

D H9	d h10	E + 0,2	O-Ring	Part N°.
115,00	99,90	6,30	344	AF-541-1150-D-5640N
120,00	104,90	6,30	346	AF-541-1200-D-5640N
125,00	104,50	8,10	101x7	AF-541-1250-E-5640N
125,00	109,90	6,30	347	AF-541-1250-D-5640N
127,00	111,90	6,30	348	AF-541-1270-D-5640N
130,00	114,90	6,30	349	AF-541-1300-D-5640N
132,00	116,90	6,30	349	AF-541-1320-D-5640N
133,00	117,90	6,30	350	AF-541-1330-D-5640N
135,00	119,90	6,30	351	AF-541-1350-D-5640N
140,00	124,90	6,30	352	AF-541-1400-D-5640N
145,00	129,90	6,30	353	AF-541-1450-D-5640N
150,00	134,90	6,30	355	AF-541-1500-D-5640N
154,00	138,90	6,30	356	AF-541-1540-D-5640N
155,00	139,90	6,30	356	AF-541-1550-D-5640N
160,00	139,50	8,10	443	AF-541-1600-E-5640N
160,00	144,90	6,30	358	AF-541-1600-D-5640N
165,00	149,90	6,30	360	AF-541-1650-D-5640N
170,00	154,90	6,30	361	AF-541-1700-D-5640N
175,00	159,90	6,30	362	AF-541-1750-D-5640N
180,00	164,90	6,30	363	AF-541-1800-D-5640N
190,00	174,90	6,30	364	AF-541-1900-D-5640N
200,00	179,50	8,10	441	AF-541-2000-E-5640N
200,00	184,90	6,30	366	AF-541-2000-D-5640N
210,00	189,50	8,10	443	AF-541-2100-E-5640N
220,00	199,50	8,10	444	AF-541-2200-E-5640N
230,00	209,50	8,10	445	AF-541-2300-E-5640N
240,00	219,50	8,10	446	AF-541-2400-E-5640N
250,00	226,00	8,10	446A	AF-541-2500-E-5640N
250,00	229,50	8,10	447	AF-541-2500-E-5640N
260,00	236,00	8,10	447	AF-541-2600-F-5640N
270,00	246,00	8,10	448	AF-541-2700-F-5640N
280,00	256,00	8,10	449	AF-541-2800-F-5640N
290,00	266,00	8,10	449	AF-541-2900-F-5640N
300,00	276,00	8,10	451	AF-541-3000-F-5640N
310,00	286,00	8,10	451	AF-541-3100-F-5640N
320,00	296,00	8,10	452	AF-541-3200-F-5640N

D H9	d h10	E + 0,2	O-Ring	Part N°.
320,00	299,50	8,10	452	AF-541-3200-E-5640N
330,00	306,00	8,10	453	AF-541-3300-F-5640N
340,00	316,00	8,10	453	AF-541-3400-F-5640N
350,00	326,00	8,10	454	AF-541-3500-F-5640N
360,00	336,00	8,10	455	AF-541-3600-F-5640N
370,00	346,00	8,10	456	AF-541-3700-F-5640N
380,00	356,00	8,10	457	AF-541-3800-F-5640N
390,00	366,00	8,10	457	AF-541-3900-F-5640N
400,00	376,00	8,10	458	AF-541-4000-F-5640N
410,00	386,00	8,10	459	AF-541-4100-F-5640N
420,00	396,00	8,10	460	AF-541-4200-F-5640N
430,00	406,00	8,10	461	AF-541-4300-F-5640N
440,00	416,00	8,10	461	AF-541-4400-F-5640N
450,00	426,00	8,10	462	AF-541-4500-F-5640N
460,00	436,00	8,10	463	AF-541-4600-F-5640N
470,00	446,00	8,10	464	AF-541-4700-F-5640N
480,00	456,00	8,10	464	AF-541-4800-F-5640N
490,00	466,00	8,10	ASA 93	AF-541-4900-F-5640N
500,00	476,00	8,10	466	AF-541-5000-F-5640N
510,00	486,00	8,10	467	AF-541-5100-F-5640N
520,00	496,00	8,10	468	AF-541-5200-F-5640N
530,00	506,00	8,10	468	AF-541-5300-F-5640N
540,00	516,00	8,10	469	AF-541-5400-F-5640N
550,00	526,00	8,10	469	AF-541-5500-F-5640N
560,00	536,00	8,10	470	AF-541-5600-F-5640N
570,00	546,00	8,10	ASA 100	AF-541-5700-F-5640N
580,00	556,00	8,10	ASA 100	AF-541-5800-F-5640N
590,00	566,00	8,10	471	AF-541-5900-F-5640N
600,00	576,00	8,10	471	AF-541-6000-F-5640N
610,00	586,00	8,10	472	AF-541-6100-F-5640N
620,00	596,00	8,10	472	AF-541-6200-F-5640N
630,00	606,00	8,10	ASA 104	AF-541-6300-F-5640N
640,00	616,00	8,10	473	AF-541-6400-F-5640N
650,00	626,00	8,10	473	AF-541-6500-F-5640N
660,00	636,00	8,10	474	AF-541-6600-F-5640N

Further dimensions and intermediate sizes available up to diameter 2500 mm on request.
Dimensions in bold comply with DIN ISO 7425/1 for mounting spaces.

Example for ordering Piston Seal:

AF-541 0320 - B - 5640N

- Type
- Nominal diameter x 10
- Cross-section
- Standard material Slide ring
- O-ring material

Material Key:

Dynamic slide ring
AF-1012 - Virgin PTFE
AF-1022 - PTFE with additive
AF-1024 - PTFE with additive (FDA)
AF-4115 - PTFE with glass fibre
AF-2426 - PFTE with carbon
AF-5640 - PTFE with bronze/additive
AF-1111 - PTFE with Econol
AF-8172 - PUR
AF-7710 - UHMW-PE (PEHD) (FDA)

O-Ring
N - NBR
F - FPM
E - EPDM
S - Silicon
C - Chloroprene

WARNING: Limits of application stated herein are standard values. They could be individually transgressed with due consideration to respective service conditions. In the event of a large duty cycle, pulsating operation and other complex operational conditions, simultaneous transgression of these values is not recommended. Due to a large variety of service conditions that may arise in course of actual use, the company does not take responsibility of or guarantee the functional accuracy of the individual components. Rights for changes are reserved.

Piston Seal
GHT

The compact double acting piston seal GHT was specially developed for use in single part constructions of piston. Various combinations of materials guarantee high functional reliability and endurance life during the totally period of pressure and velocity by low friction, various temperatures and medias.

Special Features:

- Low friction due to PTFE cap
- Excellent shear characteristics
- Good dynamic and static sealing
- High abrasion resitstance, long life period
- Various materials for additional temperatures available
- Best suited for most heavy operations i.e. maschinery for buildings and constructions
- Extensive range of dimensions is aligned to international standard mounting spaces i.e. ISO 5597

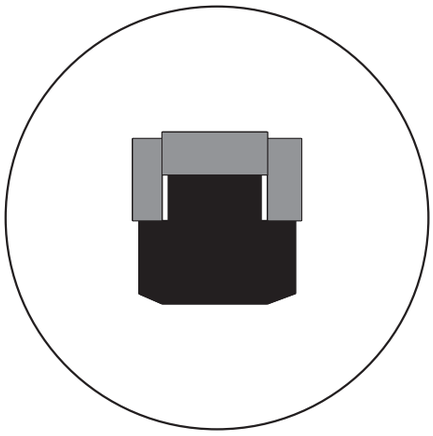

Material	: PTFE-Compound
Operating pressure	: up to 50 MPa (500 bar)
Velocity	: reciprocating to 1,5 m/s
Temperature	: -50 to + 225°C

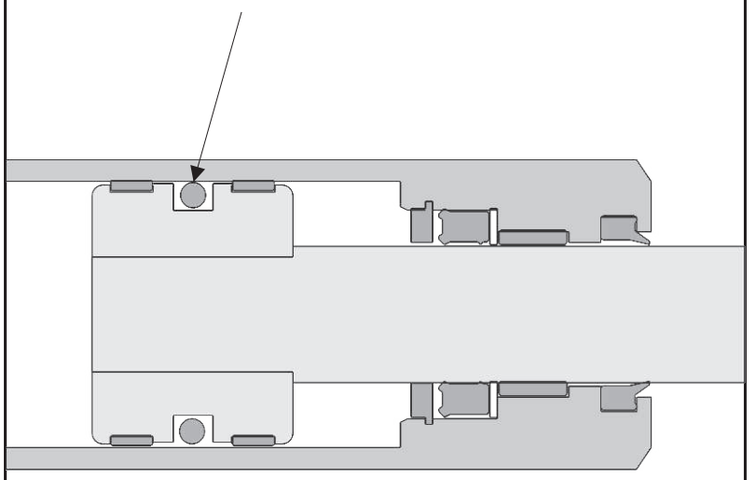

Piston Seal
GHT

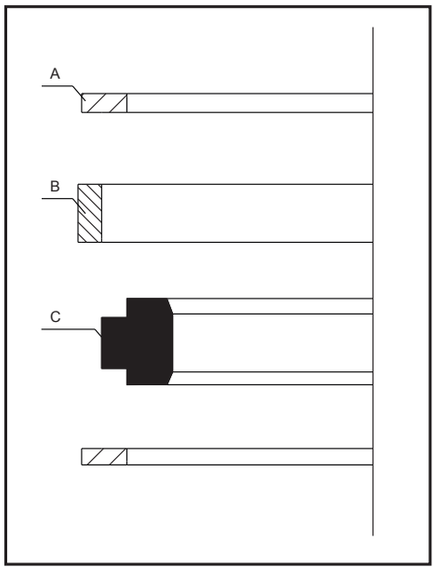

Back-UP Ring (Part A)

The Polyacetal back ring should save the PTFE part against extrusion and protect the sealing system against dirty pieces.

Slide Ring Dynamic (Part B)

Slide ring section is retangular and has been produced for years from PTFE - bronze compound.

The Slide ring shows a high abrasion resistance, inherent stability and additional good extrusion resistance. These properties make the material suitable for the demands of heavy-duty hydraulics and construction industry. Additional we are supporting a special slide ring of Polyurethane for low and middle pressure applications.

Rubber Energizer (Part C)

During the total period of compression the T-formed NBR energizer guarantees reliable radial pressure to the dynamic seal. For applications with additional areas of temperatures there are various materials available.

Piston Seal
GHT

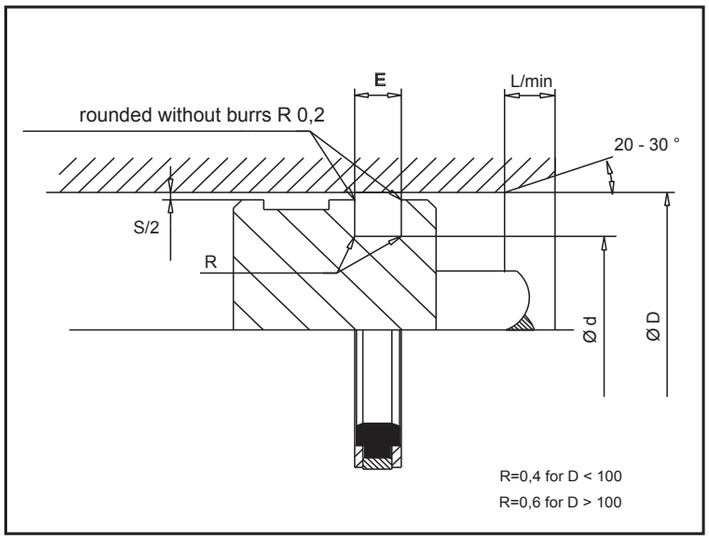

Limitations on Use

Operating pressure up to 35 MPa (350 bar)
Velocity : reciprocating up to 20 m/s
Temperature : -50 to +225 °C

Media for Use

Mineral oil based hydraulic oils, Bio Oils as well as flame resistant pressure liquids on request

Surface Finish

Surfaces	Rmax	Rz	Ra
Housing bore D	2,5 µm	1.6 µm	0,4 µm
Groove d	10,0 µm	6.3 µm	1,6 µm
Groove flanks	16,0 µm	10,0 µm	3,2 µm

Limitations on Use / Diameter Clearance

	Operating pressure	Velocity	Temperature	PU Smax. (mm)	PU p max.	5640N/5640H Smax. (mm)	5640N/5640H p max
5640N	50 MPa (500 bar)	1,5 m/s	-30 + 100 °C	1,00	10 MPa	1,00	30 MPa
5640H	50 MPa (500 bar)	1,5 m/s	-40 + 130 °C	0,70	20 MPa	0,60	50 MPa
PU	40 MPa (400 bar)	0,5 m/s	-40 + 100 °C	0,50	30 MPa		
				0,30	40 MPa		

D H9	d h10	E +0,2	Lmin.	Part N°.
40,00	**30,00**	**8,00**	**5,00**	**GHT 40/30x8**
50,00	36,00	9,00	5,00	GHT 50/36x9
50,00	**40,00**	**8,00**	**5,00**	**GHT 50/40x8**
55,00	41,00	9,00	5,00	GHT 55/41x9
60,00	46,00	9,00	5,00	GHT 60/46x9
60,00	50,00	8,00	5,00	GHT 60/50x8
63,00	48,00	11,00	5,00	GHT 63/48x11
63,00	**53,00**	**8,00**	**5,00**	**GHT 63/53x8**
65,00	50,00	11,00	5,00	GHT 65/50x11
70,00	55,00	11,00	5,00	GHT 70/55x11
70,00	60,00	8,00	5,00	GHT 70/60x8
75,00	60,00	11,00	5,00	GHT 75/60x11
80,00	**65,00**	**11,00**	**5,00**	**GHT 80/65x11**
80,00	65,00	12,50	5,00	GHT 80/65x12,5
85,00	70,00	11,00	5,00	GHT 85/70x11
90,00	75,00	11,00	5,00	GHT 90/75x11
90,00	75,00	12,50	5,00	GHT 90/75x12,5
95,00	80,00	11,00	5,00	GHT 95/80x11
100,00	**85,00**	**12,50**	**5,00**	**GHT 100/85x12,5**
105,00	90,00	12,50	5,00	GHT 105/90x12,5
110,00	95,00	12,50	5,00	GHT 110/95x12,5
115,00	100,00	12,50	5,00	GHT 115/100x12,5
120,00	105,00	12,50	6,50	GHT 120/105x12,5
125,00	102,00	16,00	6,50	GHT 125/102x16
125,00	110,00	12,50	6,50	GHT 125/110x12,5
130,00	107,00	16,00	6,50	GHT 130/107x16

D H9	d h 10	E +0,2	Lmin.	Part N°.
130,00	115,00	12,50	6,50	GHT 130/115x12,5
135,00	112,00	16,00	6,50	GHT 135/112x16
140,00	117,00	16,00	6,50	GHT 140/117x16
140,00	125,00	12,50	6,50	GHT 140/125x12,5
145,00	122,00	16,00	6,50	GHT 145/122x16
150,00	127,00	16,00	6,50	GHT 150/127x16
150,00	135,00	12,50	6,50	GHT 150/135x12,5
160,00	137,00	16,00	6,50	GHT 160/137x16
160,00	145,00	12,50	6,50	GHT 160/145x12,5
165,00	142,00	16,00	6,50	GHT 165/142x16
170,00	147,00	16,00	6,50	GHT 170/147x16
170,00	155,00	16,00	6,50	GHT 170/155x16
180,00	157,00	16,00	6,50	GHT 180/157x16
180,00	165,00	12,50	6,50	GHT 180/165x12,5
190,00	167,00	16,00	6,50	GHT 190/167x16
190,00	175,00	12,50	6,50	GHT 190/175x12,5
200,00	177,00	16,00	6,50	GHT 200/177x16
200,00	180,00	16,00	6,50	GHT 200/180x16
220,00	200,00	16,00	8,00	GHT 220/200x16
225,00	202,00	16,00	8,00	GHT 225/202x16
230,00	210,00	16,00	8,00	GHT 230/210x16
250,00	230,00	16,00	8,00	GHT 250/230x16

Bold text is DIN ISO 5597

Piston Seal
GHT

Example for ordering Piston Seal:

GHT 40 / 30 x 8 - 5640N

Type
Bore diameter D
Groove diameter d
Groove width
Material combination

Material Key:

Slide ring
AF-5640N - PTFE Bronze + NBR
AF-5640H - PTFE Bronze + HNBR
PU -PU + NBR

WARNING: Limits of application stated herein are standard values. They could be individually transgressed with due consideration to respective service conditions. In the event of a large duty cycle, pulsating operation and other complex operational conditions, simultaneous transgression of these values is not recommended. Due to a large variety of service conditions that may arise in course of actual use, the company does not take responsibility of or guarantee the functional accuracy of the individual components. Rights for changes are reserved.

Spring activated lip seal

Piston ASL-Seals

Accofluor spring activated lip seal

ASL-Seals

Type ASL-seal is a single-acting, spring activated PTFE seal for both piston and rod. ASL-seals are appropriate for use as a dynamic seal at slowly rotating or reciprocating movements as well as a shaft e.g. an O-ring in seal or static seal. ASL seals often ,replace rubber seal applications with high or low low temperatures, non-lubricated services, demands on friction, aggressive media, high speeds, high pressures, vacuum etc.

Type ASL-seals can be delivered with many different spring types and materials adjusted to the application demands and so can the PTFE material.

AF-710D-0300 -C -1111VSQ

- Seal series/type
- Rod diameter x 10
- Cross-section
- Material code (body)
- Material code (type of spring)
- Silicone filled

The advantages of series ASL-Seals are e.g.:

- High chemical resistance
- Withstands speeds up to 15 m/s
- Wide temperature range, –254°C – +310°C (depending on the choice of material)
- Withstands pressures up to 40 MPa (standard)
- Higher pressures demand special design
- FDA quality

Accofluor ASL-Seals are designated according to a system that states the seal series/type, dynamic seal diameter, cross-section and choice of material.

Material Key:
Dynamic slide ring

AF-1012 - Virgin PTFE
AF-1022 - PTFE with additive
AF-1024 - PTFE with additive (FDA)
AF-2426 - PFTE with carbon
AF-2413 - PFTE with carbonfiber
AF-5640 - PTFE with bronze/additive
AF-1111 - PTFE with Econol

*)Please see page 78 for different spring types.

All types can be delivered with a special design regarding groove dimensions and material properties in order to obtain optimal solution.

Spring activated lip seal

Piston ASL-Seals

Installation of ASL- Seals

ASL-seals can be installed in O-ring grooves according to AS 568 and BS 1806. PTFE seals are not as elastic as e.g. O-rings of elastomers and should therefore be installed in open grooves. With large diameters or small cross sections, installations in closed or half-closed grooves are possible.

AF-610R

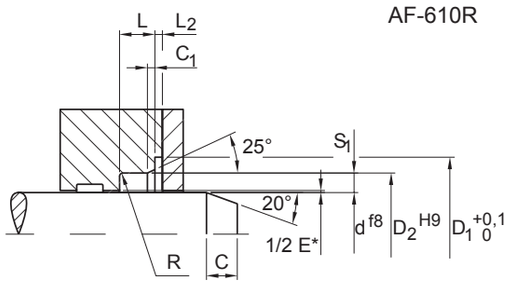

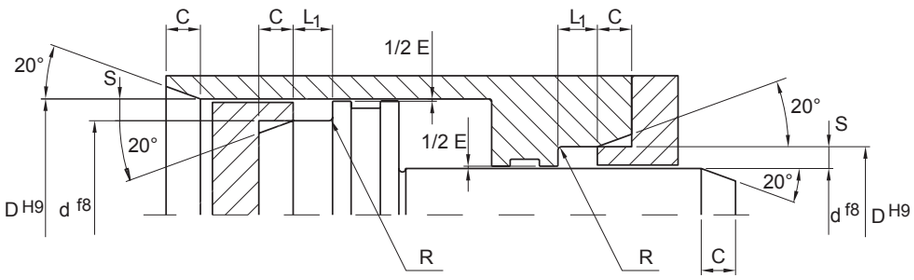

Recomended size range	Cross-section		Groove width		L_2	C_1	With guide ring E*)			C	R max	D_1
	S	S_1	L +0,25 0	L1 +0,25 0			0-10 MPa*)	10-25 MPa*)	25-40 MPa*)			
6-13,9	A 1,45	A 1,45	2,4	3,8	0,8	0,45	0,4	0,3	0,2	3,4	3,4	
14-24,9	B 2,25	B 2,5	3,6	4,65	0,9	0,85	0,5	0,4	0,3	4,2	4,2	d + 9 + 0,2 0
25-45,9	C 3,1	C 3,5	4,8	5,7	1,3	1,35	0,5	0,4	0,3	5,8	5,8	d + 12,5 + 0,2 0
46-124,9	D 4,7	D 5,25	7,1	8,5	1,8	1,8	0,6	0,5	0,4	7,4	7,4	d + 17,5 + 0,3 0
125-	E 6,1	E 7,0	9,5	11,2	2,3	2,8	0,8	0,6	0,5	8,4	8,4	d + 22,5 + 0,3 0

*) Not valid for AF-610R, please contact Accofluor technical department. If the clearance ½ E is < 0,25 mm, a guide ring should not be used.

Spring activated lip seal

Axial ASL-Seals

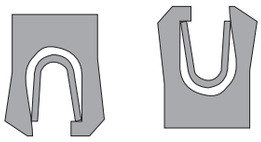

Axial installation of AF-611/711 ASL-Seals

Inside pressure

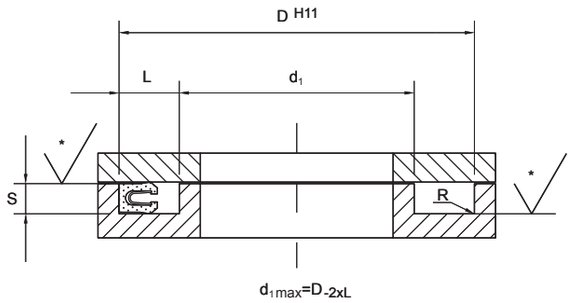

Outside pressure and inside vaccum

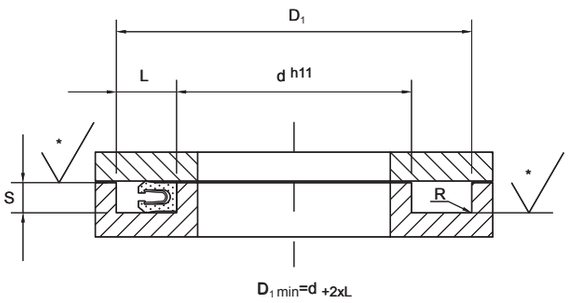

Please see schedule for recommendations regarding surface roughness value for each type of media and movement

Axial seal code	Axial dimension S +0,05	Radial cross-section of groove $L_{min.}$	R_{max}	D_1 +0,2 / 0	d_1 0 / -0,2
A	1,45	2,4	0,2	d + 2 x L	D - 2 x L
B	2,25	3,6	0,4	d + 2 x L	D - 2 x L
C	3,10	4,8	0,6	d + 2 x L	D - 2 x L
D	4,70	7,1	0,8	d + 2 x L	D - 2 x L
E	6,10	9,5	0,8	d + 2 x L	D - 2 x L

Hardware design, open and closed grooves

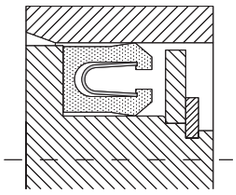

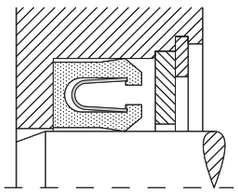

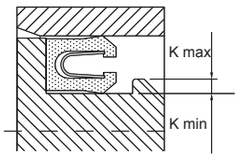

Kmax=dx0,05

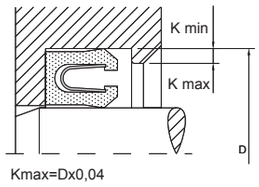

Kmax=Dx0,04

Cross-section	S	K_{min}
A	1,45	0,35
B	2,25	0,55
C	3,10	0,75
D	4,70	0,80
E	6,10	0,90

Surface roughness value– ASL-Seals

Medium	Recommended surface roughness value		
	Reciprocating Movements	Rotating	Static
Low molecular gases Media with low surface tension Low temperature Hydrogen, helium, freon, nitrogen	R_a 0,2 µm	R_a 0,2 µm	R_a 0,3 µm
Low viscosity fluids and gases	R_a 0,3 µm	R_a 0,2 µm	R_a 0,6 µm
Medium to low viscosity fluids Hydraulic fluids, water, skydrol Transmission oil	R_a 0,4 µm	R_a 0,2 µm	R_a 0,8 µm

Spring activated lip seal

Piston/rod ASL-Seals

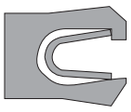

1) All designs can be delivered with a Helical or slant coil spring. See page 78 for different spring types.

ASL-Seal

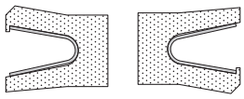

AF-610A AF-710A

Rod/piston, asymmetric with a wiper lip

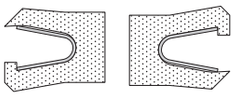

AF-610D AF-710D

Rod/piston,asymmetric with a strong dynamic lip

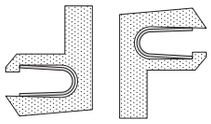

AF-610R AF-710R

Rod/piston shaft seal with a flange and a strong dynamic lip

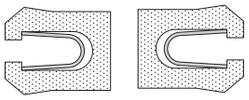

AF-610S AF-710S

Rod/piston, symmetrical for static applications

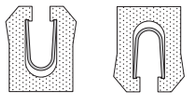

AF-711S AF-611S

Seal for outside/inside pressure could be made in all above variants,

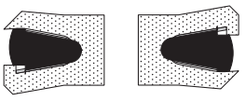

AF-610D...VSQ A F 710D...VSQ

Rod/piston, asymmetric with a strong dynamic lip,silicone filled could be made in all above variants,

Type of springs for ASL- Seals

Spring type	Spring force	Spring material	Spring code
Slant coil spring 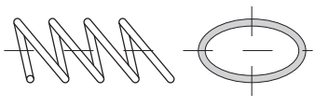	Low	S Stainless steel 301	SS
		E Elgiloy	SE
		H Hastelloy C276	SH
V spring (basic design) 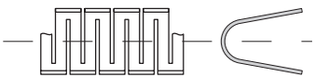	Medium	S Stainless steel 301	VS
		E Elgiloy	VE
		H Hastelloy C276	VH
Helical band spring	High	S Stainless steel 301	HS
		E Elgiloy	HE
		H Hastelloy C276	HH

SPRING TYPES

Code Application field

S Less aggressive media
E Aggressive media
H Aggressive media and very high temperatures
SS Applications with low friction
VS Standard applications
HS Static applications and low temperature

Proposed application for ASL-Seals

Type	Seal number	Type of installation	Static*)	Reciprocating*)	Rotating*)
	AF-710A	Piston	2	1	3
	AF-610A	Rod	2	1	3
	AF-710D	Piston	3	1	2
	AF-610D	Rod	3	1	2
	AF-610R	Rod	3	2	1
	AF-710S/AF-610S	Piston/Rod	1	2	3
	AF-611	Flange seal sealing from inside	1	-	2
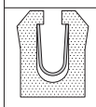	AF-711	Flange seal sealing from outside	1	-	2
	AF-611-XXXX-X	Rod special design	1	1	1

*) 1 = Excellent 2 = Acceptable 3 = Less appropriate

Spring activated lip seal
Piston/rod ASL-Seals

Speical ASL-Seals

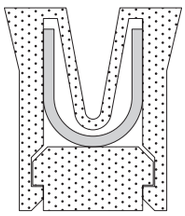

Sanitary seal

The sanitary seal spring is PTFE encapsulated which makes the seal easy to clean. This type of seal is therefore suitable for the food industry.

High pressure seal

Standard seal series with two back-up rings for reciprocating movements.

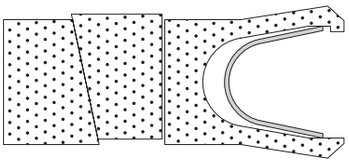

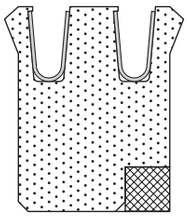

High pressure seal

This SU seal has an integrated back-up ring in order to withstand high pressures. The seal can be adjusted to the groove when the standard sizes cannot be used.

Ball valve seal

The seal is secured in its groove and thereby prevented from being blown out.

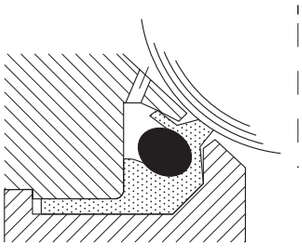

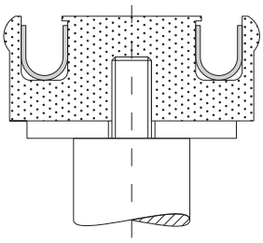

Integrated piston seal

In applications with aggressive media a design with seals integrated in the piston could be a suitable alternative.

Double acting piston seal

Design with combined guide and double-acting seals integrated in the piston, appropriate for aggressive media.

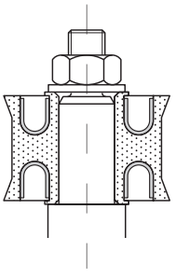

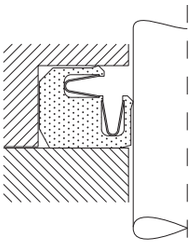

Rotating/Turning

Special design for rotating or turning movements and for static sealing, both radially and axially.

Valve seal

Designed to prevent deformation of the dynamic sealing lip.

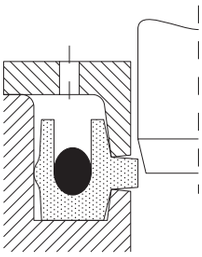

Piston Seal
P

Piston rings from specially cast materials with joints empervious to medium find use in exceptionally demanding appliances in temperature and velocity. However, in contrast to other elastomer applications, they are not sensitive to impact pressures.

Special Features::

- Single part construction, with slit
- Good dynamic and static sealing through patented joint
- Good abrasion resistance, long life
- Extreme temperature range of application
- Overtravelling of cylinder bores possible without damage
- In combination with elastomer seals, this can be put to protective use against impact pressure and diesel effects

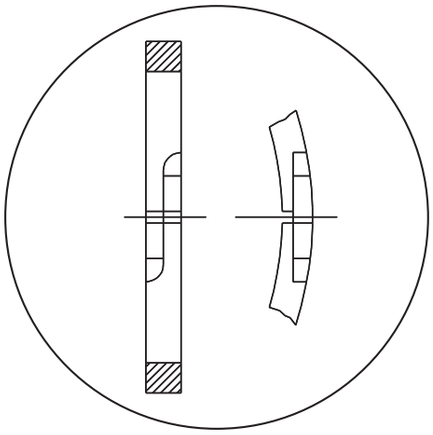

Material	: speciall cast material
Operating pressure	: up to 200 MPa (2000 bar)
Velocity	: reciprocating to 40 m/s

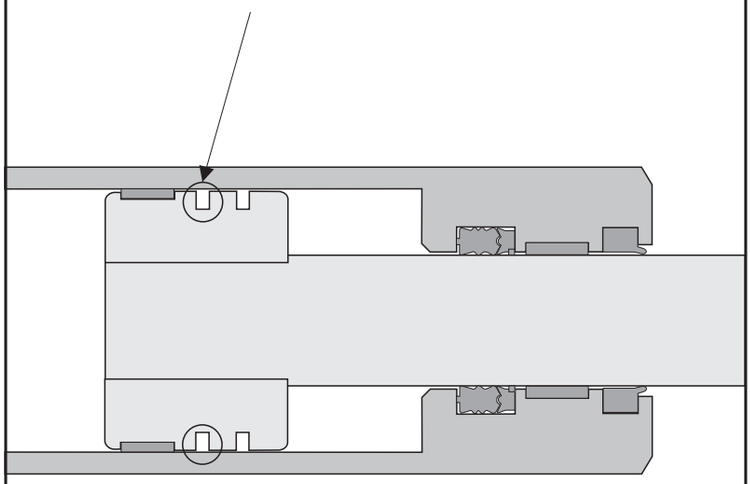

Piston Seal
P

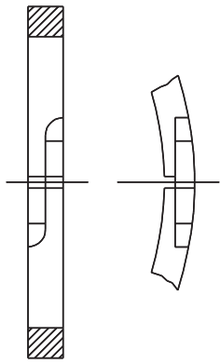

fig. 1

Areas of Application:

Since complete static sealing is not achievable with metalic piston rings, such rings find use in cylinders where piston positions are defined using other external mechanical set up for a long time. Examples of applications where even small amounts of friction and impact-free running with very slow movement assume significance are automotive engines, drives and servomechanisms. Cylinders on vehicles with container elevators and those for waste materials transport are often provided with metallic piston rings. In specific cases, these cylinders are designed as doubleaction telescopic cylinders. Metallic piston rings are meant moreover for cylinders of hydraulic presses that operate on intermittent compressive forces at high operational pressures. Pistons in hydro pumps and motors are normally sealed with metallic piston rings. Metallic piston rings can also serve to augment elastomer seals.
In this case, they (metallic) are applied externally to elastomer seals and thus serve to protect them against pressure surges, diesel effect and foreign bodies.

Method of Operation:

Metallic piston rings are a sealing element that are manufactured with high precision of dimension and form. The carefully machined outer diameter is vertically adjusted to the parallel flat finish faces to a close tolerance. Edge width is normally lower than the axial transverse dimension, so that the form is rectangular and the longer side is in contact with the cylinder area.

Piston ring is meant for use in piston groove. Normal width 25 to 200 micrometer (depending on piston size) is larger than the maximal piston ring width (see fig. 2). If axial play is too small, choking hinders advancement of oil pressure to inner diameter of piston ring. Sealing pressure against sides of the groove thus becomes very small, leading to leakage loss.

With too large a play, rapid pressure variations bring about lateral displacement of piston ring and pressure fluid is let through.

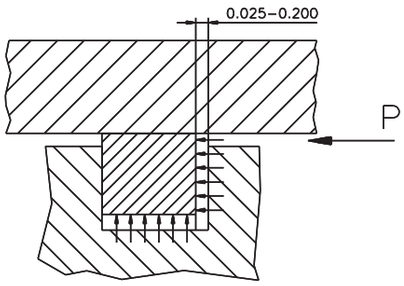

fig. 2

P as Protection against Pressure Surge:

For use of P to protect elastomer seals against pressure surges and diesel effect (see fig. 3), piston ring must have small axial grooves, so as to avoid pressure build-up between elastomer seal and piston ring.

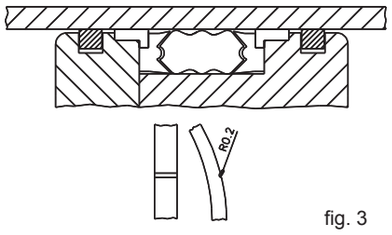

fig. 3

Number of Piston Rings per Piston:

When two piston rings are used instead of one, leakage reduces by 15%, and the incorporation of a third one causes further reduction by 10-15%.
The most important reason why a three-ring combination is most useful in case of P is, that the two outer rings protect the inner one from foreign bodies. During use of P normally used with one ring, optimal sealing capacity is achieved with two seals (two grooves).

For details on factors about leakage and transport of oil as well as surface finish, please write to us for our special brochure P.

Piston Seal
P

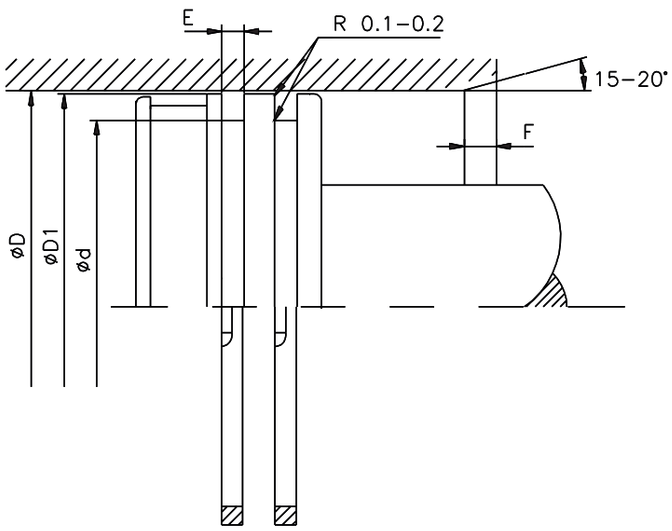

Limitations on Use

Operating pressure : up to 200 MPa (2000 bar)
Velocity : reciprocating to 40 m/s

Media for Use

Mineral oil based pressure fluids, flame resistant fluids (HFA, HFB, HFC), Bio Oils, water, air and other materials as per O-ring materials.

Surface Finish

Surfaces	Rmax	Rz	Ra
Housing bore D	2,5 µm	1,6 µm	0,4 µm
Groove diameter d	10,0 µm	6,3 µm	1,6 µm
Groove flanks	10,0 µm	6,3 µm	1,6 µm

Slide in Bevels

Nominal Diameter D [mm]	Length of Bevel F [mm]
- 60	4
61 - 120	5
121 - 250	6
181 - 250	8
251 - 400	10

D H9/H8	d -0,5	E +0,13	D1 k11	Part N°.
40,00	35,00	3,20	39,50	P 40
45,00	39,00	3,20	44,50	P 45
50,00	44,00	3,20	49,50	P 50
55,00	49,00	4,80	54,00	P 55
60,00	53,00	4,80	59,00	P 60
63,00	56,00	4,80	62,00	P 63
65,00	58,00	4,80	64,00	P 65
70,00	62,00	4,80	68,50	P 70
75,00	67,00	4,80	73,50	P 75
75,00	66,00	5,04	73,50	P 75/S
80,00	72,00	4,80	78,50	P 80
85,00	77,00	4,80	83,50	P 85
90,00	81,00	4,80	88,50	P 90
95,00	86,00	4,80	93,50	P 95
100,00	90,00	6,40	98,50	P 100
100,00	90,00	4,15	98,50	P 100/H
105,00	95,00	6,40	103,00	P 105
110,00	99,00	6,40	108,00	P 110
110,00	99,00	4,15	108,00	P 110/H
114,00	103,00	6,40	112,00	P 114
115,00	104,00	6,40	113,00	P 115
115,00	104,00	3,20	113,00	P 115/S
120,00	109,00	6,40	118,00	P 120
120,00	108,00	3,54	118,00	P 120/S
125,00	113,00	6,40	123,00	P 125
130,00	118,00	6,40	128,00	P 130
135,00	122,00	6,40	132,50	P 135

D H9/H8	d -0,5	E +0,13	D1 k11	Part N°.
140,00	127,00	6,40	137,50	P 140
145,00	132,00	6,40	142,50	P 145
150,00	137,00	6,40	147,50	P 150
150,00	136,00	5,04	147,50	P 150/S
155,00	141,00	7,95	152,00	P 155
160,00	146,00	7,95	157,00	P 160
165,00	151,00	7,95	162,00	P 165
170,00	155,00	7,95	167,00	P 170
175,00	160,00	7,95	172,00	P 175
180,00	164,00	7,95	177,00	P 180
180,00	164,00	6,08	177,00	P 180/S
185,00	169,00	7,95	182,00	P 185
190,00	174,00	7,95	187,00	P 190
195,00	178,00	7,95	192,00	P 195
200,00	183,00	7,95	196,00	P 200
200,00	183,00	9,55	196,00	P 200/S
210,00	192,00	9,60	206,00	P 210
220,00	202,00	9,60	216,00	P 220
230,00	211,00	9,60	226,00	P 230
240,00	221,00	9,60	236,00	P 240
250,00	230,00	9,60	246,00	P 250
260,00	240,00	9,60	256,00	P 260
270,00	249,00	9,60	266,00	P 270
280,00	258,00	9,60	275,00	P 280
300,00	277,00	9,60	295,00	P 300
320,00	296,00	12,80	315,00	P 320
330,00	306,00	12,80	325,00	P 330
350,00	324,00	12,80	344,00	P 350
360,00	333,00	12,80	354,00	P 360
400,00	372,00	12,80	394,00	P 400

Extensive range of inch measurement diagrams available on request.

Piston Seal
P

Example for ordering Piston Seal:

P 140 / S

Type
Bore diameter D
Special dimension

WARNING: Limits of application stated herein are standard values. They could be individually transgressed with due consideration to respective service conditions. In the event of a large duty cycle, pulsating operation and other complex operational conditions, simultaneous transgression of these values is not recommended. Due to a large variety of service conditions that may arise in course of actual use, the company does not take responsibility of or guarantee the functional accuracy of the individual components. Rights for changes are reserved.

product index

Profile	Type	Specification	Limitations of Use: Temperature	Limitations of Use: Pressure	Limitations of Use: Velocity	Material: Sealing element	Page
	S	Compact seal	-30 up to +110° C	up to 30 MPa (300 bar)	up to 0,5 m/s	NBR fabric	86
	SG	Comact seal with anti-extrusion ring	-30 upt to +110° C	up to 45 MPa (450 bar)	up to 0,5 m/s	NBR fabric	86
	TGO	Compact seal	-30 up to +110° C	up to 25 MPa (250 bar)	up to 0,5 m/s	NBR fabric	91
	AG	Compact seal (3-pieces)	-30 up to +110° C	up to 70 MPa (700 bar)	up to 0,5 m/s	NBR	93
	CH5 CH7	V - ring 5-pieces 7-pieces	-30 up to +110° C	up to 40 MPa (400 bar) up to 50 MPa (500 bar)	up to 0,5 m/s	NBR fabric	97
	UN RSA	U - ring symetric	-40 up to +110° C	up to 40 MPa (400 bar)	up to 0,8 m/s	AU Polyurethane	102
	SI	U - ring asymetric	-40 up to +110° C	up to 40 MPa (400 bar)	up to 0,8 m/s	AU Polyurethane	102
	SI/L *	U - ring modified with second lip	-40 up to +110° C	up to 40 MPa (400 bar)	up to 0,8 m/s	AU Polyurethane	102
	SI/LA	U - ring modified with second lip and anti-extrusion ring	-40 up to +110° C	up to 50 MPa (500 bar)	up to 0,8 m/s	AU Polyurethane	102
	TS	Compact U - ring	-40 up to +110° C	up to 40 MPa (400 bar)	up to 0,8 m/s	AU Polyurethane	116
	TS/L *	Compact U - ring modified with second lip	-40 up to +110° C	up to 40 MPa (400 bar)	up to 0,8 m/s	AU Polyurethane	116
	TS/LA	Compact U - ring with second lip and anti-extrusion ring	-40 up to +110° C	up to 50 MPa (500 bar)	up to 0,8 m/s	AU Polyurethane	116
	TTH *	Compact U - ring with second lip and anti-extrusion ring	-40 up to +110° C	up to 50 MPa (500 bar)	up to 0,5 m/s	AU Polyurethane	123
	AF-441	Single acting with O - ring	-40 up to +200° C	up to 40 MPa (400 bar)	up to 15 m/s	PTFE Compound	126
	AF-411	Double acting with O - ring	-40 up to +200° C	up to 40 MPa (400 bar)	up to 15 m/s	PTFE Compound	130
	ASL	Single acting with spring	-150 up to +225° C	up to 35 MPa (350 bar)	up to 20 m/s	PTFE Compound	134

* Most common types as standard

Regarding the great variety of practice applications, please ask our customer service department personally for any missing types or dimensions.

Rod Seal
S+SG

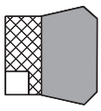

Compact rod seals in the S and SG series are meant for a universal range of hydraulics applications. The rubber-fabric combination has been successfully used for many years, specifically for Bio Oil. Radially prestressed sealing edges guarantee good sealing even with impact pressures and high pressure fluctuations in addition to low pressure zones.
S is manufacturd without back-up ring.
The design SG with a back-up ring enhances operational security against split extrusion with high pressure surges.

Special Features:

- Lowest stick-slip tendency due to NBR fabric material combination
- Very good dynamic and static sealing
- Extrusion protection due to fabric reinforcement
- High pressure absorption possible due to separate thrust ring
- All dimensions (in SG as 40 mm onward) in closed grooves

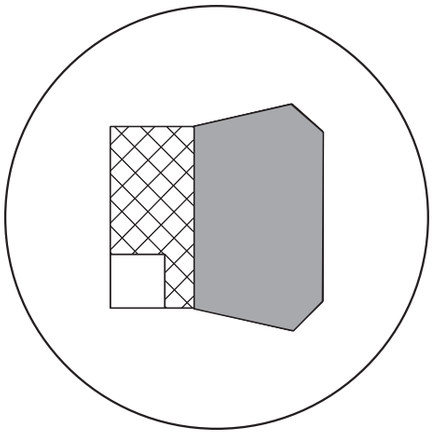

Material	:	NBR fibre reinforced
Operating pressure	:	S 20 to 30 MPa (200-300 bar) SG 20 to 45 MPa (200-450 bar)
Velocity	:	reciprocating to 0.5 m/s
Temperature	:	-30 to +110 °C

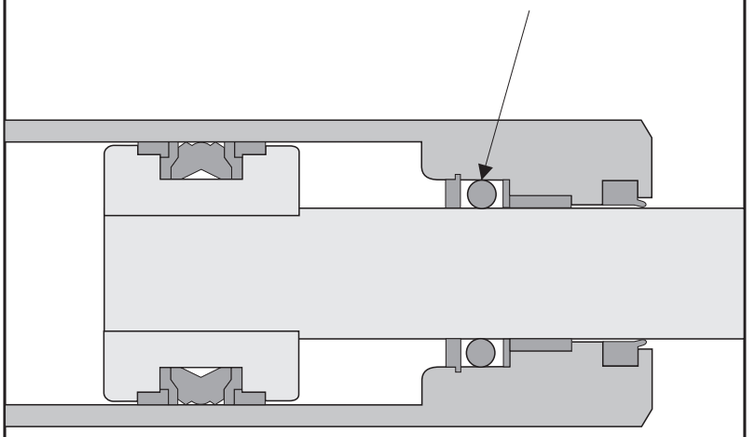

Rod Seal
S+SG

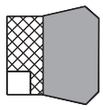

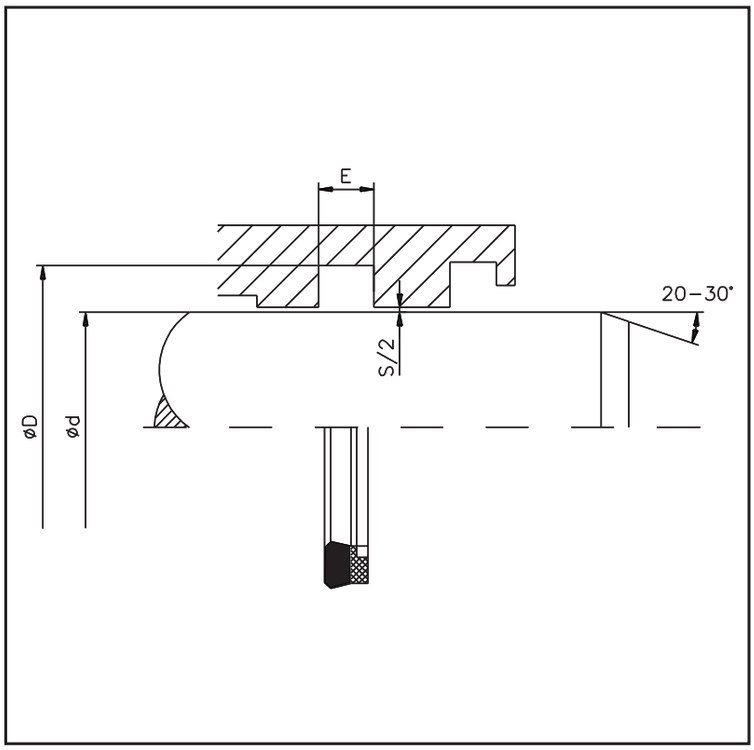

Limitations on Use

Operating pressure	:	SG up to 30 MPa (300 bar) SG up to 45 MPa (450 bar)
Velocity	:	reciprocating to 0.5 m/s
Temperature	:	-30 to +110 °C

Media for Use

Mineral oil based hydraulic oils, flame resistant pressure media and emulsions (HFA, HFB, HFC), non-polluting pressure fluids (Bio Oils).

Surface Finish

Surfaces	Rz	Ra
Rod Diameter d	2,0 µm	0,3 µm
Groove Diameter D	4,0 µm	0,8 µm
Groove flanks	8,0 µm	1,8 µm

Diameter Clearance

Max. Diameter Clearance S [mm]	Max. Pressure [MPa]	
	S	SG
0,40	10,0	20,0
0,30	15,0	25,0
0,20	20,0	35,0
0,10	30,0	45,0

d f8/h9	D H10	E +0,2	Part N° S	Part N° SG
5,00	12,00	6,50	S 5/12x6,5	
6,00	13,00	6,50	S 6/13x6,5	
8,00	15,00	6,50	S 8/15x6,5	
12,00	19,00	6,50	S 12/19x12,5	
12,00	23,00	7,50		SG 12/23x7,5
14,00	22,00	6,50	S 14/22x6,5	
14,00	22,00	7,00	S 14/22x7	
15,00	23,00	6,30	S 15/23x6,3	
15,00	27,00	7,00	S 15/27x7	SG 15/27x7
16,00	24,00	6,40	S 16/24x6,4	
16,00	24,00	7,00	S 16/24x7	SG 16/24x7
16,00	28,00	7,50		SG 16/28x7,5
18,00	25,00	6,00		SG 18/25x6
18,00	26,00	6,50	S 18/26x6,5	
18,00	26,00	7,00	S 18/26x7	
18,00	28,00	6,30	S 18/28x6,3	SG 18/28x6,3
18,00	30,00	7,50		SG 18/30x7,5
20,00	27,00	6,50	S 20/27x6,5	SG 20/27x6,5
20,00	28,00	6,30	S 20/28x6,3	SG 20/28x6,3
20,00	28,00	7,00	S 20/28x7	SG 20/28x7
20,00	30,00	6,50	S 20/30x6,5	
20,00	30,00	8,50	S 20/30x8,5	SG 20/30x8,5
20,00	32,00	9,50		SG 20/32x9,5
20,00	32,00	10,00		SG 20/32x10
20,00	35,00	11,50	S 20/35x11,5	
22,00	30,00	7,00	S 22/30x7	
22,00	34,00	9,50	S 22/34x9,5	SG 22/34x9,5
22,00	35,00	10,00	S 22/35x10	SG 22/35x10
24,00	34,00	6,50	S 24/34x6,5	
25,00	33,00	6,40		SG 25/33x6,4
25,00	35,00	8,50		SG 25/35x8,5

d f8/h9	D H10	E +0,2	Part N° S	Part N° SG
25,00	35,00	9,00	S 25/35x9	SG 25/35x9
25,00	37,00	10,50		SG 25/37x10,5
25,00	38,00	10,00	S 25/38x10	SG 25/38x10
25,00	38,00	10,50		SG 25/38x10,5
25,00	44,00	12,50	S 25/44x12,5	
26,00	40,00	10,00	S 26/40x10	
27,00	35,00	6,50	S 27/35x6,5	
28,00	36,00	6,40	S 28/36x6,4	
28,00	38,00	8,00	S 28/38x8	SG 28/38x8
28,00	38,00	8,50		SG 28/38x8,5
28,00	40,00	9,50	S 28/40x9,5	SG 28/40x9,5
28,00	41,00	10,00	S 28/41x10	
30,00	38,00	6,40	S 30/38x6,4	SG 30/38x6,4
30,00	40,00	7,50	S 30/40x7,5	SG 30/40x7,5
30,00	40,00	9,00		SG 30/40x9
30,00	40,00	10,50		SG 30/40x10,5
30,00	40,00	11,00		SG 30/40x11
30,00	42,00	10,50		SG 30/42x10,5
30,00	45,00	9,00	S 30/45x9	SG 30/45x9
30,00	45,00	9,50		SG 30/45x9,5
30,00	45,00	11,00		SG 30/45x11
30,00	50,00	14,50	S 30/50x14,5	SG 30/50x14,5
32,00	40,00	6,40	S 32/40x6,4	
32,00	40,00	9,00	S 32/40x9	SG 32/40x9
32,00	42,00	8,50		SG 32/42x8,5
32,00	44,00	11,50	S 32/44x11,5	SG 32/44x11,5
32,00	45,00	10,00		SG 32/45x10
32,00	46,00	10,50		SG 32/46x10,5
34,92	50,80	11,60	S 34,92x50,8x11,6	
35,00	43,00	6,50	S 35/43x6,5	SG 35/43x6,5
35,00	45,00	7,00		SG 35/45x7

Rod Seal
SG

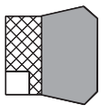

d f8/h9	D H10	E +0,2	Part N° S	Part N° SG
35,00	45,00	8,00	S 35/45x8	SG 35/45x8
35,00	45,00	10,50		SG 35/45x10,5
35,00	45,00	11,00		SG 35/45x11
35,00	45,00	13,50	S 35/45x13,5	
35,00	50,00	11,00		SG 35/50x11
35,00	50,00	11,50	S 35/50x11,5	
35,00	50,00	12,00		SG 35/50x12
36,00	43,00	6,50	S 36/43x6,5	SG 36/43x6,5
36,00	44,00	6,50	S 36/44x6,5	
36,00	46,00	8,50	S 36/46x8,5	SG 36/46x8,5
36,00	48,00	9,50	S 36/48x9,5	SG 36/48x9,5
37,72	50,80	9,00	S 37,72/50,8x9	
38,00	50,00	9,50	S 38/50x9,5	
38,00	55,00	11,00		SG 38/55x11
40,00	48,00	6,50		SG 40/48x6,5
40,00	50,00	8,00	S 40/50x8	SG 40/50x8
40,00	50,00	10,00	S 40/50x10	SG 40/50x10
40,00	50,00	10,50		SG 40/50x10,5
40,00	50,00	11,00		SG 40/50x11
40,00	50,00	13,50	S 40/50x13,5	
40,00	52,00	9,50		SG 40/52x9,5
40,00	52,00	11,00		SG 40/52x11
40,00	55,00	7,50	S 40/55x7,5	
40,00	55,00	8,00		SG 40/55x8
40,00	55,00	11,00	S 40/55x11	SG 40/55x11
40,00	60,00	10,50		SG 40/60x10,5
40,00	60,00	11,00		SG 40/60x11
40,00	60,00	14,50		SG 40/60x14,5
42,00	50,00	6,50	S 42/50x6,5	
43,00	53,00	9,00	S 43/53x9	
44,45	60,32	11,60	S 44,45/60,32x11,6	
45,00	52,00	10,50	S 45/52x10,5	
45,00	53,00	6,50	S 45/53x6,5	
45,00	53,00	8,50		SG 45/53x8,5
45,00	53,00	11,00		SG 45/53x11
45,00	55,00	8,00	S 45/55x8	SG 45/55x8
45,00	55,00	11,00	S 45/55x11	SG 45/55x11
45,00	60,00	10,50		SG 45/60x10,5
45,00	60,00	11,00		SG 45/60x11
45,00	63,00	11,00	S 45/63x11	SG 45/63x11
45,00	65,00	14,50		SG 45/65x/14,5
46,00	54,00	8,00	S 46/54x8	
46,00	56,00	8,00	S 46/56x8	
48,00	60,00	7,00	S 48/60x7	
48,00	60,00	11,00		SG 48/60x11
50,00	58,00	12,50	S 50/58x12,5	
50,00	60,00	8,00		SG 50/60x8
50,00	60,00	10,00		SG 50/60x10
50,00	60,00	10,50		SG 50/60x10,5
50,00	62,00	9,50		SG 50/62x9,5
50,00	62,00	10,00		SG 50/62x10
50,00	65,00	11,00		SG 50/65x11
50,00	70,00	14,50		SG 50/70x14,5
50,80	66,67	11,50	S 50,80/66,67x11,5	
53,44	63,50	7,00	S 53,44/63,5x7	
54,00	66,00	9,50	S 54/66x9,5	
55,00	65,00	8,00	S 55/65x8	SG 55/65x8
55,00	65,00	11,00	S 55/65x11	SG 55/65x11
55,00	65,00	13,50		SG 55/65x13,5
55,00	70,00	10,50		SG 55/70x10,5
55,00	75,00	14,50		SG 55/75x14,5

d f8/h9	D H10	E +0,2	Part N° S	Part N° SG
56,00	66,00	8,00	S 56/66x8	
56,00	66,00	11,00		SG 56/66x11
56,00	71,00	10,50	S 56/71x10,5	SG 56/71x10,5
56,00	71,00	12,50		SG 56/71x12,5
56,00	76,00	14,50	S 56/76x14,5	
57,00	67,00	8,00	S 57/67x8	
57,15	69,85	10,00	S 57,15/69,85x10	
60,00	68,00	12,50	S 60/68x12,5	
60,00	69,50	7,00	S 60/69,5x7	
60,00	70,00	8,00	S 60/70x8	
60,00	70,00	10,00		SG 60/70x10
60,00	70,00	11,00		SG 60/70x11
60,00	70,00	13,00		SG 60/70x13
60,00	72,00	10,00	S 60/72x10	SG 60/72x10
60,00	75,00	13,00		SG 60/75x13
60,00	80,00	14,50		SG 60/80x14,5
61,00	69,00	8,50	S 61/69x8,5	
63,00	75,00	11,00	S 63/75x11	
63,00	78,00	10,50		SG 63/78x10,5
63,00	83,00	14,50	S 63/83x14,5	SG 63/83x14,5
65,00	75,00	13,50	S 65/75x13,5	SG 65/75x13,5
65,00	77,00	9,60	S 65/77x9,6	
65,00	80,00	11,50		SG 65/80x11,5
65,00	80,00	12,50		SG 65/80x12,5
65,00	85,00	14,50		SG 65/85x14,5
68,00	79,40	10,00	S 68/79,4x10	
70,00	80,00	8,00	S 70/80x8	
70,00	80,00	13,00		SG 70/80x13
70,00	82,00	9,60	S 70/82x9,6	
70,00	84,00	12,50	S 70/84x12,5	SG 70/84x12,5
70,00	85,00	12,00		SG 70/85x12
70,00	85,00	12,50		SG 70/85x12,5
70,00	90,00	14,50		SG 70/90x14,5
72,00	84,00	6,00	S 72/84x6	
75,00	85,00	8,00	S 75/85x8	
75,00	85,00	12,50		SG 75/85x12,5
75,00	87,00	10,00	S 75/87x10	
75,00	90,00	11,50	S 75/90x11,5	SG 75/90x11,5
75,00	95,00	14,50		SG 75/95x14,5
76,00	84,00	8,50	S 76/84x8,5	
77,00	87,00	8,00	S 77/87x8	
78,00	90,00	12,00	S 78/90x12	
78,00	90,00	12,50		SG 78/90x12,5
80,00	90,00	8,00	S 80/90x8	
80,00	90,00	13,00		SG 80/90x13
80,00	92,00	9,60	S 80/92x9,6	
80,00	95,00	10,50		SG 80/95x10,5
80,00	95,00	12,00		SG 80/95x12
80,00	95,00	13,00		SG 80/95x13
80,00	96,00	10,50	S 80/96x10,5	SG 80/96x10,5
80,00	100,00	12,00		SG 80/100x12
80,00	100,00	12,50		SG 80/100x12,5
80,00	100,00	14,50		SG 80/100x14,5
84,00	94,00	8,00	S 84/94x8	
85,00	95,00	8,00	S 85/95x8	
85,00	97,00	9,60	S 85/97x9,6	
85,00	100,00	12,00	S 85/100x12	SG 85/100x12
85,00	100,00	12,50		SG 85/100x12,5
85,00	105,00	14,80		SG 85/105x14,8
85,72	104,77	14,80	S 85,72/104,7x14,8	
88,90	107,95	12,70	S 88,9/107,95x12,7	

Rod Seal
S+SG

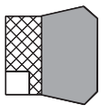

d f8/h9	D H10	E +0,2	Part N° S	Part N° SG
88,90	114,30	19,50	S 88,9/114,3x19,5	
90,00	100,00	10,50	S 90/100x10,5	SG 90/100x10,5
90,00	102,00	9,60	S 90/102x9,6	
90,00	105,00	12,50		SG 90/105x12,5
90,00	106,20	10,80	S 90/106,2x10,8	
90,00	110,00	12,50		SG 90/110x12,5
90,00	110,00	14,50		SG 90/110x14,5
91,00	99,00	8,50	S 91/99x8,5	
95,00	105,00	11,00	S 95/105x11	SG 95/105x11
95,00	107,00	12,50	S 95/107x12,5	
95,00	115,00	14,50		SG 95/115x14,5
95,25	114,30	13,50	S 95,25/114,3x13,5	
96,00	105,00	11,50	S 96/105x11,5	
98,00	107,50	7,00	S 98/107,5x7	
100,00	113,00	13,50		SG 100/113x13,5
100,00	115,00	11,50	S 100/115x11,5	
100,00	115,00	12,50		SG 100/115x12,5
100,00	120,00	12,00		SG 100/120x12
100,00	120,00	14,50		SG 100/120x14,5
100,00	125,00	13,30	S 100/125x13,3	
104,00	120,00	11,20	S 104/120x11,2	
105,00	115,00	11,00	S 105/115x11	SG 105/115x11
105,00	120,00	12,00	S 105/120x12	
105,00	120,00	13,50		SG 105/120x13,5
105,00	120,00	15,50		SG 105/120x15,5
105,00	125,00	12,50	S 105/125x12,5	SG 105/125x12,5
107,95	133,35	19,50	S 107,95/133,3x19,5	
110,00	120,00	11,00		SG 110/120x11
110,00	125,00	12,00		SG 110/125x12
110,00	130,00	10,50		SG 110/130x10,5
110,00	130,00	12,50		SG 110/130x12,5
110,00	130,00	15,50		SG 110/130x15,5
110,00	135,00	15,50	S 110/135x15,5	SG 110/135x15,5
114,30	139,70	19,50	S 114,3/139,7x19,5	
115,00	125,00	8,00	S 115/125x8	
115,00	130,00	12,50	S 115/130x12,5	
115,00	135,00	15,50		SG 115/135x15,5
115,00	135,00	16,00		SG 115/135x16
118,00	130,00	12,50	S 118/130x12,5	
120,00	130,00	11,00		SG 120/130x11
120,00	130,00	12,50		SG 120/130x12,5
120,00	135,00	12,50	S 120/135x12,5	
120,00	140,00	12,50		SG 120/140x12,5
120,00	140,00	16,00		SG 120/140x16
120,00	145,00	18,80	S 120/145x18,8	
121,20	150,00	14,50		SG 121,2/150x14,5
125,00	140,00	12,50	S 125/140x12,5	SG 125/140x12,5
125,00	150,00	14,50		SG 125/150x14,5
125,00	150,00	15,50		SG 125/150x15,5
130,00	140,00	8,00	S 130/140x8	
130,00	145,00	9,50		SG 130/145x9,5
130,00	145,00	13,00		SG 130/145x13
130,00	145,00	15,00	S 130/145x15	
130,00	150,00	16,00	S 130/150x16	SG 130/150x16
130,00	155,00	18,80	S 130/155x18,8	
135,00	150,00	9,50		SG 135/150x9,5

d f8/h9	D H10	E +0,2	Part N° S	Part N° SG
140,00	150,00	10,00	S 140/150x10	
140,00	150,00	11,00		SG 140/150x11
140,00	150,00	12,50		SG 140/150x12,5
140,00	155,00	13,00	S 140/155x13	
140,00	160,00	12,50		SG 140/160x12,5
140,00	160,00	14,50		SG 140/160x14,5
140,00	160,00	16,00	S 140/160x16	
140,00	165,00	15,50		SG 140/160x15,5
145,00	157,70	10,00	S 145/157,7x10	
150,00	165,00	13,00		SG 150/165x13
150,00	170,00	14,50		SG 150/170x14,5
150,00	170,00	16,00	S 150/170x16	
150,00	180,00	14,00	S 150/180x14	
155,00	170,00	9,50	S 155/170x9,5	
160,00	175,00	16,00	S 160/175x16	
160,00	180,00	14,50		SG 160/180x14,5
160,00	180,00	16,00	S 160/180x16	
160,00	185,00	15,50		SG 160/185x15,5
165,10	177,80	10,00	S 165,1/177,8x10	
170,00	182,70	10,00	S 170/182,7x10	SG 170/182,7x10
170,00	200,00	23,50	S 170/200x23,5	
180,00	200,00	14,50		SG 180/200x14,5
180,00	200,00	16,00	S 180/200x16	
180,00	210,00	20,50	S 180/210x20,5	
184,15	215,90	25,80	S 184,15/215,9x25,8	
188,00	203,00	13,00	S 188/203x13	
190,00	210,00	14,50	S 190/210x14,5	
190,00	210,00	15,00		SG 190/210x15
196,85	228,60	25,80	S 196,85/228,6x25,8	
198,00	208,00	12,00	S 198/208x12	
200,00	220,00	14,50		SG 200/220x14,5
200,00	220,00	16,00	S 200/220x16	
200,00	230,00	19,50	S 200/230x19,5	
210,00	240,00	22,50	S 210/240x22,5	
214,00	229,00	13,00	S 214/229x13	
220,00	245,00	15,50		SG 220/245x15,5
220,00	250,00	20,50	S 220/250x20,5	
225,00	255,00	22,50	S 225/255x22,5	
230,00	260,00	19,50	S 230/260x19,5	
238,00	258,00	15,50	S 238/258x15,5	
238,00	268,00	21,00	S 238/268x21	
250,00	285,00	16,50	S 250/285x16,5	
250,00	290,00	25,50	S 250/290x25,5	
260,00	290,00	20,00	S 260/290x20	
280,00	320,00	22,50	S 280/320x22,5	
290,00	310,00	15,00	S 290/310x15	
290,00	320,00	20,50	S 290/320x20,5	
310,00	330,00	16,50	S 310/330x16,5	
320,00	360,00	25,50	S 320/360x25,5	
340,00	380,00	25,50		SG 340/380x25,5
350,00	385,00	25,50	S 350/385x25,5	
360,00	400,00	33,80	S 360/400x33,8	
381,00	419,10	38,80	S 381/419,1x38,8	
400,00	425,00	19,00	S 400/425x19	
535,00	580,00	40,00	S 535/580x40	
558,80	609,60	45,50	S 558,8/609,6x45,5	

These sizes also available in FPM. Futher sizes/measurements and imperial sizes available on request.

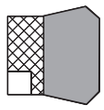

Example for ordering Rod Seal:

SG 32 / 42 x 8.5N

- Type
- Rod diameter d
- Groove diameter D
- Groove width
- Material

Material Key:

NBR Standard
FPM

WARNING: Limits of application stated herein are standard values. They could be individually transgressed with due consideration to respective service conditions. In the event of a large duty cycle, pulsating operation and other complex operational conditions, simultaneous transgression of these values is not recommended. Due to a large variety of service conditions that may arise in course of actual use, the company does not take responsibility of or guarantee the functional accuracy of the individual components. Rights for changes are reserved.

Rod Seal
TGO

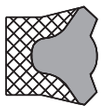

Fabric reinforced NBR rod seals from the TGO series have a very good anti-stick-slip tendency due to their special profile.

Special Features:

- Good dynamic and static sealing
- Long life due to high abrasion resistance
- Optimal service life and sealing due to special profile of sealing element
- Easy snap-on assembly possible in closed grooves
- Small mounting space
- All sizes available in quality FPM material

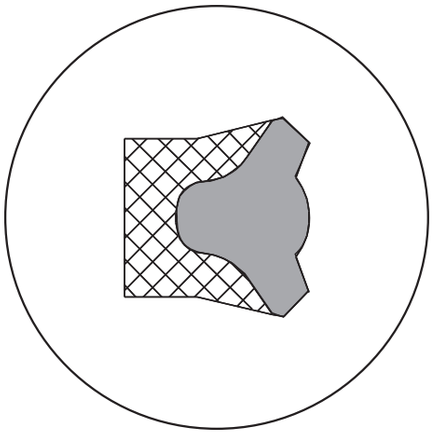

Material	:NBR fibre reinforced
Operating pressure	:up to 25 MPa (250 bar)
Velocity	:reciprocating to 0.5 m/s
Temperature	:-30 to +110 °C

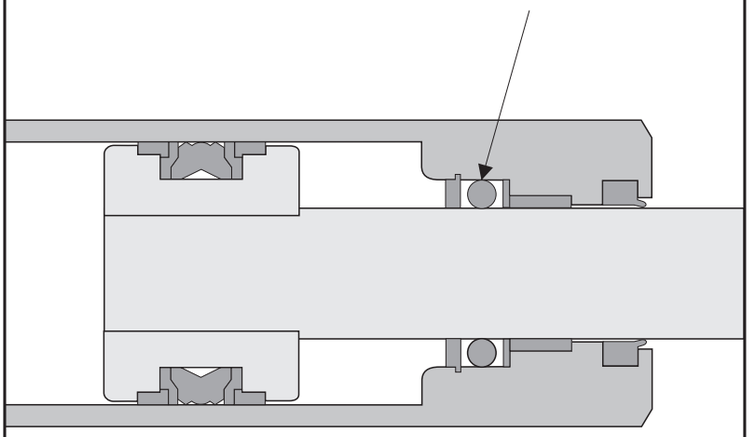

Rod Seal
TGO

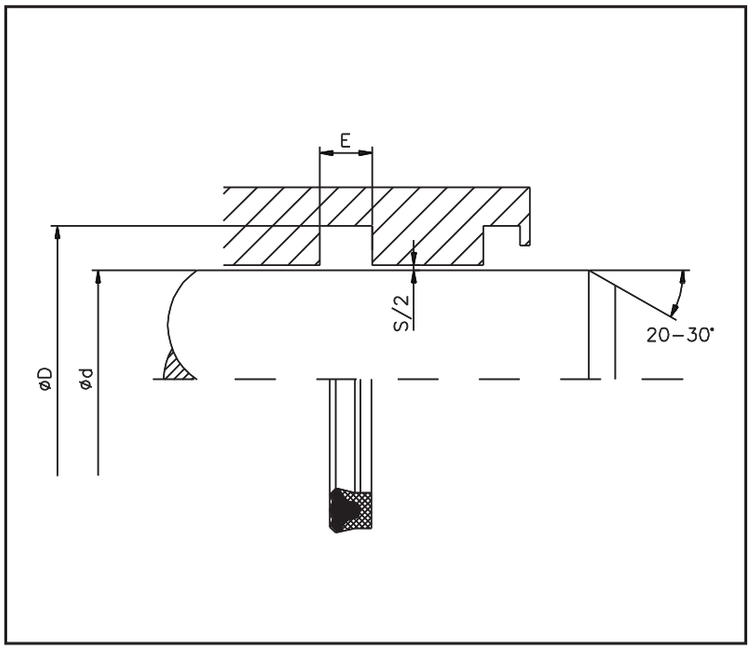

Limitations on Use

Operating pressure	: up to 25 MPa (250 bar)
Velocity	: reciprocating to 0.5 m/s
Temperature	: -30 to +110 °C

Media for Use

Mineral oil based hydraulic oils, flame resistant pressure media and emulsions (HFA, HFB, HFC), non-polluting pressure fluids (Bio Oils).

Surface Finish

Surfaces	Rz	Ra
Rod Diameter d	2,0 µm	0,3 µm
Groove Diameter D	4,0 µm	0,8 µm
Groove flanks	8,0 µm	1,8 µm

Diameter Clearance

max. Diameter Clearancel S [mm]	Max. Pressure [mm]
0,40	100
0,30	150
0,20	250

d f8/h9	D H10	E +0,2	Part N°
5,00	12,00	6,40	TGO 5/12x6,4
6,00	13,00	6,40	TGO 6/13x6,4
8,00	15,00	6,40	TGO 8/15x6,4
10,00	17,00	6,40	TGO 10/17x6,4
12,00	19,00	6,40	TGO 12/19x6,4
14,00	22,00	6,40	TGO 14/22x6,4
15,00	23,00	6,40	TGO 15/23x6,4
16,00	24,00	6,40	TGO 16/24x6,4
18,00	26,00	6,40	TGO 18/26x6,4
20,00	28,00	6,40	TGO 20/28x6,4
22,00	30,00	6,40	TGO 22/30x6,4
25,00	33,00	6,40	TGO 25/33x6,4
28,00	36,00	6,40	TGO 28/36x6,4
30,00	38,00	6,40	TGO 30/38x6,4
32,00	40,00	6,40	TGO 32/40x6,4
35,00	43,00	6,40	TGO 35/43x6,4
36,00	44,00	6,40	TGO 36/44x6,4
40,00	48,00	6,40	TGO 40/48x6,4
42,00	50,00	6,40	TGO 42/50x6,4
45,00	55,00	8,00	TGO 45/55x8

d f8/h9	D H10	E +0,2	Part N°
50,00	60,00	8,00	TGO 50/60x8
55,00	65,00	8,00	TGO 55/65x8
56,00	66,00	8,00	TGO 56/66x8
60,00	70,00	8,00	TGO 60/70x8
63,00	75,00	9,60	TGO 63/75x9,6
65,00	77,00	9,60	TGO 65/77x9,6
70,00	82,00	9,60	TGO 70/82x9,6
75,00	87,00	9,60	TGO 75/87x9,6
80,00	92,00	9,60	TGO 80/92x9,6
85,00	97,00	9,60	TGO 85/97x9,6
90,00	102,00	9,60	TGO 90/102x6,6
100,00	115,00	12,00	TGO 100/115x12
110,00	125,00	12,00	TGO 110/125x12
115,00	130,00	12,00	TGO 115/130x12
125,00	140,00	12,00	TGO 125/140x12
140,00	160,00	16,00	TGO 140/160x16
150,00	170,00	16,00	TGO 150/170x16
160,00	180,00	16,00	TGO 160/180x16
180,00	200,00	16,00	TGO 180/200x16
200,00	220,00	16,00	TGO 200/220x16

These sizes also available in FPM. Futher sizes/measurements and imperial sizes available on request.

Example for ordering Rod Seal:

TGO 36 / 44 x 6,4N

- Type
- Rod diameter d
- Groove diameter D
- Groove width
- Material

Material Key:

NBR Standard
FPM

WARNING: Limits of application stated herein are standard values. They could be individually transgressed with due consideration to respective service conditions. In the event of a large duty cycle, pulsating operation and other complex operational conditions, simultaneous transgression of these values is not recommended. Due to a large variety of service conditions that may arise in course of actual use, the company does not take responsibility of or guarantee the functional accuracy of the individual components. Rights for changes are reserved.

Rod Seal
AG

This type of rod seals as per AG is the most proven in the most demanding applications such as mining or civil engineering machinery, and is practically a guarantee of operational safety in the most demanding conditions. AG is the modern alternative to gland-seal sets.

Special Features:

- Three part composition designed for use in undivided assembly space interlockable 60 mm onwards
- Multi-lipped sealing faces on static and dynamic sides
- Oil film breaker on dynamic side
- Modified anti-wear special NBR mixture
- Special radial pre-stressing of sealing edges is also suitable at lower pressures
- Very good sealing effect in case of axial or radial vibrations and frequent pressure variation
- Lowest stick-slip behaviour even at the highest of pressures
- The entire seal is also available as "splits" to enable snapping around the rods.

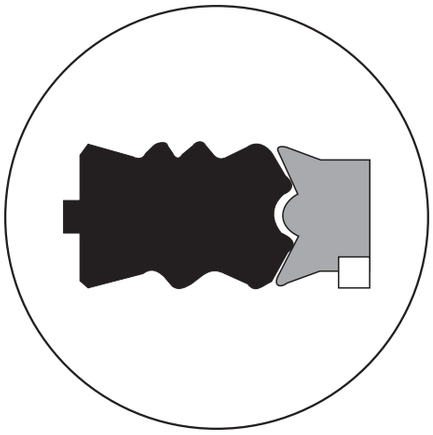

Material	:	modified NBR
Operating pressure	:	up to 70 MPa (700 bar)
Velocity	:	reciprocating to 0.5 m/s
Temperature	:	-30 to +110 °C

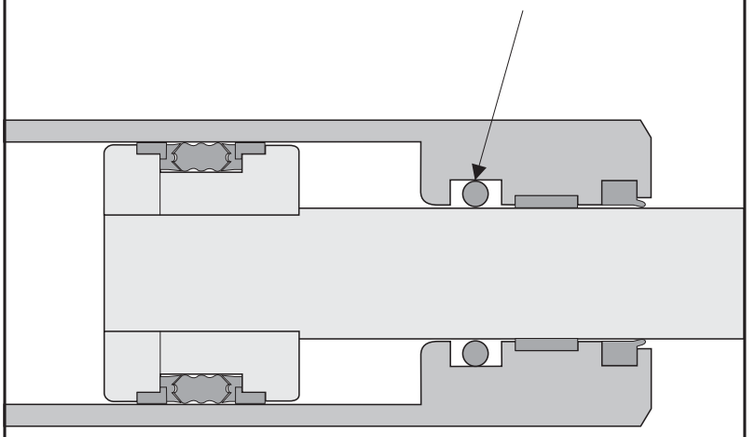

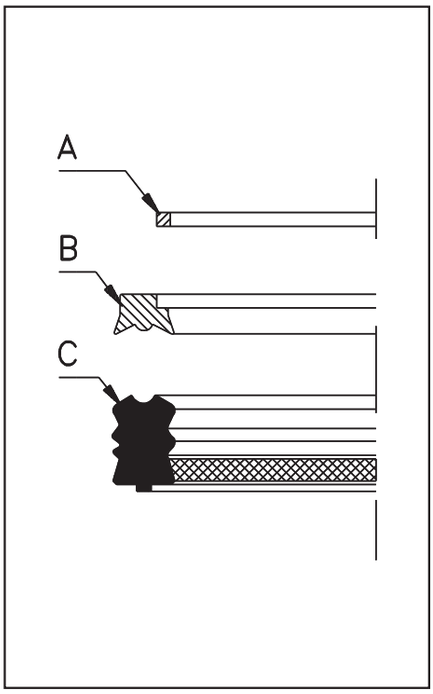

Back-up Ring (Part A)

Material: glass filled POM

This anti extrusion ring made of glass filled Polyacetal prevents extrusion of the sealing element in the event that pressure surges occur.

Support Ring (Part B)

Material: Polyester Elastomer

This support ring serves to absorb forces against the NBR sealing ring. It help to perform uniform pressure distribution on the support ring and works against extrusion of the NBR sealing ring.

Elastomer Sealing Component (Part C)

Material: modified NBR approx. 80° Shore A

This sturdy sealing element is made from high grade anti wear NBR and excels due to low compression strain as well as high tensile strength. Optimal molecular structure is achieved through the special manufacturing process for the sealing element.
The geometrical part is made of the sealing faces reduces the so called "stickslip effect" of the seal against the cylinder rod surface. The assembly is easy (from d=60 mm and up)

At high shear forces, hard fabric guide rings must be provided for safety. These can be fabricated in almost all sizes.

Rod Seal
AG

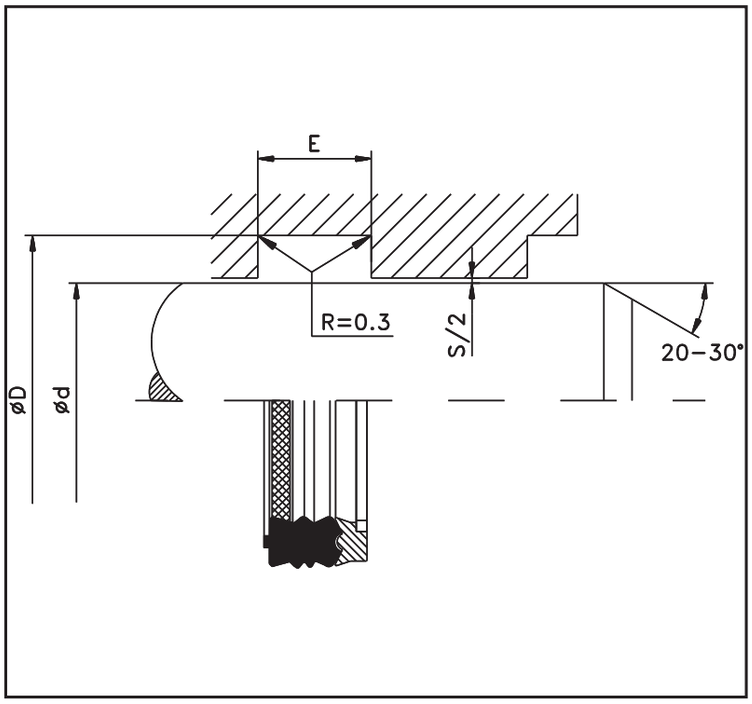

Limitations on Use

Operating pressure	:	up to 70 MPa (700 bar)
Velocity	:	reciprocating to 0.5 m/s
Temperature	:	-30 to +110 °C

Media for Use

Mineral oil based hydraulic oils, flame resistant pressure media and emulsions (HFA, HFB, HFC), non-polluting pressure fluids (Bio Oils).

Surface Finish

Surfaces	Rz	Ra
Rod Diameter d	2,0 µm	0,3 µm
Groove Diameter D	4,0 µm	0,8 µm
Groove flanks	8,0 µm	1,8 µm

Diameter Clearance

Max. Diameter Clearance S [mm]	Max. Pressure [bar]
0,30	250
0,25	400
0,20	500
0,10	700

d f8/h9	D H10	E +0,2	Part N°
15,00	27,00	20,00	AG 15/27x20
18,00	30,00	22,50	AG 18/30x22,5
20,00	33,00	20,00	AG 20/33x20
22,00	35,00	20,00	AG 22/35x20
25,00	37,00	22,50	AG 25/37x22,5
25,00	38,00	20,00	AG 25/38x20
28,00	41,00	20,00	AG 28/41x20
30,00	43,00	20,00	AG 30/43x20
32,00	47,00	22,50	AG 32/47x22,5
35,00	45,00	25,50	AG 35/45x25,5
35,00	47,00	22,50	AG 35/47x22,5
35,00	50,00	22,50	AG 35/50x22,5
36,00	51,00	22,50	AG 36/51x22,5
40,00	50,00	17,50	AG 40/50x17,5
40,00	52,00	22,50	AG 40/52x22,5
40,00	55,00	22,60	AG 40/55x22,6
40,00	60,00	30,00	AG 40/60x30
45,00	60,00	22,50	AG 45/60x22,5
45,00	65,00	28,00	AG 45/65x28
50,00	63,00	20,00	AG 50/63x20
50,00	65,00	22,50	AG 50/65x22,5
50,00	65,00	24,50	AG 50/65x24,5
50,00	70,00	30,00	AG 50/70x30
50,00	70,00	31,90	AG 50/70x31,9
55,00	70,00	22,50	AG 55/70x22,5
55,00	70,00	25,00	AG 55/70x25
55,00	75,00	30,00	AG 55/75x30
55,00	75,00	32,00	AG 55/75x32
56,00	71,00	25,00	AG 56/71x25
60,00	75,00	22,50	AG 6075x22,5
60,00	75,00	25,00	AG 60/75x25
60,00	77,00	27,00	AG 60/77x27

d f8/h9	D H10	E +0,2	Part N°
60,00	80,00	32,00	AG 60/80x32
60,00	80,00	34,90	AG 60/80x34,9
63,00	78,00	22,50	AG 63/78x22,5
63,00	83,00	27,00	AG 63/83x27
63,00	83,00	29,00	AG 63/83x29
63,00	83,00	30,00	AG 63/83x30
65,00	85,00	29,00	AG 65/85x29
70,00	85,00	22,50	AG 70/85x22,5
70,00	85,00	25,00	AG 70/85x25
70,00	90,00	30,00	AG 70/90x30
70,00	90,00	31,90	AG 70/90x31,9
75,00	95,00	28,00	AG 75/95x28
75,00	95,00	30,00	AG 75/95x30
76,50	96,50	32,50	AG 76,5/96,5x32,5
80,00	95,00	22,50	AG 80/95x22,5
80,00	100,00	30,00	AG 80/100x30
85,00	100,00	22,50	AG 85/100x22,5
85,00	105,00	30,00	AG 85/105x30
90,00	105,00	22,50	AG 90/105x22,5
90,00	105,00	25,00	AG 90/105x25
90,00	105,00	33,50	AG 90/105x33,5
90,00	110,00	30,00	AG 90/110x30
90,00	110,00	32,50	AG 90/110x32,5
95,00	110,00	22,50	AG 950-01-100
95,00	115,00	28,00	AG 95/115x28
100,00	114,30	24,20	AG 100/114,3x24,2
100,00	120,00	30,00	AG 100/120x30
105,00	118,00	25,00	AG 105/118x25
105,00	120,00	34,00	AG 105/120x34
105,00	125,00	30,00	AG 105/125x30
110,00	125,00	22,50	AG 110/125x22,5
110,00	130,00	32,50	AG 110/130x32,5

Rod Seal
AG

d f8/h9	D H10	E +0,2	Part N°
115,00	130,00	22,50	AG 115/130x22,5
115,00	130,00	30,00	AG 115/130x30
118,00	133,00	22,50	AG 118/133x22,5
120,00	135,00	22,50	AG 120/135x22,5
120,00	140,00	30,00	AG 120/140x30
125,00	140,00	22,50	AG 125/140x22,5
125,00	145,00	29,60	AG 125/145x29,6
127,00	142,00	22,50	AG 127/142x22,5
130,00	150,00	28,00	AG 130/150x28
132,00	144,00	20,00	AG 132/144x20
135,00	150,00	22,50	AG 135/150x22,5
135,00	155,00	28,00	AG 135/155x28
140,00	155,00	22,50	AG 140/155x22,5
140,00	160,00	22,50	AG 140160x22,5
140,00	160,00	28,00	AG 140/160x28
140,00	160,00	30,00	AG 140/160x30
145,00	165,00	22,50	AG 145/165x22,5
150,00	165,00	22,50	AG 150/165x22,5
150,00	170,00	28,00	AG 150/170x28
152,00	167,00	22,50	AG 152/167x22,5
155,00	175,00	22,50	AG 155/175x22,5
155,00	175,00	28,00	AG 155/175x28
158,50	180,00	28,00	AG 158,5/180x28
160,00	180,00	28,00	AG 160/180x28
160,00	180,00	30,00	AG 160/180x30
165,00	185,00	30,00	AG 165/185x30
170,00	185,00	22,50	AG 170/185x22,5
170,00	195,00	35,00	AG 170/195x35
175,00	195,00	22,50	AG 175/195x22,5
175,00	195,00	30,00	AG 175/195x30
175,00	200,00	35,00	AG 175/200x35
177,00	192,00	22,50	AG 177/192x22,5
180,00	195,00	22,50	AG 180/195x22,5

d f8/h9	D H10	E +0,2	Part N°
180,00	205,00	35,00	AG 180/205x35
185,00	200,00	22,50	AG 185/200x22,5
185,00	210,00	35,00	AG 185/210x35
187,00	202,00	22,50	AG 187/202x22,5
190,00	215,00	35,00	AG 190/215x35
192,00	210,00	22,50	AG 192/210x22,5
195,00	210,00	22,50	AG 195/210x22,5
200,00	215,00	22,50	AG 200/215x22,5
200,00	225,00	35,00	AG 200/225x35
207,00	225,00	22,50	AG 207/225x22,5
210,00	230,00	22,50	AG 210/230x22,5
212,00	230,00	22,50	AG 212/230x22,5
220,00	240,00	22,50	AG 220/240x22,5
220,00	245,00	35,00	AG 220/245x35
225,00	240,00	22,50	AG 225/240x22,5
225,00	250,00	35,00	AG 225/250x35
227,00	242,00	22,50	AG 227/242x22,5
230,00	250,00	22,50	AG 230/250x22,5
230,00	255,00	35,00	AG 230/255x35
235,00	255,00	22,50	AG 235/255x22,5
240,00	260,00	28,00	AG 240/260x28
240,00	265,00	35,00	AG 240/265x35
250,00	275,00	35,00	AG 250/275x35
260,00	280,00	22,50	AG 260/280x22,5
265,00	290,00	35,00	AG 265/290x35
275,00	300,00	35,00	AG 275/300x35
280,00	305,00	35,00	AG 280/305x35
283,00	303,00	22,50	AG 283/303x22,5
288,00	308,00	22,50	AG 288/308x22,5
300,00	325,00	35,00	AG 300/325x35
335,00	360,00	35,00	AG 335/360x35

These sizes also available in FPM.
Futher sizes/measurements and imperial sizes available on request.

Example for ordering Rod Seal:

AG 50 / 63 x 20

Type
Rod Diameter d
Groove diameter D
Groove width

Material Key:

Sealing Part
NBR Standard
FPM

WARNING: Limits of application stated herein are standard values. They could be individually transgressed with due consideration to respective service conditions. In the event of a large duty cycle, pulsating operation and other complex operational conditions, simultaneous transgression of these values is not recommended. Due to a large variety of service conditions that may arise in course of actual use, the company does not take responsibility of or guarantee the functional accuracy of the individual components. Rights for changes are reserved.

Rod Seal
CH5/CH7

Hydraulic rod seals are called V-seals are often used in heavy duty applications. Dirty areas for pistons/rods and high temperatures are usually not a problem for Vring-system. Applications include light duty hydraulics where attack of dirt is involved, also heavy hydraulics such as presses and rollers.

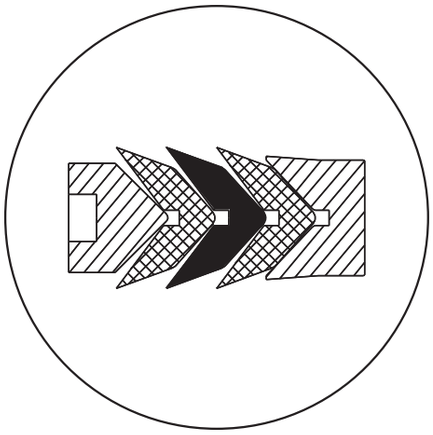

Special Features:

- Five parts composition comprising of one pressure ring, two rubber fabric V-rings, one NBR V-ring and one bottom V-ring.
- Seven part composition comprising of one pressure ring, three fabric V-rings, two NBR V-rings and one bottom V-ring.
- Highly wear resistant cotton used in V-rings
- Good results even with rod vibrations or stopping
- Can be safely used for larger tolerances
- Three or five sealing lips
- Sealing sets also available in FPM
- Many sizes interchangeable with compact seal type PSE
- Supply possible up to d = 950 mm
- Gland sealing sets also delivered in total fabric design

Material	:	acrylic nitril rubber (NBR) fibre reinforced
Operating pressure	:	CH5 up to 40 MPa (400 bar)
		CH7 up to 40 MPa (400 bar)
Velocity	:	reciprocating to 0.5 m/s
Temperature	:	-30 to +110 °C

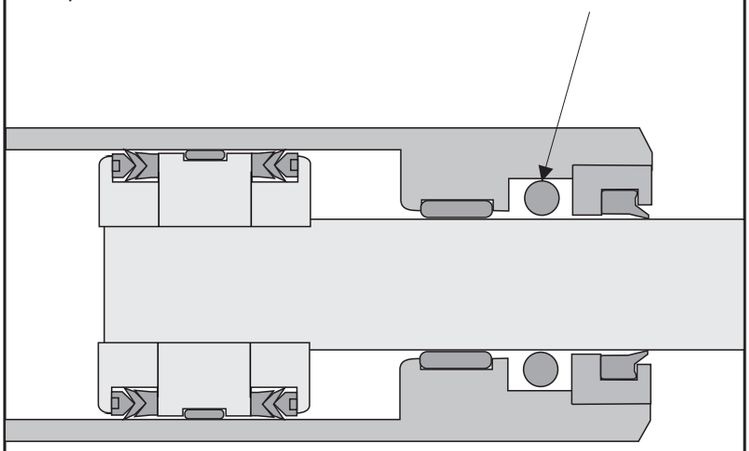

Rod Seal
CH5/CH7

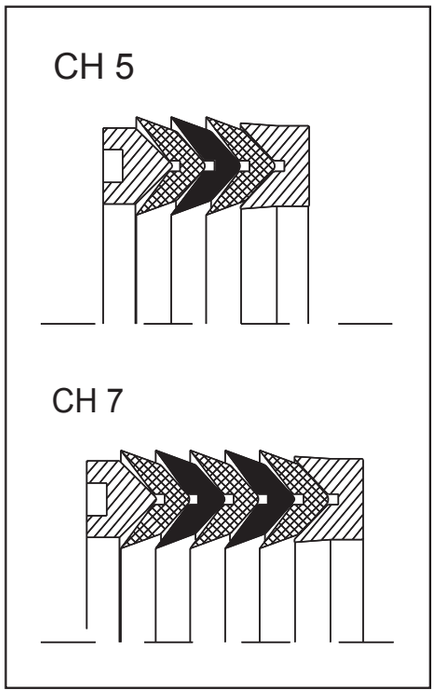

Detailed Information

The left hand drawing shows the arrangement of various types of V-rings, i.e. bottom and pressure ring for the five part and seven part V-rings type.
It is also possible to increase the number of individual V-rings in the fabric design or NBR design if needed.
It must be noted, however, that, in contrast to the the so-called compact hydraulic rod seal, friction between individual V-rings increases significantly under high pressure and will also give a much higher friction.
This kind of hydraulic rod seal also provide good results for water hydraulics.
All these sealing designs and sizes are also available in FPM.

Rod Seal
CH5/CH7

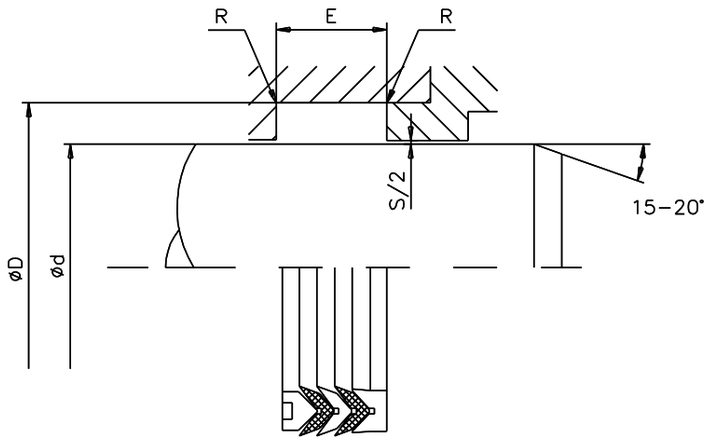

Rmax = 0,4 for Ø d < 50 mm
Rmax = 0,8 for Ø d > 50 mm

Limitations on Use

Operating pressure	:	HS 215 up to 40 MPa (400 bar)
Velocity		HS 217 up to 50 MPa (500 bar)
Temperature	:	reciprocating to 0.5 m/s
	:	-30 to +110 °C (material NBR)
		- 10 to +150 °C (material FPM)

Media for Use

Mineral oil based hydraulic oils, flame resistant pressure media (HFA, HFB, HFC), non-polluting pressure fluids (Bio Oils).

Surface Finish

Surfaces	Rz	Ra
Rod diameter d	1,2 µm	0,3 µm
Groove diameter D	6,3 µm	1,8 µm
Groove flanks	10,0 µm	3,2 µm

Diameter Clearance

Max. Diameter Clearance S [mm]	Max. Pressure [bar] HS 215	HS 217
0,40	150	200
0,30	225	300
0,20	300	400
0,15	400	500

Construction CH5

d f8/h9	D H10	E +0,3	Part N°
10,00	20,00	11,00	CH5 10/20x11
12,00	25,00	14,35	CH5 12/25x14,35
16,00	29,00	14,35	CH5 16/29x14,35
18,00	31,00	14,32	CH5 18/31x14,32
20,00	30,00	21,50	CH5 20/30x21,5
20,00	31,50	17,50	CH5 20/31,5x17,5
20,00	33,00	14,35	CH5 20/33x14,35
22,00	32,00	18,15	CH5 22/32x18,35
25,00	35,00	17,30	CH5 25/35x17,3
25,00	40,00	19,85	CH5 25/40x19,85
25,00	42,00	25,40	CH5 25/42x25,4
26,00	45,00	29,40	CH5 26/45x29,4
28,00	40,00	17,00	CH5 28/40x17
28,00	44,00	17,65	CH5 28/44x17,65
30,00	40,00	21,80	CH5 30/40x21,8
30,00	42,00	20,00	CH5 30/42x20
30,00	45,00	22,20	CH5 30/45x22,2
30,00	50,00	29,37	CH5 30/50x29,37
32,00	42,00	17,30	CH5 32/42x17,30
35,00	45,00	21,78	CH5 35/45x21,78
35,00	50,00	22,50	CH5 35/50x22,5
36,00	52,00	17,60	CH5 36/52x17,6
38,00	55,00	28,00	CH5 38/55x28
40,00	50,00	17,30	CH5 40/50x17,3
40,00	55,00	22,60	CH5 40/55x22,6
40,00	55,00	26,20	CH5 40/55x26,2
40,00	56,00	17,63	CH5 40/56x17,63
40,00	60,00	30,00	CH5 40/60x30
40,00	65,00	35,75	CH5 40/65x35,75
45,00	55,00	17,50	CH5 45/55x17,5

Construction CH7

d f8/h9	D H10	E +0,3	Part N°
8,00	18,00	18,50	CH7 8/18x18,5
10,00	20,00	18,50	CH7 10/20x18,5
12,00	22,00	18,50	CH7 12/22x18,5
14,00	24,00	18,50	CH7 14/24x18,5
14,00	25,00	18,50	CH7 14/25x18,5
16,00	26,00	18,50	CH7 16/26x18,5
18,00	28,00	18,50	Ch7 18/28x18,5
20,00	30,00	18,50	CH7 20/30x18,5
20,00	32,00	22,50	CH7 20/32x22,5
22,00	32,00	18,50	CH7 22/32x18,5
22,00	34,00	22,50	CH7 22/34x22,5
25,00	37,00	22,50	CH7 25/37x22,5
25,00	40,00	22,50	CH7 25/40x22,5
28,00	40,00	22,50	CH7 28/40x22,5
28,00	43,00	22,50	CH7 28/43x22,5
30,00	42,00	22,50	CH7 30/42x22,5
30,00	45,00	22,50	CH7 30/45x22,5
32,00	44,00	22,50	CH7 32/44x22,5
32,00	47,00	22,50	CH7 32/47x22,5
35,00	47,00	22,50	CH7 35/47x22,5
36,00	48,00	22,50	CH7 36/48x22,5
36,00	51,00	22,50	CH7 36/51x22,5
40,00	52,00	22,50	CH7 40/52x22,5
40,00	55,00	22,50	CH7 40/55x22,5
42,00	54,00	22,50	CH7 42/54x22,5
42,00	57,00	22,50	CH7 42/57x22,5
45,00	60,00	22,50	CH7 45/60x22,5
45,00	65,00	27,50	CH7 45/65x27,5
50,00	65,00	22,50	CH7 50/65x22,5
50,00	70,00	30,00	CH7 50/70x30

Rod Seal
CH5/CH7

Construction CH5

d f8/h9	D H10	E +0,3	Part N°
45,00	60,00	22,20	CH5 45/60x22,2
45,00	65,00	28,00	CH5 45/65x28
48,00	60,00	25,00	CH5 48/60x25
48,00	62,00	22,22	CH5 48/62x22,22
50,00	65,00	24,60	CH5 50/65x24,6
50,00	70,00	21,95	CH5 50/70x21,95
50,00	70,00	30,00	CH5 50/70x30
51,00	69,00	28,00	CH5 51/69x28
55,00	67,00	25,00	CH5 55/67x25
55,00	70,00	26,50	CH5 55/70x26,5
55,00	75,00	30,00	CH5 55/75x30
55,00	75,00	38,50	CH5 55/75x38,5
60,00	75,00	19,00	CH5 60/75x19
60,00	76,00	29,00	CH5 60/76x29
60,00	77,00	27,00	CH5 60/77x27
60,00	80,00	32,15	CH5 60/80x32,15
63,00	83,00	32,00	CH5 63/83x32
63,50	80,00	28,00	CH5 63,5/80x28
64,00	80,00	25,80	CH5 64/80x25,8
65,00	77,00	21,00	CH5 65/77x21
65,00	85,00	29,00	CH5 65/85x29
70,00	85,00	28,00	CH5 70/85x28
70,00	90,00	22,00	CH5 70/90x22
70,00	90,00	30,00	CH5 70/90x30
75,00	90,00	22,50	CH5 75/90x22,5
75,00	95,00	30,00	CH5 75/95x30
75,00	100,00	37,50	CH5 75/100x37,5
80,00	95,00	17,50	CH5 80/95x17,5
80,00	100,00	30,00	CH5 80/100x30
90,00	105,00	31,75	CH5 90/105x31,75
90,00	110,00	25,00	CH5 90/110x25
90,00	110,00	26,90	CH5 90/110x26,9
90,00	115,00	27,41	CH5 90/115x27,41
95,00	110,00	24,00	CH5 95/110x24
100,00	115,00	25,30	CH5 100/115x25,3
100,00	120,00	28,00	CH5 100/120x28
100,00	125,00	27,40	CH5 100/125x27,4
100,00	125,00	36,90	CH5 100/125x36,9
104,00	130,00	37,00	CH5 104/130x37
105,00	120,00	25,00	CH5 105/120x25
105,00	125,00	29,76	CH5 105/125x29,76
110,00	130,00	30,00	CH5 110/130x30
110,00	132,00	36,50	CH5 110/132x36,5
114,00	130,00	25,80	CH5 114/130x25,8
115,00	140,00	37,12	CH5 115/140x37,12
120,00	140,00	30,00	CH5 120/140x30
120,00	150,00	44,00	CH5 120/150x44
125,00	145,00	29,60	CH5 125/145x29,6
125,00	150,00	27,40	CH5 125/150x27,4
130,00	150,00	29,76	CH5 130/150x29,76
130,00	160,00	41,50	CH5 130/160x41,5
135,00	155,00	30,55	CH5 135/155x30,55
140,00	160,00	28,50	CH5 140/160x28,5
140,00	165,00	41,95	CH5 140/165x41,95
140,00	170,00	32,97	CH5 140/170x32,97
145,00	170,00	38,10	CH5 145/170x38,1
150,00	170,00	30,55	CH5 150/170x30,55
150,00	180,00	40,00	CH5 150/180x40
157,00	182,00	30,25	CH5 157/182x30,25
160,00	190,00	33,00	CH5 160/190x33

Construction CH7

d f8/h9	D H10	E +0,3	Part N°
55,00	70,00	22,50	CH7 55/70x22,5
56,00	71,00	22,50	CH7 56/71x22,5
56,00	76,00	37,00	CH7 56/76x37
60,00	75,00	22,50	CH7 60/75x22,5
60,00	80,00	37,00	CH7 60/80x37
63,00	78,00	22,50	CH7 63/78x22,5
63,00	83,00	37,00	CH7 63/83x37
65,00	80,00	22,50	CH7 65/80x22,5
65,00	85,00	40,00	CH7 65/85x40
70,00	85,00	22,50	CH7 70/85x22,5
70,00	90,00	40,00	CH7 70/90x40
75,00	90,00	22,50	CH7 75/90x22,5
75,00	95,00	40,00	CH7 75/95x40
80,00	95,00	22,50	CH7 80/95x22,5
80,00	100,00	40,00	CH7 80/100x40
85,00	100,00	22,50	CH7 85/100x22,5
85,00	105,00	40,00	CH7 85/105x40
90,00	105,00	22,50	CH7 90/105x22,5
90,00	110,00	40,00	CH7 90/110x40
100,00	115,00	30,00	CH7 100/115x30
100,00	120,00	40,00	CH7 100/120x40
110,00	125,00	30,00	CH7 100/125x30
110,00	130,00	40,00	CH7 110/130x40
115,00	130,00	30,00	CH7 115/130x30
115,00	140,00	46,00	CH7 115/140x46
125,00	140,00	34,00	CH7 125/140x34
125,00	150,00	46,00	CH7 125/150x46
140,00	155,00	34,00	CH7 140/155x34
140,00	165,00	46,00	CH7 140/165x46
150,00	170,00	40,00	CH7 150/170x40
150,00	180,00	60,00	CH7 150/180x60
160,00	180,00	40,00	CH7 160/180x40
160,00	190,00	60,00	CH7 160/190x60
170,00	200,00	60,00	CH7 170/200x60
180,00	200,00	40,00	CH7 180/200x40
180,00	210,00	60,00	CH7 180/210x60
190,00	220,00	60,00	CH7 190/220x60
200,00	220,00	40,00	CH7 200/220x40
200,00	230,00	60,00	CH7 200/230x60
220,00	250,00	66,00	CH7 220/250x66
240,00	270,00	64,00	CH7 240/270x64

Construction CH5

d f8/h9	D H10	E +0,3	Part N°
170,00	195,00	37,50	CH5 170/195x37,5
175,00	200,00	42,00	CH5 175/200x42
180,00	210,00	33,00	CH5 180/210x33
200,00	220,00	30,00	CH5 200/220x30
200,00	230,00	32,97	CH5 200/230x32,97
205,00	225,00	19,50	CH5 205/225x19,5
210,00	240,00	42,10	CH5 210/240x42,1
220,00	250,00	52,00	CH5 220/250x52
224,00	254,00	32,97	CH5 224/254x32,97
240,00	270,00	45,00	CH5 240/270x45
250,00	280,00	33,00	CH5 250/280x33
280,00	315,00	38,45	CH5 280/315x38,45
290,00	320,00	50,80	CH5 290/320x50,8
300,00	320,00	32,00	CH5 300/320x32
310,00	330,00	30,00	CH5 310/330x30
315,00	350,00	38,45	CH5 315/350x38,45
320,00	360,00	54,00	CH5 320/360x54
320,00	365,00	55,00	CH5 320/365x55
340,00	380,00	60,00	CH5 340/380x60
350,00	390,00	60,00	CH5 350/390x60
360,00	400,00	60,00	CH5 360/400x60
369,00	400,00	45,00	CH5 369/400x45
400,00	440,00	54,00	CH5 400/440x54
463,00	500,00	55,00	CH5 463/500x55

These sizes also available in FPM.
Futher sizes/measurements and imperial sizes available on request.

Example for ordering Rod Seal:

CH5 50 / 65 x 24,6

Type
Rod diameter d
Groove diameter D
Groove width

Material Key:

NBR Standard
FPM

WARNING: Limits of application stated herein are standard values. They could be individually transgressed with due consideration to respective service conditions. In the event of a large duty cycle, pulsating operation and other complex operational conditions, simultaneous transgression of these values is not recommended. Due to a large variety of service conditions that may arise in course of actual use, the company does not take responsibility of or guarantee the functional accuracy of the individual components. Rights for changes are reserved.

Rod Seal
UN, RSA, SI, SI/L and SI/LA

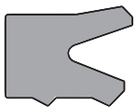

Hydraulic seals made by Polyurethane for piston/rod seals types such as UN to SI/LA and the associated types have been used for years in light and intermediate duty hydraulic applications because they provide very good sealing exchange and significantly longer life compared to NBR materials.

Special Features:

- Highly wear resistant modified Polyurethane mixture
- Quick and assured response event at lower temperature due to the special profile and design
- Simple to assembly in closed grooves
- Better extrusion resistance compared to NBR
- Larger extrusion gap is therefore possible
- Small mounting space
- Cost effective
- Extensive range of sizes are available

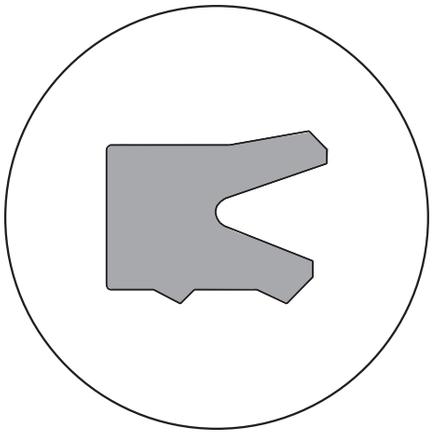

Material	:	Polyurethan	
Operational pressure	:	UN, SI and SI/L	up to 40 MPa (400 bar)
		SI/LA	up to 50 MPa (500 bar)
Velocity	:	reciprocating to	0,8 m/s
Temperature	:		-40 up to +110 °C

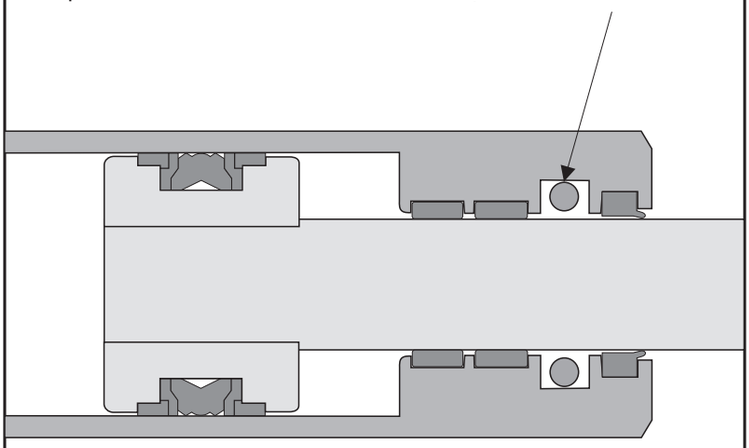

Rod Seal
UN, RSA, SI, SI/L and SI/LA

Detailled information

Polyurethane rod seals of the UN to SI/LA series exhibit faster response on account of the special groove to the pressure side.

UN

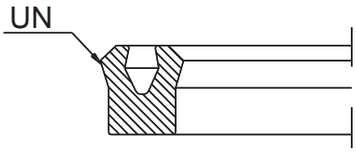

UN
This relates to the so-called standard type with symetric lip form and special groove depth. This profile can be used as piston as well as rod seal. Sealing lips are equally pre-stressed on inner and outer diameters. Many of the UN models can also be supplied in the RSA design.

RSA

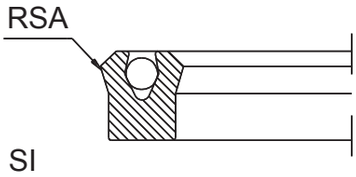

RSA
This type is pre-stressed through an integrated NBR O-ring. This is advantageous at static low pressures and low temperatures. It can be used as piston seal and also as rod seal.

SI

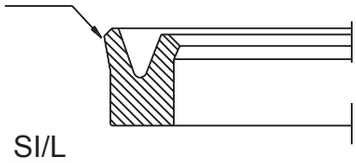

SI
Asymmetric sealing lips with reduction on the dynamic side significantly reduce friction. Pre- stressing of this seal is mainly done by increasing the outer diameter.

SI/L

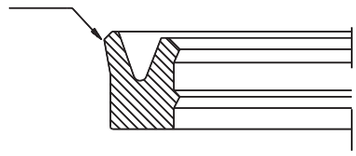

SI/L
The main difference when compared to all other types is the so-called SECONDARY LIP on the dynamic side. The advantages are:

- Reduced friction due to lubricant between the lips
- Significant stick slip improvement
- Temperature reduction at the dynamic sealing lip, thus gives longer life
- Fixation of rod seal at external diameter, so no tilting at high velocity is possible
- Low wear due to exact positioning within gland groove
- Exact stabilisation in housing at low temperature

Type SI/L mainly contains various sizes for telescopic cylinders

SI/LA

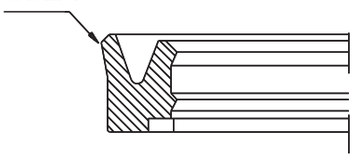

SI/LA
All advantages mentioned for SI/L are applicable to the variant type SI/LA. The special advantage is that bigger gaps and pressures can operate through the intergrated extrusion ring

All illustrated rod seals from UN to SI/LA offer special advantages to the user. Please enquire with the technical services as to which variant is the best for your application. We welcome your enquires with respect to bio oils.

Rod Seal
UN, RSA, SI, SI/L and SI/LA

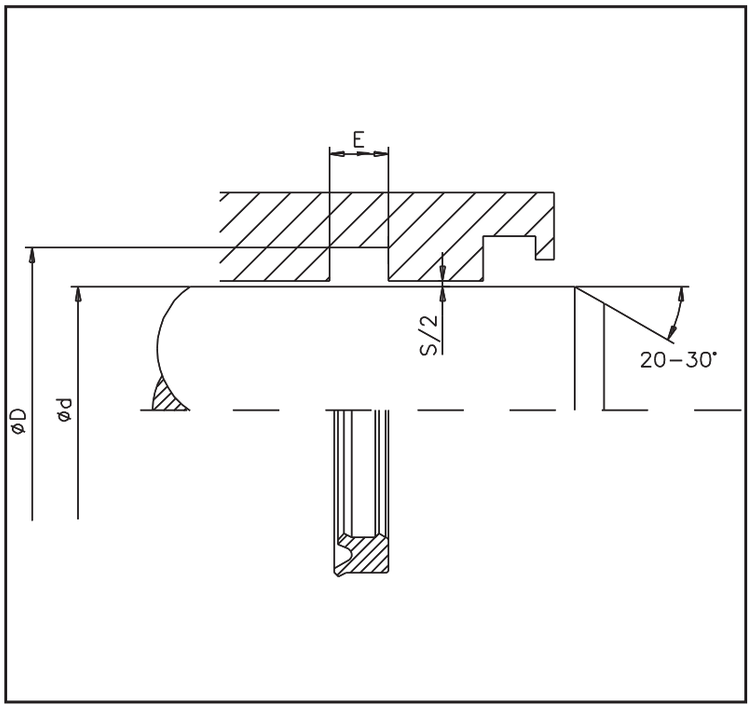

Limitations of Use

Operating pressure	:UN - SI/L up to 40 MPa (400 bar)
	SI/LA up to 50 MPa (500 bar)
Velocity	:reciprocating to 0.8 m/s
Temperature	:-40 bis +110 °C

Media for Use

Mineral oil based hydraulic oils. Bio Oils as well as flame resistant pressure fluids on request.

Surface Finish

Surfaces	Rz	Ra
Rod diameter d	2,0 µm	0,3 µm
Groove diameter D	6,3 µm	1,6 µm
Groove flanks	10,0 µm	3,2 µm

Diameter Clearance

Max. diameter clearance S [mm]	Max. pressure [bar] UN, SI, SI/L	SI/LA
0,80	100	200
0,60	150	250
0,40	200	350
0,20	400	500

d f8/h9	D H10	E +0,2	Part N° UN	Part N° SI	Part N° SI/L	Part N°. SI/LA
3,00	9,00	5,00	UN 3/9x5			
4,00	10,00	4,50	UN 4/10x4,5			
4,00	10,00	5,00	UN 4/10x5			
4,50	11,00	5,50	UN 4,5/11x5,5			
4,50	12,50	5,00	UN 4,5/12,5x5			
5,00	12,00	5,50	UN 5/12x5,5			
5,00	12,00	7,00	UN 5/12x7			
5,00	12,00	6,50	UN 5/12x6,5			
5,00	12,70	9,00	UN 5/12,79			
5,00	17,00	10,00	UN 5/17x10			
6,00	12,00	4,50	UN 6/12x4,5			
6,00	12,00	5,80		SI 6/12x5,8		
6,00	12,00	6,00	UN 6/12x6			
6,00	12,00	6,50	UN 6/12x6,5			
6,00	12,70	6,50	UN 6/12,7x6,5			
6,00	**14,00**	**6,30**		**SI 6/14x6,3**		
6,00	15,00	9,00	UN 6/15x9			
6,35	11,11	5,50	UN 6,35/11,11x5,5			
7,00	14,00	4,20	UN 7/14x4,2			
7,00	15,00	8,00	UN 7/15x8			
8,00	12,00	3,50	UN 8/12x3,5			
8,00	14,00	7,00	UN 8/14x7			
8,00	14,40	10,50		SI 8/14,4x10,5		
8,00	15,00	6,30	UN 8/15x6,3			
8,00	15,00	9,00	UN 8/15x9			
8,00	**16,00**	**6,30**	**UN 8/16x6,3**	**SI 8/16x6,3**		
8,00	18,00	9,00		SI 8/18x9		
8,00	18,00	10,00	UN 8/18x10			
8,00	22,00	9,00	UN 8/22x9			
9,00	15,00	9,00	UN 9/15x9			
9,00	19,00	7,00	UN 9/19x7			
10,00	16,00	6,50	UN 10/16x6,5			

Rod Seal
UN, RSA, SI, SI/L and SI/LA

d f8/h9	D H10	E +0,2	Part N° UN	Part N° SI	Part N° SI/L	Part N° SI/LA
10,00	18,00	6,00	UN 10/18x6			
10,00	**18,00**	**6,30**		**SI 10/18x6,3**		
10,00	18,00	7,00	UN 10/18x7			
10,00	18,00	9,00	UN 100-04-200			
10,00	**20,00**	**8,00**		**SI 10/20x8**		
10,00	20,00	9,00	UN 10/20x9	SI 10/20x9		
10,00	22,00	7,00	UN 10x22x7			
10,00	22,00	9,00	UN 10/22x9			
11,00	17,00	5,00	UN 11/17x5			
11,00	20,50	7,00	UN 11/20,5x7			
12,00	18,00	5,50	UN 1218x5,5			
12,00	18,00	7,00	UN 12/18x7			
12,00	20,00	6,40		SI 12/20x6,4		
12,00	20,00	8,00	UN 12/20x8			
12,00	20,00	9,00	UN 12/20x9			
12,00	22,00	6,00	UN 12/22x6			
12,00	**22,00**	**8,00**	**UN 12/22x8**	**SI 12/22x8**		
12,00	22,00	9,00	UN 12/22x9	SI 12/22X9		
12,00	24,00	9,00	UN 12/24x9			
12,00	24,00	10,00	UN 12/24x10			
12,00	25,00	9,00	UN 12/25x9			
12,00	25,00	11,00	UN 12/25x11			
14,00	20,00	5,30	UN 14/20x5,3			
14,00	22,00	4,50	UN 14/22x4,5			
14,00	**22,00**	**6,30**		**SI 14/22x6,3**		
14,00	22,00	7,00	UN 14/22x7			
14,00	22,00	9,00	UN 14/22x9			
14,00	22,00	12,00	UN 140-05-200			
14,00	**24,00**	**8,00**		**SI 14/24x8**	**SI/L 14/24x8**	
14,00	24,00	9,00	UN 14/24x9	SI 14/24x9		
15,00	23,00	6,30		SI 15/23x6,3		
15,00	25,00	11,00	UN 1515/25x11			
15,00	25,00	9,00	UN 15/25x9	SI 15/25x9		
15,00	26,00	8,00			SI/L 15/26x8	
15,00	27,00	7,00	UN 15/27x7			
15,00	28,00	11,00	UN 15/28x11			
15,40	25,50	7,40			SI/L 15,4/25,5x7,4	
16,00	20,60	3,60		SI 16/20,6x3,6		
16,00	22,00	4,50	UN 16/22x4,5			
16,00	22,00	5,50	UN 16/22x5,5			
16,00	24,00	6,00	UN 16/24x6			
16,00	24,00	6,30		SI 16/24x6,3		
16,00	24,00	7,00		SI 16/24x7		
16,00	24,00	10,00	UN 16/24x10			
16,00	26,00	6,00	UN 16/26x6			
16,00	**26,00**	**8,00**		**SI 16/26x8**		
16,00	26,00	9,00	UN 16/26x9	SI 16/26x9		
16,00	26,00	10,00		SI 16/26x10		
16,00	26,00	11,00	UN 16/26x11			
16,00	28,00	7,00	UN 16/28x7			
16,00	32,00	9,00	UN 16/32x9			
17,00	25,00	11,00	UN 17/25x11			
18,00	24,00	5,20		SI 18/24x5,2		
18,00	25,00	5,50	UN 18/25x5,5			
18,00	**26,00**	**6,30**		**SI 18/26x6,3**		
18,00	26,00	7,00			SI/L 18/26x7	
18,00	26,00	7,50	UN 18/26x7,5			
18,00	26,00	9,00	UN 18/26x9	SI 18/26x9	SI/L 18/26x9	
18,00	26,00	9,50	UN 18/26x9,5			
18,00	**28,00**	**8,00**		**SI 18/28x8**		
18,00	28,00	9,00	UN 18/28x9	SI 18/28x9		

d f8/h9	D H10	E +0,2	Part N° UN	Part N° SI	Part N° SI/L	Part N° SI/LA
18,00	30,00	9,00	UN 18/30x9			
19,00	25,00	7,00	UN 19/25x7			
19,50	27,50	9,00			SI/L 19,5/27,5x9	
20,00	26,00	5,50		SI 20/26x5		
20,00	**28,00**	**5,00**	**UN 20/28x5**			
20,00	**28,00**	**6,30**		**SI 20/28x6,3**		
20,00	28,00	7,00		SI 20/28x7		
20,00	28,00	8,00		SI 20/28x8		
20,00	28,00	9,00	UN 20/28x9			
20,00	29,00	5,50	UN 2029x5,5			
20,00	**30,00**	**8,00**		**SI 20/30x8**		
20,00	30,00	9,00	UN 20/30x9	SI 20/30x9		
20,00	30,00	11,00	UN 20/30x11	SI 20/30x11		
20,00	32,00	8,50	UN 20/32x8,5			
20,00	35,00	11,00		SI 20/35x11		
20,00	35,00	13,00	UN 20/35x13			
20,00	39,00	11,00	UN 20/39x11			
20,00	40,00	11,00	UN 20/40x11			
20,00	40,00	13,00	UN 20/40x13			
22,00	28,00	9,00	UN 22/28x9			
22,00	**30,00**	**6,30**		**SI 22/30x6,3**		
22,00	30,00	7,00	UN 22/30x7		SI/L 22/30x7	
22,00	30,00	11,00	UN 22/30x11			
22,00	**32,00**	**8,00**		**SI 22/32x8**		
22,00	32,00	9,00	UN 22/32x9	SI 22/32x9		
22,00	32,00	11,00	UN 22/32x11	SI 22/32x11		
22,00	35,00	11,00	UN 22/35x11			
22,00	40,00	11,00	UN 22/40x11			
23,00	30,00	7,50	UN 23/30x7,5			
24,00	32,00	8,00	UN 24/32x8			
24,00	34,00	8,00		SI 24/34x8		
24,00	34,00	9,50		SI 24/34x9,5		
24,00	40,00	9,00	UN 24/40x9			
25,00	**33,00**	**6,30**		**SI 25/33x6,3**		
25,00	33,00	7,00		SI 25/33x7	SI/L 25/33x7	
25,00	33,00	7,50			SI/L 25/33x7,5	
25,00	33,00	8,00		SI 25/33x8	SI/L 25/33x8	
25,00	33,00	11,00		SI 25/33x11		
25,00	35,00	5,50	UN 25/35x5,5			
25,00	**35,00**	**8,00**		**SI 25/35x8**		
25,00	35,00	9,00	UN 25/35x9	SI 25/35x9		
25,00	35,00	11,00	UN 25/35x11	SI 25/35x11		
25,00	38,00	10,00		SI 25/38x10		
25,00	38,00	11,00	UN 25x/38x11			
25,00	40,00	11,00	UN 25/40x11	SI 25/40x11		
28,00	35,00	5,50	UN 28/35x5,5			
28,00	36,00	6,30		SI 28/36x6,3		
28,00	36,00	7,50	UN 28/36x7,5			
28,00	**38,00**	**8,00**		**SI 28/38x8**		
28,00	38,00	8,50			SI/L 28/38x8,5	
28,00	38,00	9,00	UN 28/38x9	SI 28/38x9		
28,00	38,00	11,00		SI 28/38x11		
28,00	40,00	9,50		SI 28/40x9,5		
28,00	40,00	11,00	UN 28/40x11			
28,00	43,00	12,50		SI 28/43x12,5		
29,00	35,00	6,30		SI 29/35x6,3		
30,00	37,00	7,00	UN 30/37x7			
30,00	38,00	6,30		SI 30/38x6,3		
30,00	38,00	6,50	UN 30/38x6,5			
30,00	38,00	9,00		SI 30/38x9		
30,00	40,00	5,50	UN 30/40x5,5			

d f8/h9	D H10	E +0,2	Part N° UN	Part N° SI	Part N° SI/L	Part N° SI/LA
30,00	40,00	6,30		SI 30/40x6,3		
30,00	40,00	7,50			SI/L 3/40x7,5	
30,00	40,00	8,00		SI 30/40x8	SI/L 30/40x8	
30,00	40,00	10,50		SI 30/40x10,5		
30,00	40,00	11,00	UN 30/40x11	SI 30/40x11		
30,00	42,00	10,00	UN 30/42x10			
30,00	42,00	11,00	UN 30/42x11			
30,00	43,00	10,00		SI 30/43x10		
30,00	45,00	9,00		SI 30/45x9		
30,00	45,00	11,00	UN 30/45x11	SI 30/45x11		
30,00	50,00	11,00	UN 30/50x11			
30,00	50,00	13,00	UN 30/50x13			
32,00	40,00	6,00	UN 32/40x6			
32,00	40,00	6,30		SI 32/40x6,3		
32,00	40,00	7,70			SI/L 32/40x7,7	
32,00	40,00	9,00	UN 32/40x9	SI 32/40x9		
32,00	41,50	8,90			SI/L 32/41,5x8,9	
32,00	**42,00**	**8,00**		**SI 32/42x8**		
32,00	42,00	11,00	UN 32/42x11	SI 32/42x11		
32,00	42,53	9,00		SI 32/42,53x9		
32,00	45,00	10,50		SI 32/45x10,5		
32,00	45,00	11,00	UN 32/45x11			
32,00	47,00	11,00		SI 32/47x11		
32,00	50,00	13,00	UN 32/50x13			
33,00	43,00	11,00		SI 33/43x11		
34,00	45,00	8,00	UN 34/45x8			
34,00	45,00	10,00	UN 34/45x10			
34,00	50,00	15,00	UN 34/50x15			
35,00	43,00	6,30		SI 35/43x6,3		
35,00	43,00	8,00			SI/L 35/43x8	
35,00	43,00	9,00		SI 35/43x9		
35,00	45,00	8,00		SI 35/45x8		
35,00	45,00	9,00	UN 35/45x9			
35,00	45,00	11,00	UN 35/45x11	SI 35/45x11		
35,00	45,00	13,50		SI 35/45x13,5		
35,00	46,00	9,00		SI 35/46x9		
35,00	46,00	10,00		SI 35/46x10		
35,00	48,00	11,00	UN 35/48x11			
35,00	50,00	11,00	UN 35/50x11	SI 35/50x11		
35,00	55,00	11,00	UN 35/55x11			
35,00	55,00	13,00	UN 35/55x13	SI 35/55x13		
36,00	44,00	7,00			SI/L 36/44x7	
36,00	**46,00**	**8,00**	**UN 36/46x8**	**SI 36/46x8**		
36,00	46,00	8,50			SI/L 36/46x8,5	
36,00	46,00	11,00		SI 36/46x11		
36,00	48,00	8,00		SI 36/48x8		
36,00	48,00	9,00		SI 36/48x9		
36,00	51,00	11,00		SI 36/51x11		
36,00	51,00	12,50		SI 3651x12,5		
36,00	70,00	11,00	UN 36/70x11			
37,00	45,00	6,30		SI 37/45x6,3		
38,00	44,50	5,30		SI 38/44,5x5,3		
38,00	45,00	5,50	UN 38/45x5,5	SI 38/45x5,5		
38,00	45,00	7,00		SI 38/45x7		
38,00	46,00	7,50	UN 38/46x7,5			
38,00	50,00	10,00	UN 38/50x10			
38,00	55,00	11,00	UN 38/55x11			
38,00	58,00	11,00	UN 38/58x11			
40,00	48,00	6,30		SI 40/48x6,3		
40,00	48,00	12,00	UN 40/48x12			
40,00	49,52	10,50		SI 40/49,52x10,5	SI/L 40/49,52x10,5	

Rod Seal
UN, RSA, SI, SI/L and SI/LA

d f8/h9	D H10	E +0,2	Part N° UN	Part N° SI	Part N° SI/L	Part N° SI/LA
40,00	50,00	7,50	UN 40/50x7,5			
40,00	**50,00**	**8,00**		**SI 40/50x8**	**SI/L 40/50x8**	
40,00	50,00	9,00	UN 40/50x9			
40,00	50,00	11,00	UN 40/50x11	SI 40/50x11		
40,00	50,00	13,50		SI 40/50x13,5		
40,00	52,00	9,00		SI 40/52x9		
40,00	55,00	11,00	UN 40/55x11	SI 40/55x11	SI/L 40/55x11	SI/LA 40/55x11
40,00	**55,00**	**12,50**		**SI 40/55x12,5**		
40,00	56,00	11,00	UN 40/56x11			
40,00	60,00	11,00	UN 40/60x11			
40,00	60,00	13,00		SI 40/60x13		
40,00	60,00	14,00	UN 40/60x14			
40,00	60,00	19,00	UN 40/60x19			
40,00	65,00	13,00	UN 40/65x13			
40,00	70,00	16,00	UN 40/70x16			
40,00	75,00	11,00	UN 40/75x11			
42,00	50,00	9,00	UN 42/50x12,5			
42,00	50,00	12,50			SI/L 42/50x12,5	
42,00	51,00	11,00				SI/LA 42/51x11
42,00	52,00	10,00	UN 42/52x10			
42,00	53,00	10,00			SI/L 42/53x10	
42,00	62,00	11,00		SI 42/62x11		
42,00	62,00	13,00	UN 42/62x13	SI 42/62x13		
45,00	52,00	14,00				SI/LA 45/52x14
45,00	53,00	6,30		SI 45/53x6,3		
45,00	53,00	11,00		SI 45/53x11		
45,00	53,00	12,50			SI/L 45/53x12,5	
45,00	53,00	13,00		SI 45/53x13		
45,00	55,00	7,50	UN 45/55x7,5			
45,00	**55,00**	**8,00**		**SI 45/55x8**		
45,00	55,00	11,00	UN 45/55x11	SI 45/55x11		
45,00	55,00	12,50			SI/L 45/55x12,5	
45,00	57,70	10,50		SI 45/57,7x10,5	SI/L 45/57,7x10,5	
45,00	58,00	10,00		SI 45/58x10		
45,00	60,00	11,00	UN 45/60x11	SI 45/60x11		
45,00	60,00	12,50		SI 45/60x12,5		
45,00	63,00	11,00	UN 45/63x11			
45,00	65,00	11,00	UN 45/65x11	SI 45/65x11		
45,00	65,00	13,00	UN 45/65x13	SI 45/65x13		
45,00	65,00	14,50		SI 45/65x14,5		
46,00	56,00	8,00		SI 46/56x8		
48,00	56,00	12,50			SI/L 48/56x12,5	
48,00	56,00	13,00			SI/L 48/56x13	
48,00	58,00	11,00	UN 48/58x11			
50,00	57,00	11,00			SI/L 50/57x11	
50,00	58,00	12,50			SI/L 50/58x12,5	
50,00	59,00	11,00				SI/LA 50/59x11
50,00	**60,00**	**8,00**		**SI 50/60x8**		**SI/LA 50/60x8**
50,00	60,00	11,00	UN 50/60x11	SI 50/60x11		
50,00	60,00	12,00	UN 50/60x12			
50,00	60,00	13,00		SI 50/60x13		
50,00	62,00	9,00		SI 50/62x9		
50,00	62,00	10,00	UN 50/62x10			
50,00	62,70	10,50		SI 50/62,7x10,5	SI/L 50/62,7x10,5	
50,00	63,00	7,00	UN 50/63x7			
50,00	65,00	11,00	UN 50/65x11	SI 50/65x11	SI/L 50/65x11	SI/LA 50/65x11
50,00	**65,00**	**12,50**		**SI 50/65x12,5**		
50,00	65,00	16,50			SI/L 50/65x16,5	
50,00	68,00	10,00		SI 50/68x10		
50,00	70,00	11,00	UN 50/70x11	SI 50/70x11		
50,00	70,00	13,00	UN 50/70x13	SI 50/70x13		SI/LA 50/70x13

Rod Seal
UN, RSA, SI, SI/L and SI/LA

d f8/h9	D H10	E +0,2	Part N° UN	Part N° SI	Part N° SI/L	Part N° SI/LA
50,00	70,00	14,50		SI 50/70x14,5		
50,00	70,00	15,00			SI/L 50/70x15	
50,00	70,00	19,00	UN 50/70x19			
52,00	62,00	13,00	UN 52/62x13			
53,00	63,00	7,50	UN 53/63x7,5			
55,00	62,50	10,00			SI/L 55/62,5x10	
55,00	63,00	12,50			SI/L 55/63x12,5	
55,00	63,00	13,00		SI 55/63x13		
55,00	65,00	8,00		SI 55/65x8		
55,00	65,00	9,50			SI/L 55/65x9,5	
55,00	65,00	11,00	UN 55/65x11	SI 55/65x11	SI/L 55/65x11	
55,00	65,00	13,00	UN 55/65x13	SI 55/65x13		
55,00	65,00	14,50		SI 55/65x14,5		
55,00	67,00	11,00		SI 55/67x11		
55,00	70,00	11,00		SI 55/70x11		
55,00	70,00	13,00	UN 55/70x13	SI 55/70x13		
55,00	75,00	13,00	UN 55/75x13	SI 55/75x13		
55,00	75,00	14,50		SI 55/75x14,5		
55,00	80,00	13,00	UN 55/80x13			
56,00	66,00	11,00		SI 56/66x11		
56,00	71,00	11,00		SI 56/71x11		
56,00	**71,00**	**12,50**		**SI 56/71x12,5**		
56,00	76,00	13,00		SI 56/76x13		
56,00	76,00	14,50		SI 56/76x14,5		
56,00	**76,00**	**16,00**		**SI 56/76x16**		
57,10	66,70	10,50			SI/L 57,1/66,7x10,5	
57,10	69,80	10,50			SI/L 57,1/69,8x10,5	
58,00	68,00	12,50			SI/L 58/68x12,5	
60,00	68,00	12,50			SI/L 60/68x12,5	
60,00	68,00	14,00				SI/LA 60/68x14
60,00	69,00	11,00				SI/LA 60/69x11
60,00	70,00	8,00		SI 60/70x8		
60,00	70,00	9,00	UN 60/70x9			
60,00	70,00	11,00	UN 60/70x11	SI 60/70x11		
60,00	70,00	12,50			SI/L 60/70x12,5	
60,00	70,00	13,00	UN 60/70x13	SI 60/70x13	SI/L 60/70x13	
60,00	72,00	9,00		SI 60/72x9		
60,00	72,00	10,00		SI 60/72x10		
60,00	75,00	11,00	UN 60/75x11	SI 60/75x11	SI/L 60/75x11	
60,00	75,00	13,00	UN 60/75x13	SI 60/75x13		
60,00	75,00	16,50			SI/L 60/75x16,5	
60,00	77,00	12,00		SI 60/77x12		
60,00	80,00	11,00	UN 60/80x11			
60,00	80,00	13,00	UN 60/80x13	SI 60/80x13		SI/LA 60/80x13
60,00	80,00	14,50		SI 60/80x14,5		
60,00	80,00	19,00	UN 60/80x19			
60,00	85,00	13,50	UN 60/85x13,5			
60,00	90,00	16,00	UN 60/90x16			
61,00	69,00	8,50		SI 61/69x8,5		
62,00	74,00	14,00		SI 62/74x14		
63,00	73,00	11,00		SI 63/73x11		
63,00	73,00	13,00		SI 63/73x13		
63,00	75,00	11,00	UN 63/75x11		SI/L 63/75x11	
63,00	78,00	11,00	UN 63/78x11	SI 63/78x11		
63,00	**78,00**	**12,50**		**SI 63/78x12,5**		
63,00	78,00	13,00		SI 63/78x13		
63,00	83,00	13,00		SI 63/83x13		SI/LA 63/83x13
63,00	83,00	14,50		SI 63/83x14,5	SI/L 63/83x14,5	
63,00	**83,00**	**16,00**	**UN 63/83x16**	**SI 63/83x16**		
63,50	76,20	10,50			SI/L 63,5/76,2x10,5	
65,00	73,00	12,50			SI/L 65/73x12,5	

d f8/h9	D H10	E +0,2	Part N° UN	Part N° SI	Part N° SI/L	Part N° SI/LA
80,00	90,00	11,00	UN 80/90x11			
80,00	90,00	13,00	UN 80/90x13	SI 80/90x13		
80,00	90,00	15,00		SI 80/90x15		
80,00	95,00	11,00		SI 80/95x11		
80,00	**95,00**	**12,50**		**SI 80/95x12,5**		**SI/LA 80/95x12,5**
80,00	95,00	13,00	UN 80/95x13	SI 80/95x13		
80,00	100,00	11,00	UN 80/100x11			
80,00	100,00	13,00	UN 80/100x13	SI 80/100x13		
80,00	100,00	14,50		SI 80/100x14,5		
80,00	**100,00**	**16,00**		**SI 80/100x16**		
82,00	92,00	11,00	UN 82/92x11			
82,50	97,50	13,00			SI/L 82,5/97,5x13	
84,50	94,00	8,80	UN 84,5/94x8,8			
85,00	92,50	10,00			SI/L 85/92,5x10	
85,00	93,00	12,50			SI/L 85/93x12,5	
85,00	95,00	8,00		SI 85/95x8		
85,00	95,00	9,50	UN 85/95x8,5			
85,00	95,00	13,00	UN 85/95x13			
85,00	100,00	12,00	UN 85/100x12	SI 85/100x12		
85,00	100,00	12,50		SI 85/100x12,5		
85,00	100,00	13,00	UN 85/100x13	SI 85/100x13		
85,00	105,00	13,00	UN 85/105x13	SI 85/105x13		
85,00	105,00	14,50		SI 85/105x14,5		
85,00	115,00	16,00	UN 85/115x16			
88,90	101,60	10,50			SI/L 88,9/101,6x10,5	
90,00	98,00	12,50			SI/L 90/98/12,5	
90,00	100,00	8,00	UN 90/100x8			
90,00	100,00	9,00	UN 90/100x9			
90,00	100,00	12,50		SI 90/100x12,5	SI/L 90/100x12,5	
90,00	100,00	13,00	UN 90/100x13			
90,00	105,00	9,50		SI 90/105x9,5		
90,00	105,00	10,50		SI 90/105x10,5		
90,00	**105,00**	**12,50**		**SI 90/105x12,5**	**SI/L 90/105x12,5**	
90,00	105,00	13,00	UN 90/105x13	SI 90/105x13		
90,00	110,00	13,00	UN 90/110x13	SI 90/110x13	SI/L 90/110x13	
90,00	**110,00**	**16,00**		**SI 90/110x16**		
90,00	110,00	19,00	UN 90/110x19			
90,00	115,00	23,00	UN 90/115x23			
91,00	99,00	8,50		SI 91/99x8,5		
93,00	101,00	12,50			SI/L 93/101x12,5	
93,00	104,00	11,00		SI 93/104x11		
95,00	103,00	12,50			SI/L 95/103x12,5	
95,00	105,00	9,50			SI/L 95/105x9,5	
95,00	105,00	11,00		SI 95/105x11		
95,00	105,00	13,00			SI/L 95/105x13	
95,00	110,00	13,00	UN 95/110x13			
95,00	110,00	16,00	UN 95/110x16			
95,00	112,00	12,00	UN 95/112x12			
95,00	115,00	13,00	UN 95/115x13	SI 95/115x13		
95,00	115,00	19,00	UN 95/115x19			
97,00	105,00	12,50			SI/L 97/105x12,5	
97,00	105,00	14,00				SI/LA 97/105x14
97,00	105,00	14,50			SI/L 97/105x14,5	
97,00	106,00	15,00			SI/L 97/106x15	
99,00	109,00	13,00			SI/L 99/109x13	
100,00	108,00	12,50			SI/L 100/108x12,5	
100,00	110,00	11,00			SI/L 100/110x11	
100,00	110,00	12,50			SI/L 100/110x12,5	
100,00	110,00	15,00		SI 100/110x15		
100,00	113,00	13,50		SI 100/113x13,5		
100,00	115,00	11,50		SI 100/115x11,5		

Rod Seal
UN, RSA, SI, SI/L and SI/LA

d f8/h9	D H10	E +0,2	Part N° UN	Part N° SI	Part N° SI/L	Part N° SI/LA
65,00	73,00	12,50			SI/L 65/73x12,5	
65,00	75,00	11,00		SI 65/75x11	SI/L 65/75x11	
65,00	75,00	13,00	UN 65/75x13	SI 65/75x13		
65,00	75,00	14,50		SI 65/75x14,5		
65,00	77,00	10,00		SI 65/77x10		
65,00	77,70	10,50			SI/L 65/77,7x14,5	
65,00	80,00	11,00		SI 65/80x11		
65,00	80,00	12,00	UN 65/80x12			
65,00	80,00	13,00	UN 65/80x13	SI 65/80x13		
65,00	85,00	11,00	UN 65/85x11			
65,00	85,00	13,00	UN 65/85x13	SI 65/85x13		
65,00	85,00	14,50		SI 65/85x14,5		
66,00	76,00	9,00	UN 66/76x9			
66,00	80,00	11,00	UN 66/80x11		SI/L 66/80x11	
66,00	80,00	14,00	UN 66/80x14			
67,00	75,00	12,50			SI/L 67/75x12,5	
67,00	77,00	11,00	UN 67/77x11			
67,00	77,00	13,00	UN 67/77x13			
69,80	82,50	10,50			SI/L 69,8/82,5x10,5	
69,85	88,90	12,70	UN 69,8/88,9x12,7			
70,00	77,50	10,00			SI/L 70/77,5x10	
70,00	79,00	14,00			SI/L 70/79x14	
70,00	80,00	6,00	UN 70/80x6			
70,00	80,00	6,50		SI 70/80x6,5		
70,00	80,00	8,00		SI 70/80x8		SI/LA 70/80x8
70,00	80,00	9,00	UN 70/80x9			
70,00	80,00	11,00	UN 70/80x11	SI 70/80x11		
70,00	80,00	12,50			SI/L 70/80x12,5	
70,00	80,00	13,00	UN 70/80x13	SI 70/80x13	SI/L 70/80x13	
70,00	85,00	11,00		SI 70/85x11		
70,00	**85,00**	**12,50**		**SI 70/85x12,5**	**SI/L 70/85x12,5**	**SI/LA 70/85x12,5**
70,00	85,00	13,00	UN 70/85x13	SI 70/85x13		
70,00	90,00	13,00	UN 70/90x13	SI 70/90x13	SI/L 70/90x13	
70,00	90,00	14,50		SI 70/90x14,5		
70,00	**90,00**	**16,00**		**SI 70/90x16**		
70,00	90,00	19,00	UN 70/90x19			
70,00	95,00	13,00	UN 70/95x13			
73,00	82,40	7,80			SI/L 73/82,4x7,8	
73,00	82,50	8,00		SI 73/82,5x8		
75,00	83,00	12,50			SI/L 75/83x12,5	
75,00	85,00	8,00		SI 75/85x8		
75,00	85,00	9,50			SI/L 75/85x9,5	
75,00	85,00	11,00			SI/L 75/85x11	
75,00	85,00	12,50			SI/L 75/85x12,5	
75,00	85,00	13,00	UN 75/85x13	SI 75/85x13		
75,00	90,00	8,50	UN 75/90x8,5			
75,00	90,00	11,00	UN 75/90x11	SI 75/90x11		
75,00	90,00	13,00	UN 75/90x13	SI 75/90x13		
75,00	95,00	13,00	UN 75/95x13	SI 75/95x13		
75,00	95,00	14,50		SI 75/95x13		
76,00	84,00	8,50		SI 76/84x8,5		
76,20	88,90	10,50			SI/L 76,2/88,9x10,5	
77,00	86,00	15,00			SI/L 77/86x15	
78,00	86,00	12,50			SI/L 78/86x12,5	
78,00	86,00	14,00				SI/LA 78/86x14
78,00	86,00	14,50			SI/L 78/86x14,5	
78,00	88,00	13,00			SI/L 78/88x13	
78,00	90,00	13,00			SI/L 78/90x13	
78,00	93,00	11,50	UN 78/93x11,5			
79,40	88,90	10,50			SI/L 79,4/88,9x10,5	
80,00	88,00	12,50			SI/L 80/88x12,5	

Rod Seal
UN, RSA, SI, SI/L and SI/LA

d f8/h9	D H10	E +0,2	Part N° UN	Part N° SI	Part N° SI/L	Part N° SI/LA
100,00	115,00	13,00	UN 100/115x13	SI 100/115x13		
100,00	120,00	13,00	UN 100/120x13	SI 100/120x13		
100,00	120,00	14,50		SI 100/120x14,5		SI/LA 100/120x14,5
100,00	**120,00**	**16,00**		**SI 100/120x16**		
100,00	125,00	13,00	UN 100/125x13			
100,00	125,00	16,00	UN 100/125x16			
100,00	125,00	20,00		SI 100/125x20		
100,00	130,00	13,00	UN 100/130x13			
105,00	113,00	12,50			SI/L 105/113x12,5	
105,00	113,00	14,50			SI/L 105/113x14,5	
105,00	115,00	11,00		SI 105/115x11		
105,00	115,00	12,50		SI 105/115x12,5	SI/L 105/115x12,5	
105,00	115,00	14,50		SI 105/115x14,5		
105,00	120,00	9,00	UN 105/120x9			
105,00	120,00	16,00	UN 105/120x16			
105,00	125,00	13,00	UN 105/125x13	SI 105/125x13		SI/LA 105/125x13
105,00	125,00	16,00	UN 105/125x16			
106,00	120,00	9,50	UN 106/120x9,5			
110,00	118,00	12,50			SI/L 110/118x12,5	
110,00	125,00	12,00		SI 110/125x12		
110,00	125,00	13,00	UN 110/125x13			
110,00	125,00	16,00	UN 110/125x16	SI 110/125x16		
110,00	130,00	13,00		SI 110/130x13		
110,00	**130,00**	**16,00**	**UN 110/130x16**	**SI 110/130x16**		
110,00	130,00	19,00	UN 110/130x19			
110,00	**135,00**	**20,00**		**SI 110/135x20**		
112,00	122,00	11,00			SI/L 112/122x11	
113,00	123,00	9,50			SI/L 113/123x9,5	
113,00	125,00	10,50	UN 113/125x10,5			
115,00	123,00	12,50			SI/L 115/123x12,5	
115,00	125,00	13,00			SI/L 115/125x13	
115,00	125,00	15,00			SI/L 115/125x15	
115,00	126,00	16,00	UN 115/126x16			
115,00	130,00	11,00			SI/L 115/130x11	
115,00	135,00	13,00		SI 115/135x13		
115,00	135,00	16,00	UN 115/135x16			
115,00	140,00	16,00	UN 115/140x16			
115,00	140,00	23,00	UN 115/140x23			
117,00	126,00	15,00			SI/L 117/126x15	
118,00	126,00	12,50			SI/L 118/126x12,5	
118,00	126,00	14,00				SI/LA 118/126x14
118,00	126,00	14,50			SI/L 118/126x14,5	
120,00	128,00	12,50			SI/L 120/128x12,5	
120,00	130,00	8,00		SI 120/130x8		
120,00	130,00	12,50		SI 120/130x12,5	SI/L 120/130x12,5	
120,00	130,00	13,00			SI/L 120/130x13	
120,00	130,00	15,00	UN 120/130x15			
120,00	132,00	11,00		SI 120/132x11		
120,00	135,00	12,50		SI 120/135x12,5		
120,00	135,00	16,00	UN 120/135x16	SI 120/135x16		
120,00	140,00	13,00		SI 120/140x13		SI/LA 120/140x13
120,00	140,00	16,00	UN 120/140x16	SI 120/140x16		
121,00	135,00	10,00			SI/L 121/135x10	
125,00	133,00	12,50			SI/L 125/133x12,5	
125,00	135,00	11,00			SI/L 125/135x11	
125,00	140,00	12,00	UN 125/140x12			
125,00	140,00	16,00	UN 125/140x16			
125,00	145,00	13,00		SI 125/145x13		SI/LA 125/145x13
125,00	**145,00**	**16,00**	**UN 125/145x16**	**SI 125/145x16**		
125,00	145,00	19,00	UN 125/145x19			
125,00	150,00	15,00		SI 125/150x15		

d f8/h9	D H10	E +0,2	Part N° UN	Part N° SI	Part N° SI/L	Part N° SI/LA
125,00	**150,00**	**20,00**		**SI 125/150x20**		
125,00	155,00	16,00	UN 125/155x16			
125,00	155,00	19,00		SI 125/155x19		
127,00	139,70	10,00		SI 127/139,7x10		
127,00	140,00	12,50			SI/L 127/140x12,5	
128,00	136,00	12,50			SI/L 128/136x12,5	
130,00	138,00	12,50			SI/L 130/138x12,5	
130,00	140,00	8,00		SI 130/140x8		
130,00	145,00	13,00		SI 130/145x13		
130,00	145,00	15,00		SI 130/145x15		
130,00	145,00	16,00		SI 130/145x16		
130,00	150,00	13,00		SI 130/150x13		
130,00	150,00	16,00	UN 130/150x16	SI 130/150x16		
131,00	150,00	14,00			SI/L 131/150x14	
132,00	142,00	9,50			SI/L 132/142x9,5	
135,00	143,00	12,50			SI/L 135/143x12,5	
135,00	150,00	12,50			SI/L 135/150x12,5	
135,00	150,00	16,00	UN 135/15016		SI/L 135/150x16	
135,00	155,00	16,00	UN 135/155x16			
135,00	160,00	16,00	UN 135/16016			
137,00	146,00	15,00			SI/L 137/146x15	
140,00	148,00	12,50			SI/L 140/148x12,5	
140,00	150,00	12,50		SI 140/150x12,5	SI/L 140/150x12,5	
140,00	155,00	13,00		SI 140/155x13		
140,00	160,00	13,00	UN 140/160x13	SI 140/160x13		
140,00	**160,00**	**16,00**	**UN 140/160x16**	**SI 140/160x16**		
140,00	**165,00**	**20,00**		**SI 140/165x20**		
141,00	151,00	13,00			SI/L 141/151x13	
143,00	151,00	12,50			SI/L 143/151x13	
143,00	151,00	14,00			SI/L 143/151x14	
143,00	151,00	14,50			SI/L 143/151x14,5	
145,00	155,00	13,00			SI/L 145/155x13	
145,00	157,70	10,00		SI 145/157,7x10		
145,00	160,00	13,00			SI/L 145/160x13	
145,00	165,00	16,00	UN 145/165x16			
147,00	160,00	13,00		SI 147/160x13		
148,00	160,00	13,00			SI/L 148/160x13	
150,00	170,00	13,00		SI 150/170x13		
150,00	170,00	14,50		SI 150/170x14,5		
150,00	170,00	16,00	UN 150/170x16	SI 150/170x16		
150,00	170,00	19,00	UN 150170x19			
152,00	160,00	12,50			SI/L 152/160x12,5	
152,00	162,00	11,00			SI/L 152/162x11	
152,00	171,00	12,50			SI/L 152/171x12,5	
152,50	160,50	15,00			SI/L 152,5/160,5x15	
155,00	163,00	12,50			SI/L 155/163x12,5	
160,00	170,00	12,50			SI/L 160/170x12,5	
160,00	180,00	13,00		SI 160/180x13		
160,00	180,00	16,00	UN 160/180x16	SI 160/180x16		
160,00	185,00	20,00		SI 160/185x20		
162,00	172,00	13,00			SI/L 162/172x13	
165,00	184,00	14,00			SI/L 165/184x14	
165,00	195,00	21,00		SI 165/195x21		
170,00	178,00	12,50			SI/L 170/178x12,5	
170,00	180,00	13,00			SI/L 170/180x13	
170,00	190,00	13,00		SI 170/190x13		
170,00	190,00	16,00	UN 170/190x16	SI 170/190x16		
170,00	200,00	19,00	UN 170/200x19			
171,00	179,00	12,50			SI/L 171/179x12,5	
171,00	179,00	14,00				SI/LA 171/179x14
175,00	185,00	13,00			SI/L 175/185x13	

Rod Seal
UN, RSA, SI, SI/L and SI/LA

d f8/h9	D H10	E +0,2	Part N° UN	Part N° SI	Part N° SI/L	Part N° SI/LA
175,00	185,00	13,00			SI/L 175/185x13	
175,00	200,00	16,00	UN 175/200x16			
177,00	205,00	20,00			SI/L 177/205x20	
180,00	188,00	14,50			SI/L 180/188x14,5	
180,00	190,00	11,00			SI/L 180/190x11	
180,00	195,00	13,50			SI/L 180/195x13,5	
180,00	200,00	13,00		SI 180/200x13		
180,00	200,00	16,00	UN 180/200x16	SI 180/200x16		
180,00	200,00	20,00		SI 180/200x20		
180,00	220,00	21,00	UN 180/220x21			
185,00	193,00	12,50			SI/L 185/193x12,5	
190,00	210,00	13,00		SI 190/210x13		
190,00	210,00	16,00		SI 190/210x16		
198,00	207,60	7,50		SI 198/207,6x7,5		
200,00	208,00	12,50			SI/L 200/208x12,5	
200,00	212,00	16,00		SI 200/212x16		
200,00	220,00	13,00		SI 200/220x13		
200,00	220,00	16,00		SI 200/220x16		
200,00	225,00	19,00	UN 200/225x19			
200,00	**225,00**	**20,00**		**SI 200/225x20**		
205,00	220,00	13,50			SI/L 205/220x13,5	
209,00	228,00	14,00			SI/L 209/228x14	
210,00	230,00	13,00		SI 210/230x13		
210,00	230,00	16,00		SI 210/230x16		
210,00	235,00	26,00		SI 210/235x26		
212,00	220,00	14,50			SI/L 212/220x14,5	
220,00	240,00	13,00		SI 220/240x13		
220,00	240,00	16,00		SI 220/240x16		
220,00	250,00	19,00	UN 220/250x19	SI 220/250x19		
225,00	245,00	16,00	UN 225/245x16			
230,00	250,00	13,00		SI 230/250x13		
230,00	260,00	25,00		SI 230/260x25		
232,00	246,00	13,00			SI/L 232/246x13	
240,00	260,00	13,00		SI 240/260x13		
240,00	260,00	16,00		SI 240/260x16		
240,00	270,00	19,00		SI 240/270x19		
245,00	270,00	16,00	UN 245/270x16			
250,00	270,00	13,00		SI 250/270x13		
250,00	270,00	16,00		SI 250/270x13		
250,00	280,00	23,00		SI 250/280x23		
265,00	290,00	18,00	UN 265/290x18			
270,00	290,00	18,00	UN 270/290x18			
270,00	300,00	16,00	UN 270/300x16			
270,00	300,00	19,00		SI 270/300x19		
280,00	300,00	16,00	UN 280/300x16			
280,00	305,00	16,00		SI 280/305x16		
280,00	310,00	25,00		SI 280/310x25		
305,00	320,00	18,00	UN 305/320x18			
360,00	390,00	23,00	UN 360/390x23			

These sizes also available in FPM.
Futher sizes/measurements and emperial sizes available on request
Bold figures correspond to mounting spaces as per DIN ISO 5597.

Example for ordering Rod Seal:

UN 60 / 70 x 9

Type
Rod diameter d
Groove diameter D
Groove width

WARNING: Limits of application stated herein are standard values. They could be individually transgressed with due consideration to respective service conditions. In the event of a large duty cycle, pulsating operation and other complex operational conditions, simultaneous transgression of these values is not recommended. Due to a large variety of service conditions that may arise in course of actual use, the company does not take responsibility of or guarantee the functional accuracy of the individual components. Rights for changes are reserved.

Rod Seal
TS, TS/L and TS/LA

Polyurethane rod seals of the TS, TS/L and TS/LA series cover a majority of applications due to outstanding sealing properties.

They are specifically designed for intermediate and heavy duty and show excellent sealing properties and a much longer life span compared to NBR.

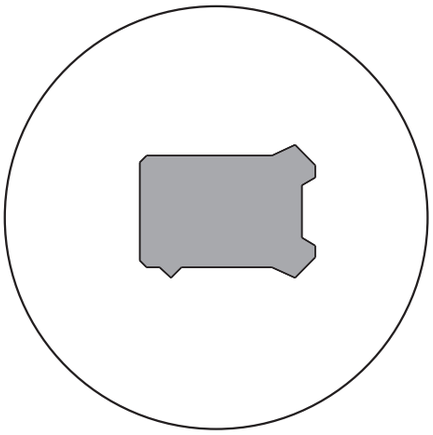

Material : Polyurethan
Operating pressure: TS and TS/L max 40 MPa (400 bar)
TS/LA max 50 MPa (500 bar)
Velocity : reciprocating to 0.8 m/s
Temperature : -40 to +110 °C

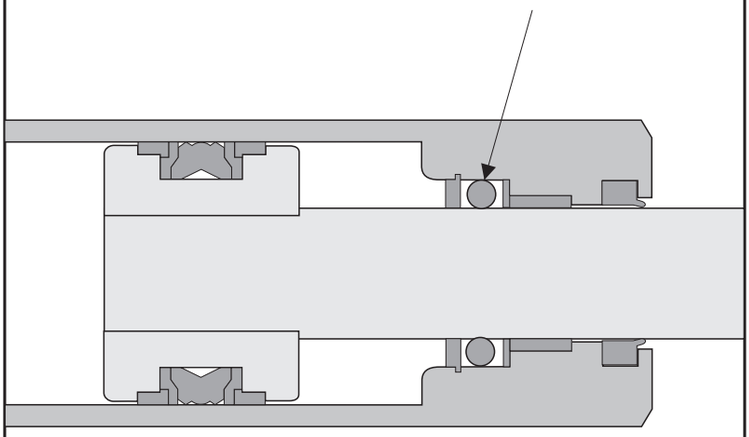

Special Features:

- Anti-wear modified Polyurethane
- Good wiper action even at low pressure due to compact profile
- Enhanced pre-stressing yields very good sealing effect even under static requirement
- Simple snap assembly in closed groove possible
- Much better extrusion behaviour than NBR
- Larger extrusion gaps are therefore possible
- Small mounting space
- Cost conveniant design
- Extensive size range is available.

Rod Seal
TS, TS/L and TS/LA

Detailed Information

Polyurethane rod seals of the series TS toTS/LA basically offer a "compact construction".

TS

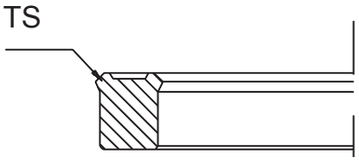

TS

This profile is the normal design in compact construction with outstanding sealing behaviour and secure wiper action. Pre-stressing of seal is done by increasing external diameter.

TS/L

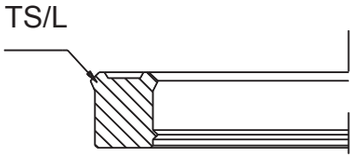

TS/L

This modern compact design has the so -called "secondary lip" on the dynamic side. The advantages are:

- Reduced friction due to lubricant between the two lips
- Significant stick slip improvements
- Temperature reduction at the dynamic sealing lip, gives longer life
- With fixation of rod seal on outer diameter, the seal will not tilt at high velocity
- Low wear due to stable positioning in gland groove
- Stable position in gland at low temperatures

By virtue of its profile form, TS/L is the series which works well in most applications with improved life.

TS/LA

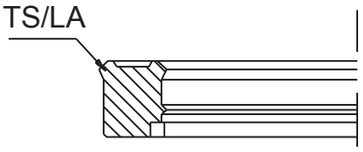

TS/LA

All advantages mentioned for profiles TS and TS/L also apply to the TS/LA. A special advantage of this design is that bigger extrusion gap and higher pressures can also operate through the intergrated back-up ring.

All illustrated rod seals from TS to TS/LA offer special advantages to the user. Please enquire with our technical services as to which variant is the best for your application. We welcome your enquiries for use with Bio Oils.

Rod Seal
TS, TS/L and TS/LA

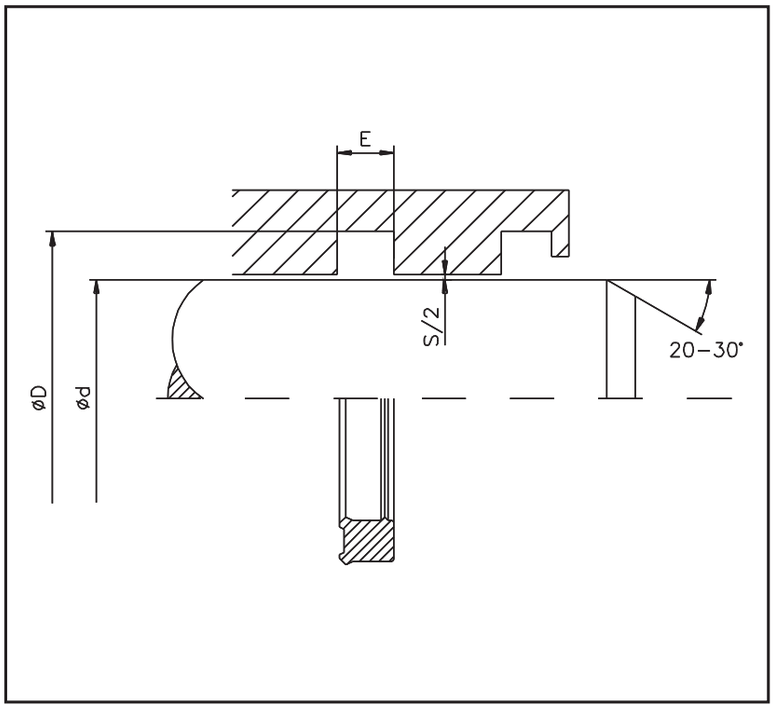

Limitations on Use

Operating pressure	:TS, TS/L up to 40 MPa (400 bar)
	TS/LA up to 50 MPa (500 bar)
Velocity	:reciprocating to 0.8 m/s
Temperature	: -40 bis +110 °C

Media for Use

Mineral oil based hydraulic oils, non-polluting pressure fluids (Bio Oils) on request.

Surface Finish

Surfaces	Rz	Ra
Rod diameter d	2,0 µm	0,3 µm
Groove diameter D	6,3 µm	1,6 µm
Groove flanks	10,0 µm	3,2 µm

Diameter Clearance

Max. Diameter Clearance S [mm]	Max. Pressure [bar] HS 240 / HS 241	HS 242
0,80	100	200
0,60	150	250
0,40	200	350
0,20	400	500

d f8/h9	D H10	E +0,2	Part N° TS	Part N° TS/L	Part N° TS/LA
6,00	**14,00**	**6,30**		**TS/L 6/14x6,3**	
6,35	14,30	7,00		TS/L 6,35/14,3x7	
8,00	**16,00**	**6,30**		**TS/L 8/16x6,3**	
10,00	16,00	5,40		TS/L 10/16x5,4	
10,00	**18,00**	**6,30**		**TS/L 10/18x6,3**	
12,00	18,00	5,00	TS 12/18x5		
12,00	19,00	6,30		TS/L 12/19x6,3	
12,00	**20,00**	**6,30**	**TS 12/20x6,3**	**TS/L 12/20x6,3**	
12,00	23,00	7,50		TS/L 12/23x7,5	
14,00	20,00	5,30		TS/L 14/20x5,3	
14,00	**22,00**	**6,30**		**TS/L 14/22x6,3**	
15,00	21,50	5,00		TS/L 15/21,5x5	
15,40	25,50	7,40		TS/L 15,4/25,5x7,4	
16,00	22,00	4,50	TS 16/22x4,5		
16,00	24,00	7,00	TS 16/24x7		
16,00	24,00	6,30	TS 16/24x6,3	TS/L 16/24x6,3	
18,00	25,00	5,70	TS 18/25x5,7		
18,00	**26,00**	**6,30**		**TS/L 18/26x6,3**	
18,00	26,00	7,00	TS 18/26x7	TS/L 18/26x7	
18,00	26,00	9,00		TS/L 18/26x9	
18,00	28,00	6,30	TS 18/28x6,3	TS/L 18/28x6,3	
18,00	**28,00**	**8,00**	**TS 18/28x8**		
19,50	27,50	9,00		TS/L 19,5/27,5x9	
20,00	25,00	3,50	TS 20/25x3,5		
20,00	25,00	4,50	TS 20/25x4,5		
20,00	26,00	6,00	TS 20/26x6	TS/L 20/26x6	
20,00	27,00	6,50	TS 20/27x6,5		
20,00	**28,00**	**6,30**	**TS 20/28x6,3**	**TS/L 20/28x6,3**	
20,00	28,00	8,00	TS 20/28x8		
20,00	30,00	5,00		TS/L 20/30x5	
20,00	**30,00**	**8,00**	**TS 20/30x8**	**TS/L 20/30x8**	
20,00	30,00	9,00	TS 20/30x9		

Rod Seal
TS, TS/L and TS/LA

d f8/h9	D H10	E +0,2	Part N° TS	Part N° TS/L	Part N° TS/LA
20,00	30,00	11,00	TS 20/30x11		
21,00	27,00	5,00	TS 21/27x5		
22,00	28,00	5,50	TS 22/28x5,5		
22,00	29,00	5,60	TS 22/29x5,6		
22,00	**30,00**	**6,30**		**TS/L 22/30x6,3**	
22,00	30,00	7,00	TS 22/30x7		
22,00	30,00	8,00	TS 22/30x8		
22,00	**32,00**	**8,00**	**TS 22/32x8**		
22,00	32,00	9,00	TS 22/32x9		
24,00	30,00	5,00	TS 24/30x5		
24,00	34,00	6,50	TS 24/34x6,5		
25,00	32,00	5,00	TS 25/32x5		
25,00	**33,00**	**6,30**	**TS 25/33x6,3**	**TS/L 25/33x6,3**	
25,00	33,00	7,50		TS/L 25/33x7,5	
25,00	33,00	8,00		TS/L 25/33x8	
25,00	33,00	9,00	TS 25/33x9		
25,00	35,00	6,00	TS 25/65x6		
25,00	35,00	6,30		TS/L 25/35x6,3	
25,00	**35,00**	**8,00**	**TS 25/35x8**	**TS/L 25/35x8**	
25,00	35,00	9,00	TS 25/35x9	TS/L 25/35x9	
25,00	35,00	10,00	TS 25/35x10		
25,00	35,00	11,00	TS 25/35x11		
25,00	36,00	6,00	TS 25/36x6		
25,00	38,00	11,00	TS 25/38x11		
28,00	34,20	6,00		TS/L 28/34,2x6	
28,00	36,00	6,30	TS 28/36x6,3	TS/L 28/36x6,3	
28,00	36,00	9,00	TS 28/36x9		
28,00	**38,00**	**6,30**		**TS/L 28/38x6,3**	
28,00	**38,00**	**8,00**	**TS 28/38x8**	**TS/L 28/38x8**	
30,00	38,00	6,30	TS 30/38x6,3	TS/L 30/38x6,3	
30,00	38,00	8,00		TS/L 30/38x8	
30,00	38,00	9,00	TS 30/38x9		
30,00	40,00	7,50		TS/L 30/40x7,5	
30,00	40,00	8,00	TS 30/40x8		
30,00	40,00	11,00	TS 30/40x11	TS/L 30/40x11	
32,00	40,00	6,30	TS 32/40x6,3	TS/L 32/40x6,3	
32,00	40,00	7,70		TS/L 32/40x7,7	
32,00	40,00	9,00	TS 32/40x9	TS/L 32/40x9	
32,00	41,50	8,90		TS/L 32/41,5x8,9	
32,00	**42,00**	**8,00**	**TS 32/42x8**		
32,00	42,00	9,00	TS 32/42x9		
32,00	42,00	11,00	TS 32/42x11		
32,00	42,53	9,00		TS/L 32/42,5x9	
32,00	45,00	10,50			TS/LA 32/45x10,5
35,00	43,00	6,30		TS/L 35/43x6,3	
35,00	43,00	7,00	TS 35/43x7	TS/L 35/43x7	
35,00	43,00	9,00	TS 35/43x9		
35,00	45,00	8,00	TS 35/45x8		
35,00	45,00	11,00	TS 35/45x11	TS/L 35/45x11	
35,00	45,00	13,50		TS/L 35/45x13,5	
35,00	50,00	11,00		TS/L 35/50x11	
36,00	44,00	6,30	TS 36/44x6,3	TS/L 36/44x6,3	
36,00	44,00	7,00	TS 36/44x7		
36,00	44,00	9,00	TS 36/44x9		
36,00	**46,00**	**8,00**	**TS 36/46x8**		TS/LA 36/46x8
36,00	46,00	11,00	TS 36/46x11		
38,00	45,00	7,00	TS 38/45x7		
38,00	50,00	9,50		TS/L 38/50x9,5	
40,00	48,00	6,30	TS 40/48x6,3	TS/L 40/48x6,3	
40,00	48,00	9,00	TS 40/48x9	TS/L 40/48x9	TS/LA 40/48x9

Rod Seal
TS, TS/L and TS/LA

d f8/h9	D H10	E +0,2	Part N° TS	Part N° TS/L	Part N° TS/LA
40,00	49,52	10,50		TS/L 40/49,5x10,5	
45,00	53,00	7,00	TS 45/53x7		
45,00	53,00	9,00	TS 45/53x9	TS/L 45/53x9	
45,00	53,00	11,00	TS 45/53x11		
45,00	**55,00**	**8,00**	**TS 45/55x8**	**TS/L 45/55x8**	
45,00	55,00	11,00	TS 45/55x11	TS/L 45/55x11	TS/LA 45/55x11
45,00	57,70	10,50		TS/L 45/57,7x10,5	
45,00	60,00	11,00			TS/LA 45/60x11
46,00	54,00	9,00	TS 46/54x9		
48,00	60,00	7,00		TS/L 48/60x7	
49,50	65,30	11,00		TS/L 49,5/65,3x11	
50,00	58,00	9,00	TS 50/58x9		
50,00	**60,00**	**8,00**	**TS 50/60x8**	**TS/L 50/60x8**	
50,00	60,00	10,00		TS/L 50/60x10	
50,00	60,00	11,00	TS 50/60x11	TS/L 50/60x11	TS/LA 50/60x11
50,00	62,00	9,00	TS 50/62x9		
50,00	62,00	11,00	TS 50/62x11		
50,00	62,70	10,50		TS/L 50/62,7x10,5	
50,00	65,00	11,00	TS 50/65x11	TS/L 50/65x11	TS/LA 50/65x11
50,00	70,00	13,00			TS/LA 50/70x13
50,00	70,00	14,50		TS/L 50/70x14,5	
55,00	63,00	9,00	TS 55/63x9	TS/L 55/63x9	
55,00	65,00	8,00	TS 55/65x8		
55,00	65,00	11,00	TS 55/65x11	TS/L 55/65x11	TS/LA 55/65x11
55,00	65,00	13,00	TS 55/65x13	TS/L 55/65x13	
56,00	66,00	7,50	TS 56/66x7,5		
56,00	66,00	11,00	TS 56/66x11		
56,00	**71,00**	**12,50**		**TS/L 56/71x12,5**	**TS/LA 56/71x12,5**
57,10	66,70	10,50		TS/L 57,1/66,7x10,5	
57,10	69,80	10,50		TS/L 57,1/69,8x10,5	
60,00	68,00	9,00	TS 60/68x9	TS/L 60/68x9	
60,00	68,00	12,50		TS/L 60/68x12,5	
60,00	68,00	14,00	TS 60/68x14		
60,00	70,00	8,00	TS 60/70x8		
60,00	70,00	11,00	TS 60/70x11		
60,00	70,00	12,50		TS/L 60/70x12,5	
60,00	70,00	13,00	TS 60/70x13		
60,00	70,00	13,50			TS/LA 60/70x13,5
60,00	71,00	9,00		TS/L 60/71x9	
60,00	72,00	10,00	TS 60/72x10	TS/L 60/72x10	
60,00	75,00	11,00		TS/L 60/75x11	
60,00	75,00	13,00			TS/LA 60/75x13
60,00	80,00	13,00			TS/LA 60/80x13
61,00	69,00	9,00	TS 61/69x9	TS/L 61/69x9	
63,00	71,00	9,00	TS 63/71x9		
63,00	75,00	11,00	TS 63/75x11		
63,00	75,00	13,00			TS/LA 63/75x13
63,00	**78,00**	**12,50**			**TS/LA 63/78x12,5**
63,00	78,00	13,50			TS/LA 63/78x13,5
63,00	83,00	13,00			TS/LA 63/83x13
63,00	83,00	14,50			TS/LA 63/83x14,5
63,50	76,20	10,50		TS/L 63,5/76,2x10,5	
65,00	75,00	13,00	TS 65/75x13		TS/LA 65/75x13
65,00	75,00	13,50		TS/L 65/75x13,5	
65,00	77,70	10,50		TS/L 65/77,7x10,5	
65,00	79,20	12,50		TS/L 65/79,2x12,5	
65,00	80,00	12,50			TS/LA 65/80x12,5
66,00	80,00	11,00	TS 66/80x11		
66,70	76,20	10,50		TS/L 66,7/76,2x10,5	
68,00	76,00	9,00	TS 68/76x9		

Rod Seal
TS, TS/L and TS/LA

d f8/h9	D H10	E +0,2	Part N° TS	Part N° TS/L	Part N° TS/LA
69,80	82,50	10,50		TS/L 69,8/82,5x10,5	
70,00	80,00	7,50	TS 70/80x7,5		
70,00	80,00	8,00	TS 70/80x8		
70,00	80,00	11,00	TS 70/80x11		
70,00	80,00	13,00	TS 70/80x13		
70,00	82,00	10,00	TS 70/82x10		
70,00	**85,00**	**12,50**		**TS/L 70/85x12,5**	
70,00	85,00	13,00			TS/LA 70/85x13
70,00	90,00	13,00			TS/LA 70/90x13
70,00	90,00	14,50			TS/LA 70/90x14,5
72,00	78,00	7,00	TS 72/78x7		
73,00	82,40	8,00		TS/L 73/82,4x8	
75,00	83,00	9,00		TS/L 75/83x9	
75,00	85,00	8,00	TS 75/85x8	TS/L 75/85x8	
75,00	85,00	13,00	TS 75/85x13	TS/L 75/85x13	TS/LA 75/85x13
75,00	90,00	11,50		TS/L 75/90x11,5	
75,00	90,00	13,00			TS/LA 75/90x13
75,00	95,00	14,50			TS/LA 75/95x14,5
76,00	84,00	9,00	TS 76/84x9		
76,20	88,90	10,50		TS/L 76,2/88,9x10,5	
76,20	91,20	13,00		TS/L 76,2/91,2x13	
78,00	86,00	14,00	TS 78/86x14		
78,00	93,00	11,50	TS 78/93x11,5		
79,40	88,90	10,50		TS/L 79,4/88,9x10,5	
80,00	88,00	10,00			TS/LA 80/88x10
80,00	88,00	12,50		TS/L 80/88x12,5	
80,00	90,00	8,00	TS 80/90x8		
80,00	90,00	13,00	TS 80/90x13	TS/L 80/90x13	
80,00	90,00	15,00	TS 80/90x15		
80,00	92,00	9,60		TS/L 80/92x9,6	
80,00	95,00	12,00		TS/L 80/95x12	
80,00	95,00	12,50		TS/L 80/95x12,5	TS/LA 80/95x12,5
80,00	96,00	10,50		TS/L 80/96x10,5	TS/LA 80/96x10,5
80,00	100,00	12,50			TS/LA 80/100x12,5
80,00	100,00	14,50			TS/LA 80/100x14,5
82,50	97,50	13,00		TS/L 82,5/97,5x13	
85,00	93,00	12,50		TS/L 85/93x12,5	
85,00	95,00	8,00	TS 85/95x8		
85,00	95,00	13,00		TS/L 85/95x13	
85,00	97,00	9,50	TS 85/97x9,5		
85,00	105,00	13,00			TS/LA 85/105x13
85,00	105,00	14,50			TS/LA 85/105x14,5
86,00	92,00	7,00	TS 86/92x7		
86,00	101,00	13,00		TS/L 86/101x13	
88,00	96,00	9,00	TS 88/96x9	TS/L 88/96x9	
88,90	101,60	10,50		TS/L 88,9/101,6x10,5	
90,00	96,00	5,50	TS 90/96x5,5		
90,00	100,00	7,50	TS 90/100x7,5		
90,00	102,00	10,00		TS/L 90/102x10	
90,00	105,00	9,50			TS/LA 90/105x9,5
90,00	**105,00**	**12,50**		**TS/L 90/105x12,5**	
90,00	105,00	13,00			TS/LA 90/105x13
90,00	110,00	12,50			TS/LA 90/110x12,5
90,00	110,00	13,00			TS/LA 90/110x13
90,00	110,00	15,00		TS/L 90/110x15	
91,00	99,00	9,00	TS 91/99x9	TS/L 91/99x9	
95,00	112,00	12,50	TS 95/112x12,5		
95,00	115,00	14,50			TS/LA 95/115x14,5
97,00	105,00	14,00	TS 97/105x14		
100,00	108,00	12,50		TS/L 100/108x12,5	

Rod Seal
TS, TS/L and TS/LA

d f8/h9	D H10	E +0,2	Part N° TS	Part N° TS/L	Part N° TS/LA
100,00	110,00	13,50			TS/LA 100/110x13,5
100,00	113,00	13,50			TS/LA 100/11x13,5
100,00	115,00	13,00		TS/L 100/115x13	
100,00	120,00	14,50			TS/LA 100/120x14,5
105,00	125,00	13,00			TS/LA 105/125x13
107,00	115,00	9,00	TS 107/115x9		
108,00	116,00	9,00		TS/L 108/116x9	
110,00	120,00	14,50			TS/LA 110/120x12,5
110,00	125,00	12,00		TS/L 110/125x12	
110,00	125,00	13,00			TS/LA 110/125x13
110,00	130,00	13,00			TS/LA 110/130x13
112,00	127,00	13,00		TS/L 112/127x13	
115,00	130,00	17,00			TS/LA 115/130x17
118,00	126,00	14,00	TS 118/126x14		
120,00	128,00	12,50		TS/L 120/128x12,5	
120,00	135,00	16,00	TS 120/135x16		
120,00	140,00	12,50			TS/LA 120/140x12,5
126,00	134,00	9,00	TS 126/134x9	TS/L 126/134x9	
127,00	140,00	13,50			TS/LA 127/140x13,5
130,00	145,00	16,00		TS/L 130/145x16	
130,00	155,00	16,00		TS/L 130/155x16	
135,00	150,00	12,50		TS/L 135/150x12,5	
137,00	152,00	13,00		TS/L137/152x13	
140,00	150,00	12,50		TS/L 140/150x12,5	
140,00	160,00	15,00			TS/LA 140/160x15
140,00	165,00	19,00			TS/LA 140/165x19
143,00	151,00	14,00	TS 143/151x14		
145,00	153,00	9,00	TS 145/153x9		
146,00	156,00	11,00		TS/L 146/156x11	
147,00	155,00	11,00	TS 147/155x11		
160,00	185,00	19,00			TS/LA 160/185x19
163,00	178,00	13,00		TS/L 163/178x13	
170,00	180,00	11,00	TS 170/180x11	TS/L 170/180x11	
188,00	203,00	13,00		TS/L 188/203x13	
197,00	209,00	13,00		TS/L 197/209x13	
218,00	237,00	17,00		TS/L 218/237x17	
228,00	240,00	13,00		TS/L 228/240x13	
300,00	325,00	25,00		TS/L 300/325x25	

Figures in bold correspond to mounting spaces as per DIN ISO 5597.
Further sizes available on request.

Example for ordering Rod Seal:

TS 50 / 58 x 9

Type
Rod diameter d
Groove dameter D
Groove width

WARNING: Limits of application stated herein are standard values. They could be individually transgressed with due consideration to respective service conditions. In the event of a large duty cycle, pulsating operation and other complex operational conditions, simultaneous transgression of these values is not recommended. Due to a large variety of service conditions that may arise in course of actual use, the company does not take responsibility of or guarantee the functional accuracy of the individual components. Rights for changes are reserved.

Rod Seal
TTH

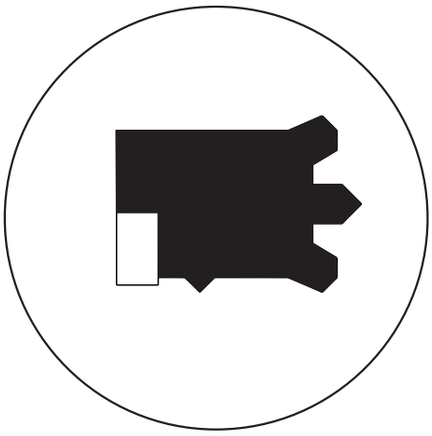

The robust seals of series TTH are designed for a versatile range of applications in mobile hydraulics and also for operating in heavy operational of cylinders.

The secondary lip on the dynamic surface of the rod seal is positioned in a specified area by design dept. just to give the very best performance.

Due to the extrusion gap of tubes ballooning that is caused by high dynamic pressure loads will be avoided by the intergrated back-up rings that are included in this seal.

Special Features:

- Higly wear- resistant modified Polyurethane material.
- Excellent scraper effect by compact profile form, also in low pressure areas.
- Exact positioning in assembly space thru optiamal no-wear behaviour
- Higher pre-stressing resulting in a very good sealing conditions also in static applications.
- Simple as a snap in assembly in closed grooves.
- Absolutly usable for heavy mobile hydraulic applications.
- Sizes for assembly spaces per as ISO 5597.

Material	: Polyurethan
Operational pressure	: to 50 MPa (500 bar)
Velocity	: reciprocating up to 0,5 m/s
Temperature	: -40 bup to +110 °C

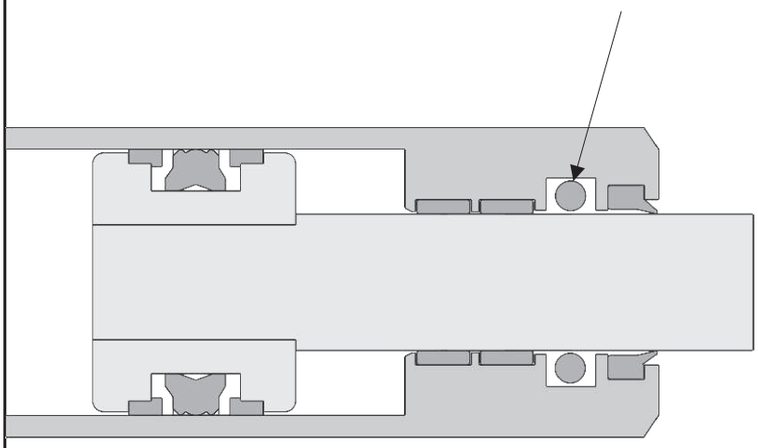

Rod Seal
TTH

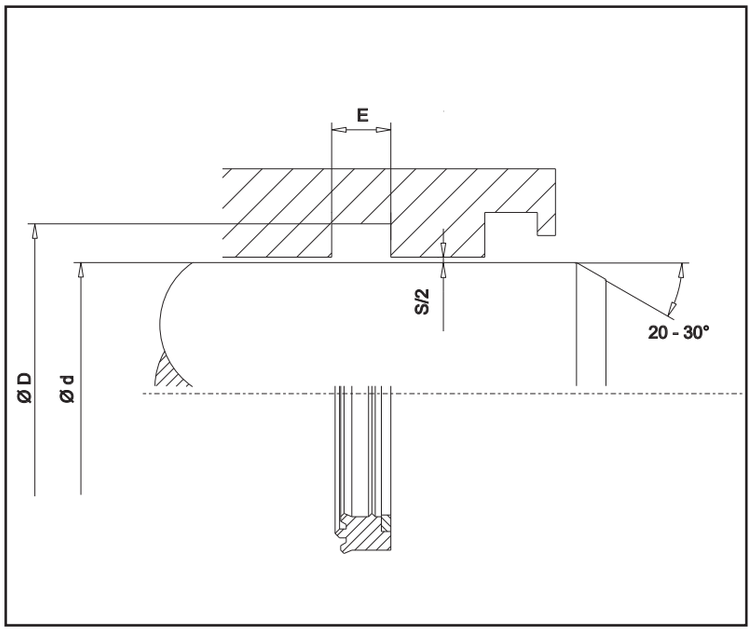

Limitations on Use

Operational pressure: to 50 MPa (500 bar)
Velocity : reciprocating up to 0.5 m/s
Temperature : -40 up to +110 °C

Media of Use

Mineral oil based hydraulic oils, non-polluting pressure fluids (Bio Oils) on request.

Surface Finish

Surface	Rz	Ra
Rod diameter d	2,0 µm	0,3 µm
Groove diameter D	6,3 µm	1,6 µm
Groove flank	10,0 µm	3,2 µm

Diameter Clearance

Maximal. Diameter Clear.	Maximal Pressure [bar]			
D	250	320	400	500
≤80	1,2	1,1	0,9	0,7
>80	1,3	1,2	1,2	0,8

d f8/h9	D H10	E +0,2	Part N°		
32,00	42,00	8,00	TTH 32/42x8		
40,00	**50,00**	**8,00**	**TTH 40/50x8**		
45,00	**55,00**	**8,00**	**TTH 45/55x8**		
50,00	**65,00**	**12,50**	**TTH 50/65x12,5**		
56,00	**71,00**	**12,50**	**TTH 56/71x12,5**		
56,00	66,00	10,00	TTH 56/66x10		
60,00	75,00	13,00	TTH 60/75x13		
63,00	78,00	6,30	TTH 63/78x6,3		
63,00	**78,00**	**12,50**	**TTH 63/78x12,5**		
65,00	80,00	13,00	TTH 65/80x13		
70,00	85,00	12,50	TTH 70/85x12,5		
75,00	90,50	6,30	TTH 75/90,5x6,3		
75,00	90,00	13,00	TTH 75/90x13		
80,00	95,00	6,30	TTH 80/95x6,3		
80,00	95,00	12,50	TTH 80/95x12,5		
82,55	98,20	13,00	TTH 82,5/98,2x13		
85,00	100,50	6,30	TTH 85/100,5x6,3		
85,00	100,00	13,00	TTH 85/100x13		
90,00	105,00	6,30	TTH 90/105x6,3		
90,00	105,00	13,00	TTH 90/105x13		
90,00	105,00	12,50	TTH 90/10x12,5		
95,00	110,00	13,00	TTH 95/110x13		
100,00	**120,00**	**16,00**	**TTH 100/120x16**		
106,00	121,50	6,30	TTH 106/121,5x6,3		
110,00	**130,00**	**16,00**	**TTH 110/130x16**		
115,00	130,00	13,00	TTH 115/130x13		
117,00	132,00	10,00	TTH 117/132x10		
120,00	135,00	16,00	TTH 120/135x16		
125,00	140,50	6,30	TTH 125x140,5x6,3		
125,00	**145,00**	**16,00**	**TTH 125/145x16**		
130,00	150,60	7,90	TTH 130/150,6x7,9		
140,00	**160,00**	**16,00**	**TTH 140/160x16**		

Example for ordering Rod Seal:

TTH 40 / 50 x 8N

Type
Rod diameter d
Groove diameter D
Groove width
Material

WARNING: Limits of application stated herein are standard values. They could be individually transgressed with due consideration to respective service conditions. In the event of a large duty cycle, pulsating operation and other complex operational conditions, simultaneous transgression of these values is not recommended. Due to a large variety of service conditions that may arise in course of actual use, the company does not take responsibility of or guarantee the functional accuracy of the individual components. Rights for changes are reserved.

Rod Seal
AF-441

Single acting rod seals from the AF-441 series can be used for most hydraulic applications. Different material combinations guarantee high functional security and long life over the entire pressure and velocity range, gives low friction, and takes into account various temperatures and pressure fluids.

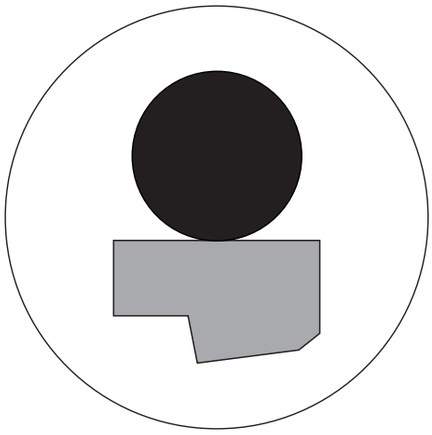

Special Features:

- Two part composition comprising of profile slide ring and O-ring
- Outstanding shear characteristics, no stick-slip effect
- Good dynamic and static sealing
- Good abrasion resistance, long life
- Wide temperature range and chemical resistance, depending on O-ring material
- Designed for mounting in undivided grooves, depending of size
- Available for all rod diameters up to 2500 mm

Material	: PTFE-Compound or polyurethane
Operating pressure	: up to 40 MPa (400 bar)
Velocity	: reciprocating to 15 m/s
Temperature	: -40 to +200 °C

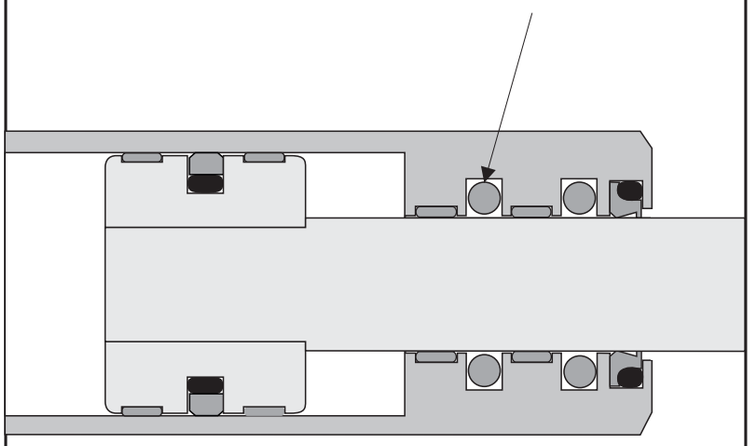

Rod Seal
AF-441

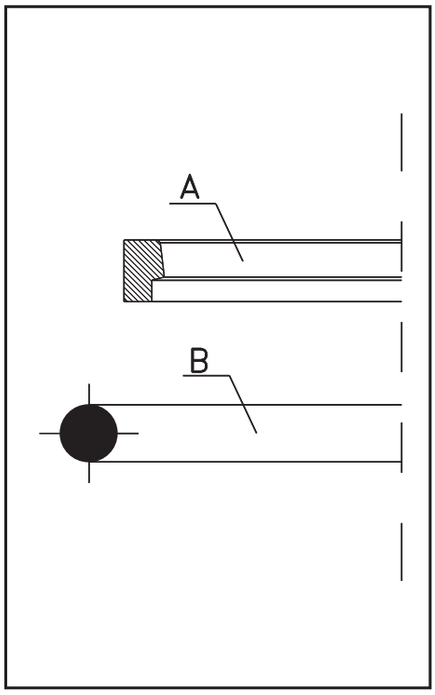

Slide Ring (Part A)

Slide ring part is rectangular and is provided with a stepped sealing edge on the pressure side. On the opposite side, the profile travels under a flat wedge. This special form of sealing profile helps to achieve a recovery effect. This means that the persistent oil film present on the piston rod during motion is conveyed back to the surge chamber in the course of the in-movement.

Profile gaskets are manufactured from PTFE materials. Compound AF-5640 is the standard material of construction (MOC) that is used in hydraulics applications. This material is particularity superior in respect of very high abrasion resistance, inherent stability, very good shearing characteristics and very good thermal properties if the chemical resistance chooses another material.

O-Ring (Part B)

O-rings are standard sealing elements with circular cross section. Those used in the present application conform to the series of dimensions as per AS 568 A (American norms).

Standard MOC for hydraulics applications is NBR, which guarantees particularly good resistance to hydraulic fluids. For use with sliding ring is are O-rings with hardness of 70 Shore A to preferre.

Materials Overview:

AF-1012: Virgin PTFE - outstanding chemical resistance - used in chemical, foodindustry and pharmaceutical industry with light mechanical stress.
AF-1022: PTFE with additive - Very good chemical resistance, outstanding shear characteristics, special purpose and intermediate stress applications.
AF-4115: PTFE with Glass fibre/lubricant - high abrasion resistance and inherent stability, good chemical resistance, used in various areas of industry and intermediatestress hydraulic applications.
AF-2426: PTFE with Carbon - good abrasion resistance and inherent stability, good chemical resistance, used in water and water-oil emulsions with intermediate stress. Also designed for dry runs.
AF-5640: PTFE with Bronze/additive - high abrasion resistance and inherent stability, very good shear characteristics, good chemical resistance, used in intermediate to high stress hydraulics application.
AF-1111: PTFE with Econol - very high abrasion resistance and inherent stability, used in hydraulics and abrasive pressure fluid applications.
AF-8172: PUR - very high abrasion resistance and inherent stability, used primarily in intermediate stress hydraulics applications.

Rod seals AF-441 have been successfully used for many years in hydraulic cylinders. To optimize rod sealing, we recommend the incorporation of two AF-441 seals followed by a single dual wiper AF-485. This seal and wiper combination affords nearly leak-free rod sealing even with heavily loaded hydraulic cylinders in demanding environments.

The seal can be used in divided and undivided profile grooves; for use in an undivided groove, the slide ring must be carefully bent to a kidney shape. The ring is then further stretched apart through the chamfered piston rod.

Materials Overview: O-Ring

N: Acrylonitrile Butadiene Rubber - Used in general machine construction, hydraulics, pneumatics - Resistant to mineral oil based pressure fluids, HFA-, HFB- und HFC fluids and water.

F: Fluorine containing Rubbers - Used at high temperatures and aggressive surrounding media, resistant to mineral based and synthetic pressure fluids, aliphatic, aromatic and chlorated hydrocarbons, phosphate-ester based poorly inflammable fluids.

E: Ethylene Propylene Diene Rubbers - Used in armature and pump industry.Resistant to hot water, steam, phosphate-ester based poorly inflammable fluids but is not resistant to mineral oils.

S: Silicon Rubbers.

C: Chloroprene Rubbers.

Rod Seal
AF-441

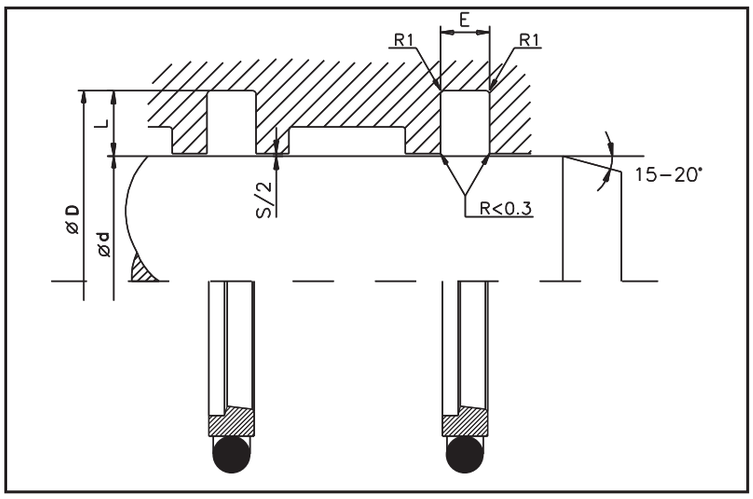

Limitations on Use

Operating pressure	:	up to 40 MPa (400 bar)
Velocity	:	reciprocating to 15 m/s
Temperature	:	-40 to +200 °C (depending on O-Ring material)

Media for Use

Mineral oil based hydraulic fluids, flame resistant fluids (HFA, HFB, HFC), non-polluting pressure fluids (Bio Oils), water, air and other media (depending on O-Ring material).

Surface Finish

Surfaces	Rmax	Rz	Ra
Rod diameter d	2,5 µm	1,6 µm	0,4 µm
Groove diameter	10,0 µm	6,3 µm	1,6 µm
Groove flanks	16,0 µm	10,0 µm	3,2 µm

Recommended Sizes for Installation

Section	O-Ring Cord-ø mm	Recommended Diameter Standard d mm	Groove Width E mm	Groove Depth L mm	Max. Diameter Clearance S 0 - 200 bar mm	Max. Diameter Clearance S 200 - 400 bar mm	Radius R1 max. mm
A	1,78	3 - 7,9	2,2	2,45	0,4 - 0,2	0,3 - 0,1	0,3
B	2,62	8 - 18,9	3,2	3,65	0,4 - 0,2	0,3 - 0,1	0,5
C	3,53	19 - 37,9	4,2	5,35	0,6 - 0,3	0,4 - 0,2	0,7
C	5,33	38 - 199,9	6,3	7,55	0,8 - 0,4	0,4 - 0,2	1,2
E	7,00	200 - 255,9	8,1	10,25	1,0 - 0,5	0,5 - 0,3	1,5
F	7,00	256 - 649,9	8,1	12,00	1,0 - 0,5	0,5 - 0,3	1,5
G	8,40						

d f8/h9	D H9	E +0,2	O-Ring	Part N°
3,00	7,90	2,20	008	AF-441-0030-A-5640N
4,00	8,90	2,20	010	AF-441-0040-A-5640N
5,00	9,90	2,20	011	AF-441-0050-A-5640N
6,00	10,90	2,20	011	AF-441-0060-A-5640N
7,00	11,90	2,20	012	AF-441-0070-A-5640N
8,00	12,90	2,20	012	AF-441-0080-A-5640N
8,00	15,30	3,20	011	AF-441-0080-B-5640N
10,00	14,90	2,20	013	AF-441-0100-A-5640N
10,00	17,30	3,20	113	AF-441-0100-B-5640N
12,00	16,90	2,20	015	AF-441-0120-A 5640N
12,00	19,30	3,20	114	AF-441-0120-B-5640N
14,00	18,90	2,20	016	AF-441-0140-A-5640N
14,00	21,30	3,20	115	AF-441-0140-B-5640N
15,00	19,90	2,20	016	AF-441-0150-A-5640N
15,00	22,30	3,20	116	AF-441-0150-B-5640N
16,00	20,90	2,20	017	AF-441-0160-A-5640N
16,00	23,30	3,20	116	AF-441-0160-B-5640N
18,00	22,90	2,20	018	AF-441-0180-A-5640N
18,00	25,30	3,20	118	AF-441-0180-B-5640N
20,00	27,30	3,20	118	AF-441-0200-B-5640N
20,00	30,70	4,20	214	AF-441-0200-C-5640N
22,00	29,30	3,20	120	AF-441-0220-B-5640N
22,00	32,70	4,20	215	AF-441-0220-C-5640N
25,00	32,30	3,20	122	AF-441-0250-B-5640N
25,00	35,70	4,20	217	AF-441-0250-C-5640N
28,00	35,30	3,20	124	AF-441-0280-B-5640N
28,00	38,70	4,20	219	AF-441-0280-C-5640N

d f8/h9	D H9	E +0,2	O-Ring	Part N°
30,00	37,30	3,20	125	AF-441-0300-B-5640N
30,00	40,70	4,20	220	AF-441-0300-C-5640N
32,00	39,30	3,20	126	AF-441-0320-B-5640N
32,00	42,70	4,20	221	AF-441-0320-C-5640N
35,00	42,30	3,20	128	AF-441-0350-B-5640N
35,00	45,70	4,20	222	AF-441-0350-C-5640N
36,00	43,30	3,20	129	AF-441-0360-B-5640N
36,00	46,70	4,20	223	AF-441-0360-C-5640N
38,00	48,70	4,20	224	AF-441-0380-C-5640N
38,00	53,10	6,30	327	AF-441-0380-D-5640N
40,00	50,70	4,20	224	AF-441-0400-C-5640N
40,00	55,10	6,30	328	AF-441-0400-D-5640N
42,00	52,70	4,20	225	AF-441-0420-C-5640N
42,00	57,10	6,30	328	AF-441-0420-D-5640N
45,00	55,70	4,20	226	AF-441-0450-C-5640N
45,00	60,10	6,30	329	AF-441-0450-D-5640N
48,00	58,70	4,20	226	AF-441-0480-C-5640N
48,00	63,10	6,30	330	AF-441-0480-D-5640N
50,00	60,70	4,20	227	AF-441-0500-C-5640N
50,00	65,10	6,30	331	AF-441-0500-D-5640N
52,00	62,70	4,20	228	AF-441-0520-C-5640N
52,00	67,10	6,30	331	AF-441-0520-D-5640N
55,00	65,70	4,20	229	AF-441-0550-C-5640N
55,00	70,10	6,30	333	AF-441-0550-D-5640N
56,00	66,70	4,20	229	AF-441-0560-C-5640N
56,00	71,10	6,30	333	AF-441-0560-D-5640N
60,00	70,70	4,20	230	AF-441-0600-C-5640N

Rod Seal
AF-441

d f8/h9	D H9	E +0,2	O-Ring	Part N°
60,00	75,10	6,30	334	AF-441-0600-D-5640N
63,00	73,70	4,20	231	AF-441-0630-C-5640N
63,00	78,10	6,30	335	AF-441-0630-D-5640N
65,00	80,10	6,30	336	AF-441-0650-D-5640N
70,00	85,10	6,30	337	AF-441-0700-D-5640N
75,00	90,10	6,30	339	AF-441-0750-D-5640N
80,00	95,10	6,30	340	AF-441-0800-D-5640N
85,00	100,10	6,30	342	AF-441-0850-D-5640N
90,00	105,10	6,30	343	AF-441-0900-D-5640N
95,00	110,10	6,30	345	AF-441-0950-D-5640N
100,00	115,10	6,30	347	AF-441-1000-D-5640N
105,00	120,10	6,30	348	AF-441-1050-D-5640N
110,00	125,10	6,30	350	AF-441-1100-D-5640N
115,00	130,10	6,30	351	AF-441-1150-D-5640N
120,00	135,10	6,30	353	AF-441-1200-D-5640N
125,00	140,10	6,30	355	AF-441-1250-D-5640N
130,00	145,10	6,30	356	AF-441-1300-D-5640N
135,00	150,10	6,30	358	AF-441-1350-D-5640N
140,00	155,10	6,30	359	AF-441-1400-D-5640N
150,00	165,10	6,30	362	AF-441-1500-D-5640N
160,00	175,10	6,30	363	AF-441-1600-D-5640N
160,00	180,50	8,10	439	AF-441-1600-E-55N
170,00	185,10	6,30	365	AF-441-1700-D-5640N
180,00	195,10	6,30	366	AF-441-1800-D-5640N
180,00	200,50	8,10	442	AF-441-1800-E-55N
190,00	205,10	6,30	368	AF-441-1900-D-5640N
200,00	220,50	8,10	445	AF-441-2000-E-55N
210,00	230,50	8,10	446	AF-441-2100-E-55N
220,00	240,50	8,10	447	AF-441-2200-E-55N
230,00	250,50	8,10	448	AF-441-2300-E-55N
240,00	260,50	8,10	449	AF-441-2400-E-55N
250,00	270,50	8,10	449	AF-441-2500-E-55N
260,00	284,00	8,10	450	AF-441-2600-F-55N
270,00	294,00	8,10	451	AF-441-2700-F-55N
280,00	304,00	8,10	452	AF-441-2800-F-55N
290,00	314,00	8,10	453	AF-441-2900-F-55N

d f8/h9	D H9	E +0,2	O-Ring	Part N°
300,00	324,00	8,10	454	AF-441-3000-F-5640N
310,00	334,00	8,10	454	AF-441-3100-F-5640N
320,00	344,00	8,10	455	AF-441-3200-F-5640N
330,00	354,00	8,10	456	AF-441-3300-F-5640N
340,00	364,00	8,10	457	AF-441-3400-F-5640N
350,00	374,00	8,10	458	AF-441-3500-F-5640N
360,00	384,00	8,10	458	AF-441-3600-F-5640N
370,00	394,00	8,10	459	AF-441-3700-F-5640N
380,00	404,00	8,10	460	AF-441-3800-F-5640N
390,00	414,00	8,10	461	AF-441-3900-F-5640N
400,00	424,00	8,10	461	AF-441-4000-F-5640N
410,00	434,00	8,10	462	AF-441-4100-F-5640N
420,00	444,00	8,10	463	AF-441-4200-F-5640N
430,00	454,00	8,10	464	AF-441-4300-F-5640N
440,00	464,00	8,10	464	AF-441-4400-F-5640N
450,00	474,00	8,10	465	AF-441-4500-F-5640N
460,00	484,00	8,10	466	AF-441-4600-F-5640N
470,00	494,00	8,10	467	AF-441-4700-F-5640N
480,00	504,00	8,10	468	AF-441-4800-F-5640N
490,00	514,00	8,10	469	AF-441-4900-F-5640N
500,00	524,00	8,10	469	AF-441-5000-F-5640N
510,00	534,00	8,10	469	AF-441-5100-F-5640N
520,00	544,00	8,10	470	AF-441-5200-F-5640N
530,00	554,00	8,10	470	AF-441-5300-F-5640N
540,00	564,00	8,10	471	AF-441-5400-F-5640N
550,00	574,00	8,10	471	AF-441-5500-F-5640N
560,00	584,00	8,10	471	AF-441-5600-F-5640N
570,00	594,00	8,10	472	AF-441-5700-F-5640N
580,00	604,00	8,10	472	AF-441-5800-F-5640N
590,00	614,00	8,10	473	AF-441-5900-F-5640N
600,00	624,00	8,10	473	AF-441-6000-F-5640N
610,00	634,00	8,10	473	AF-441-6100-F-5640N
620,00	644,00	8,10	474	AF-441-6200-F-5640N
630,00	654,00	8,10	474	AF-441-6300-F-5640N
640,00	664,00	8,10	475	AF-441-6400-F-5640N

Further sizes up to Ø 2500 mm available on request.
Dimensions in bold correspond to mounting spaces as per DIN ISO 7425/2.

Example for ordering Rod Seal:

AF-441-0360 - B - 5640N

- Type
- Nominal diameter x 10
- Cross-section
- Standard material slide ring
- Standard material O-Ring

Material Key:

Dynamic slide ring
AF-1012 - Virgin PTFE
AF-1022 - PTFE with additive
AF-1024 - PTFE with additive (FDA)
AF-4115 - PTFE with glass fibre
AF-2426 - PFTE with carbon
AF-5640 - PTFE with bronze/additive
AF-1111 - PTFE with Econol
AF-8172 - PUR
AF-7710 - UHMW-PE (PEHD) (FDA)

O-Ring
N -NBR
F - FPM
E - EPDM
S - Silicone
C - Chloropren

WARNING: Limits of application stated herein are standard values. They could be individually transgressed with due consideration to respective service conditions. In the event of a large duty cycle, pulsating operation and other complex operational conditions, simultaneous transgression of these values is not recommended. Due to a large variety of service conditions that may arise in course of actual use, the company does not take responsibility of or guarantee the functional accuracy of the individual components. Rights for changes are reserved.

Double Acting Rod Seal
AF-411

Double acting rod seals of the AF-411 series can be used in all hydraulics applications. Different material combinations guarantee high functional reliability and long life over the entire pressure and velocity range at low friction taking into account various temperatures and pressure of fluids.

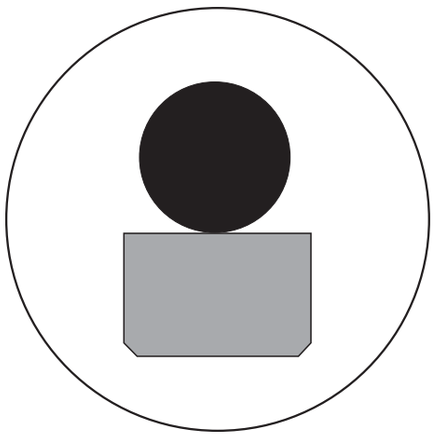

Material : PTFE-Compound
Operating pressure: up to 40 MPa (400 bar)
Velocity : reciprocating to 15 m/s
Temperature : -40 to +200 °C

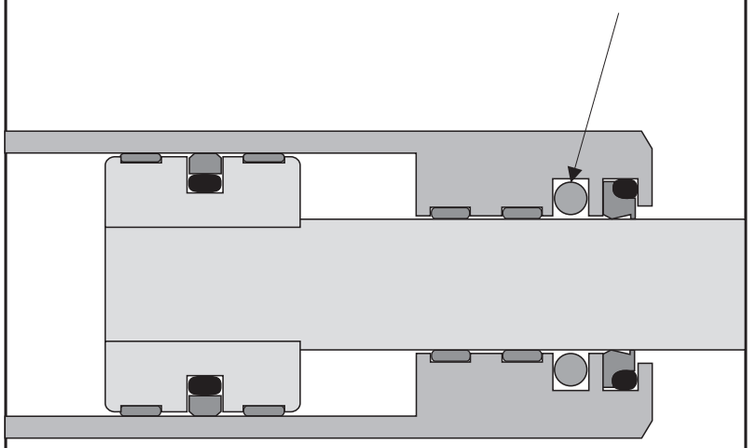

Special Features:

- Two part composition comprising of profile gasket and O-ring
- Outstanding shear characteristics, no stick-slip effect
- Good dynamic and static sealing
- Good abrasion resistance, long life
- Wide temperature range and chemical resistance depending on choice of O-ring material
- Suitable for mounting into undivided grooves
- Available for all rod diameters up to approx. 2500 mm.

Double Acting Rod Seal
AF-411

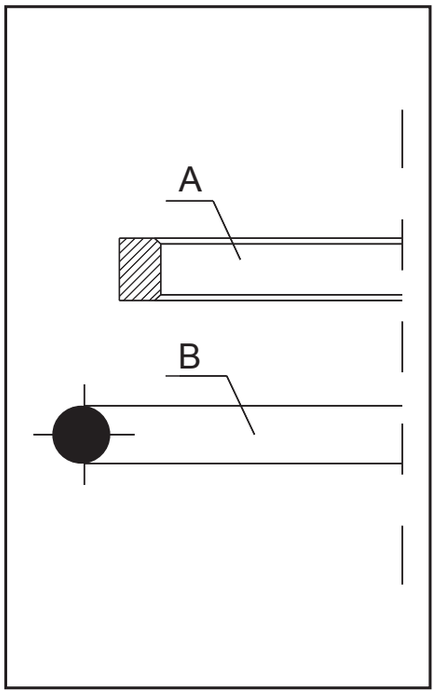

Slide Ring (Part A)

Slide ring section is rectangular and is provided with a chamfer on the dynamic side so as to simplify mounting.Slide rings are manufactured from specially modified PTFE materials. Compound 5640 is the standard material of construction (MOC) that is used in hydraulics applications. This material is particularly superior in respect of very high abrasion resistance, inherent stability, very good shearing characteristics and very good thermal and chemical resistance.

O-Ring (Part B)

O-rings are standard sealing elements with circular cross section. Those used in the present application conform to the series of dimensions as per AS 568 A (American standards). Standard MOC for hydraulics applications is NBR (Acrylonitrile Butadiene Rubber) which guarantees particularly good resistance to hydraulic fluids.

For use with profile gaskets O-rings with hardness of 70 Shore A are preferred.

Materials Overview:

AF-1012: Virgin PTFE - outstanding chemical resistance - used in chemical, foodindustry and pharmaceutical industry with light mechanical stress.
AF-1022: PTFE with additive - Very good chemical resistance, outstanding shear characteristics, special purpose and intermediate stress applications.
AF-4115: PTFE with Glass fibre/lubricant - high abrasion resistance and inherent stability, good chemical resistance, used in various areas of industry and intermediatestress hydraulic applications.
AF-2426: PTFE with Carbon - good abrasion resistance and inherent stability, good chemical resistance, used in water and water-oil emulsions with intermediate stress. Also designed for dry runs.
AF-5640: PTFE with Bronze/additive - high abrasion resistance and inherent stability, very good shear characteristics, good chemical resistance, used in intermediate to high stress hydraulics application.
AF-1111: PTFE with Econol - very high abrasion resistance and inherent stability, used in hydraulics and abrasive pressure fluid applications.
AF-8172: PUR - very high abrasion resistance and inherent stability, used primarily in intermediate stress hydraulics applications.

The AF-411 rod seal has been used for many years in hydraulic cylinders. It can be used for unilateral or variable pressure application on the rod.

The seal can be mounted in divided and undivided grooves (from ø 30 mm onwards). For use in an undivided groove, the profile ring must be carefully bent to a kidney shape. The ring is then further stretched apart through the chamfered piston rod.

Materials Overview: O-Ring

N: Acrylonitrile-Butadiene-Rubber - Used in general machine construction, hydraulics, pneumatics. Resistant to mineral oil based pressure fluids, HFA, HFB and HFC fluids and water.

F: Fluorine containing Rubbers - Used at high temperatures and aggressive surrounding media, resistant to mineral based and synthetic pressure fluids, aliphatic, aromatic and chlorated hydrocarbons, phosphate-ester based poorly inflammable fluids.

E: Ethylene Propylene Diene Rubbers - Used in armature and pump industry. Resistant to hot water, steam, phosphate-ester based poorly inflammable fluids but is not resistant to mineral oils!

S: Silicon Rubbers.

C: Chloroprene Rubbers.

Double Acting Rod Seal
AF-411

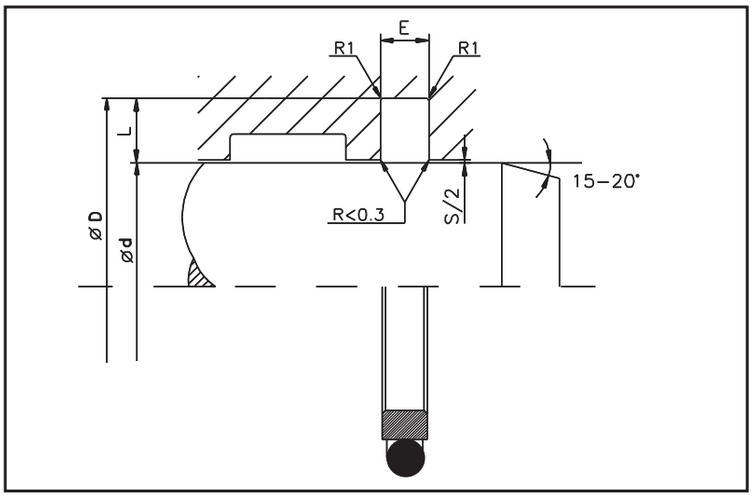

Limitations on Use

Operating pressure	:	up to 40 MPa (400 bar)
Velocity	:	reciprocating to 15 m/s
Temperature	:	-40 to +200 °C (depending on O-Ring material)

Media for Use

Mineral oil based pressure fluids, flame resistant fluids (HFA, HFB, HFC), non-polluting pressure fluids (Bio Oils), water, air and other media (depending on O-ring material).

Surface Finish

Surfaces	Rmax	Rz	Ra
Rod diameter d	2,5 µm	1,6 µm	0,4 µm
Groove diameter D	10,0 µm	6,3 µm	1,6 µm
Groove flanks	16,0 µm	10,0 µm	3,2 µm

Recommended Sizes for Installation

Section	O-Ring Cord-ø mm	Recommended Diameter Standard d mm	Groove Width E mm	Groove Depth L mm	Max. Diameter Clearance S 0 - 200 bar mm	Max. Diameter Clearance S 200 - 400 bar mm	Radius R1 max. mm
A	1,78	3 - 7,9	2,2	2,45	0,4 - 0,2	0,3 - 0,1	0,3
B	2,62	8 - 18,9	3,2	3,65	0,4 - 0,2	0,3 - 0,1	0,5
C	3,53	19 - 37,9	4,2	5,35	0,6 - 0,3	0,4 - 0,2	0,7
D	5,33	38 -199,9	6,3	7,55	0,8 - 0,4	0,4 - 0,2	1,2
E	7,00	200 -255,9	8,1	10,25	1,0 - 0,5	0,5 - 0,3	1,5
F	7,00	256 -649,9	8,1	12,00	1,0 - 0,5	0,5 - 0,3	1,5
G	8,40	650 -	9,5	13,65			

d f8/h9	D H 9	E +0,2	O-Ring	Part N°
4,00	8,90	2,20	010	AF-411-0040-A-5640N
5,00	9,90	2,20	011	AF-411-0050-A-5640N
6,00	10,90	2,20	011	AF-411-0060-A-5640N
7,00	11,90	2,20	012	AF-411-0070-A-5640N
8,00	12,90	2,20	012	AF-411-0080-A-5640N
8,00	15,30	3,20	111	AF-411-0080-B-5640N
10,00	14,90	2,20	014	AF-411-0100-A-5640N
10,00	17,30	3,20	113	AF-411-0100-B-5640N
12,00	16,90	2,20	015	AF-411-0120-A-5640N
12,00	19,30	3,20	114	AF-411-0120-B-5640N
14,00	18,90	2,20	016	AF-411-0140-A-5640N
14,00	21,30	3,20	115	AF-411-0140-B-5640N
15,00	22,30	3,20	115	AF-411-0150-B-5640N
16,00	20,90	2,20	017	AF-411-0160-A-5640N
16,00	23,30	3,20	116	AF-411-0160-B-5640N
18,00	22,90	2,20	019	AF-411-0180-A-5640N
18,00	25,30	3,20	118	AF-411-0180-B-5640N
20,00	27,30	3,20	119	AF-411-0200-B-5640N
20,00	30,70	4,20	214	AF-411-0200-C-5640N
22,00	29,30	3,20	120	AF-411-0220-B-5640N
22,00	32,70	4,20	215	AF-411-0220-C-5640N
25,00	32,20	3,20	122	AF-411-0250-B-5640N
25,00	35,70	4,20	217	AF-411-0250-C-5640N
28,00	38,70	4,20	219	AF-411-0280-C-5640N
30,00	37,30	3,20	125	AF-411-0300-B-5640N
30,00	40,70	4,20	220	AF-411-0300-C-5640N
32,00	39,30	3,20	126	AF-411-0320-B-5640N
32,00	42,70	4,20	221	AF-411-0320-C-5640N

d f8/h9	D H 9	E +0,2	O-Ring	Part N°
35,00	45,70	4,20	222	AF-411-0350-C-5640N
36,00	43,30	3,20	129	AF-411-0360-B-5640N
36,00	46,70	4,20	223	AF-411-0360-C-5640N
40,00	50,70	4,20	224	AF-411-0400-C-5640N
40,00	55,10	6,30	328	AF-411-0400-D-5640N
45,00	55,70	4,20	226	AF-411-0450-C-5640N
45,00	60,10	6,30	329	AF-411-0450-D-5640N
50,00	60,70	4,20	227	AF-411-0500-C-5640N
50,00	65,10	6,30	331	AF-411-0500-D-5640N
56,00	66,70	4,20	229	AF-411-0560-C-5640N
56,00	71,10	6,30	333	AF-411-0560-D-5640N
60,00	70,70	4,20	230	AF-411-0600-C-5640N
60,00	75,10	6,30	334	AF-411-0600-C-5640N
63,00	73,70	4,20	842	AF-411-0630-C-5640N
63,00	78,10	6,30	335	AF-411-0630-D-5640N
65,00	80,10	6,30	336	AF-411-0650-D-5640N
70,00	85,10	6,30	337	AF-411-0700-D-5640N
75,00	90,10	6,30	339	AF-411-0750-D-5640N
80,00	95,10	6,30	340	AF-411-0800-D-5640N
85,00	100,10	6,30	342	AF-411-0850-D-5640N
90,00	105,10	6,30	343	AF-411-0900-D-5640N
95,00	110,10	6,30	345	AF-411-0950-D-5640N
100,00	115,10	6,30	347	AF-411-1000-D-5640N
105,00	120,10	6,30	348	AF-411-1050-D-5640N
110,00	125,10	6,30	350	AF-411-1100-D-5640N
115,00	130,10	6,30	351	AF-411-1150-D-5640N
120,00	135,10	6,30	353	AF-411-1200-D-5640N
125,00	140,10	6,30	355	AF-411-1250-D-5640N

Double Acting Rod Seal
AF-411

d f8/h9	D H 9	E +0,2	O-Ring	Part N°
130,00	145,10	6,30	356	AF-411-1300-D-5640N
135,00	150,10	6,30	358	AF-411-1350-D-5640N
140,00	155,10	6,30	359	AF-411-1400-D-5640N
150,00	165,10	6,30	362	AF-411-1500-D-5640N
160,00	175,10	6,30	363	AF-411-1600-D-5640N
160,00	180,50	8,10	440	AF-411-1600-E-5640N
170,00	185,10	6,30	365	AF-411-1700-D-5640N
180,00	195,10	6,30	366	AF-411-1800-D-5640N
180,00	200,50	8,10	443	AF-411-1800-E-5640N
190,00	205,10	6,30	368	AF-411-1900-D-5640N
200,00	220,50	8,10	445	AF-411-2000-E-5640N
210,00	230,50	8,10	446	AF-411-2100-E-5640N
220,00	240,50	8,10	447	AF-411-2200-E-5640N
230,00	250,50	8,10	448	AF-411-2300-E-5640N
240,00	260,50	8,10	449	AF-411-2400-E-5640N
250,00	270,50	8,10	449	AF-411-2500-E-5640N
260,00	284,00	8,10	450	AF-411-2600-F-5640N
270,00	294,00	8,10	451	AF-411-2700-F-5640N
280,00	304,00	8,10	452	AF-411-2800-F-5640N
290,00	314,00	8,10	453	AF-411-2900-F-5640N
300,00	324,00	8,10	454	AF-411-3000-F-5640N

d f8/h9	D H 9	E +0,2	O-Ring	Part N°
310,00	334,00	8,10	454	AF-411-3100-F-5640N
320,00	344,00	8,10	455	AF-411-3200-F-5640N
330,00	354,00	8,10	456	AF-411-3300-F-5640N
340,00	364,00	8,10	457	AF-411-3400-F-5640N
350,00	374,00	8,10	458	AF-411-3500-F-5640N
360,00	384,00	8,10	458	AF-411-3600-F-5640N
370,00	394,00	8,10	459	AF-411-3700-F-5640N
380,00	404,00	8,10	460	AF-411-3800-F-5640N
390,00	414,00	8,10	461	AF-411-3900-F-5640N
400,00	424,00	8,10	461	AF-411-4000-F-5640N
410,00	434,00	8,10	462	AF-411-4100-F-5640N
420,00	444,00	8,10	463	AF-411-4200-F-5640N
430,00	454,00	8,10	464	AF-411-4300-F-5640N
440,00	464,00	8,10	464	AF-411-4400-F-5640N
450,00	474,00	8,10	465	AF-411-4500-F-5640N
460,00	484,00	8,10	466	AF-411-4600-F-5640N
470,00	494,00	8,10	467	AF-411-4700-F-5640N
480,00	504,00	8,10	468	AF-411-4800-F-5640N
490,00	514,00	8,10	469	AF-411-4900-F-5640N
500,00	524,00	8,10	469	AF-411-5000-F-5640N

Further sizes up to Ø 2500 mm available on request.
Dimensions in bold correspond to mounting spaces as per DIN ISO 7425/2.

Example for ordering Rod Seal:

AF-411- 0360 - B - 5640N

- Type
- Nominal diameter x 10
- Cross-section
- Standard material Slide ring
- Standard material O-Ring

Material Key:

Dynamic slide ring
AF-1012 - Virgin PTFE
AF-1022 - PTFE with additive
AF-1024 - PTFE with additive (FDA)
AF-2426 - PFTE with carbon
AF-2413 - PFTE with carbonfiber
AF-5640 - PTFE with bronze/additive
AF-1111 - PTFE with Econol

O-Ring
N -NBR
F - FPM
E - EPDM
S - Silicone
C - Chloropren

WARNING: Limits of application stated herein are standard values. They could be individually transgressed with due consideration to respective service conditions. In the event of a large duty cycle, pulsating operation and other complex operational conditions, simultaneous transgression of these values is not recommended. Due to a large variety of service conditions that may arise in course of actual use, the company does not take responsibility of or guarantee the functional accuracy of the individual components. Rights for changes are reserved.

Accofluor spring activated lip seal

ASL-Seals

Type ASL-seal is a single-acting, spring activated PTFE seal for both piston and rod. ASL-seals are appropriate for use as a dynamic seal for slowly rotating or reciprocating movements as well as a shaft seal or static seal. The series often replaces a rubber seal, e.g. an O-ring in applications with high or low temperatures, non-lubricated services, demands on low friction, aggressive media, high speeds, high pressures, vacuum etc.

Type ASL-seals can be delivered with many different spring types and materials adjusted to the application demands and so can the PTFE material.

The advantages of series ASL-Seals are e.g.:

- high chemical resistance
- withstands speeds up to 15 m/s
- wide temperature range, –254°C – +310°C (depending on the choice of material)
- withstands pressures up to 40 MPa (standard), higher pressures demand special design
- FDA quality

Accofluor ASL-Seals are designated according to a system that states the seal series/type, dynamic seal diameter, cross-section and choice of material.

AF-610D-0300 -C -1111VSQ

- Seal /type
- Rod diameter x 10
- Cross-section
- Material code (body)
- Material code (type of spring)
- Silicone filled

Material Key:

AF-1012 - Virgin PTFE
AF-1022 - PTFE with additive
AF-4025 - PTFE with glass fibre
AF-2413 - PFTE with carbon fiber
AF-2426 - PFTE with carbon
AF-5640 - PTFE with bronze/additive
AF-1111 - PTFE with Econol

*)Please see page 137 for different spring types.

All types can be delivered with a special design regarding groove dimensions and material properties in order to obtain optimal solution.

Installation of ASL- SEALS

ASL-seals can be installed in O-ring grooves according to AS 568 and BS 1806. PTFE seals are not as elastic as e.g. O-rings of elastomers and should therefore be installed in open grooves. For large diameters or small cross sections, installations in closed or half-closed grooves are possible.

AF-610R

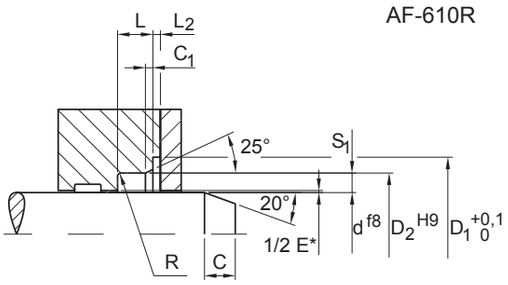

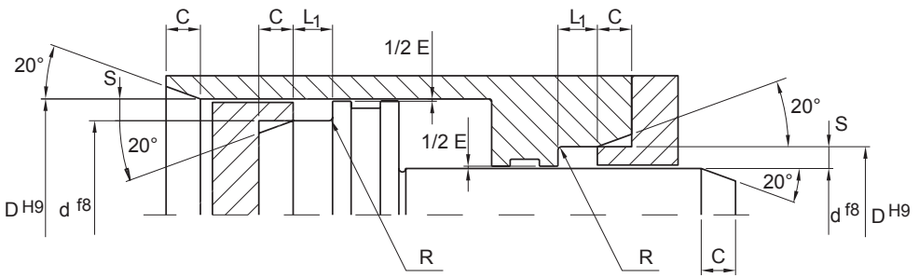

Recomended size range	Cross-section		Groove width		L_2	C_1	With guide ring E*)			C	R max	D_1
	S	S_1	L +0,25 0	L1 +0,25 0			0-10 MPa*)	10-25 MPa*)	25-40 MPa*)			
6-13,9	A 1,45	A 1,45	2,4	3,8	0,8	0,45	0,4	0,3	0,2	3,4	3,4	
14-24,9	B 2,25	B 2,5	3,6	4,65	0,9	0,85	0,5	0,4	0,3	4,2	4,2	d + 9 + 0,2 0
25-45,9	C 3,1	C 3,5	4,8	5,7	1,3	1,35	0,5	0,4	0,3	5,8	5,8	d + 12,5 + 0,2 0
46-124,9	D 4,7	D 5,25	7,1	8,5	1,8	1,8	0,6	0,5	0,4	7,4	7,4	d + 17,5 + 0,3 0
125-	E 6,1	E 7,0	9,5	11,2	2,3	2,8	0,8	0,6	0,5	8,4	8,4	d + 22,5 + 0,3 0

*) Not valid for AF-610R, please contact Accofluor technical department. If the clearance ½ E is < 0,25 mm, a guide ring should not be used.

Spring activated lip seal
Axial ASL-Seals

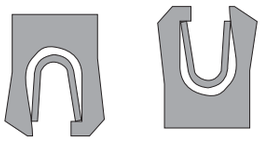

Axial installation of AF-611/711 ASL-Seals

Inside pressure

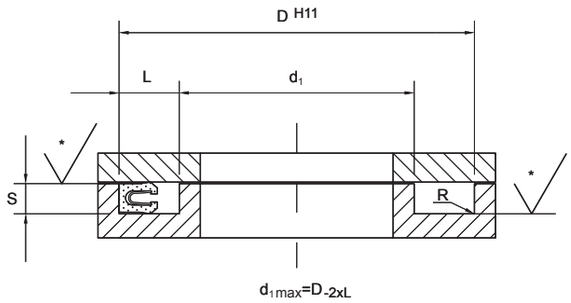

Outside pressure and inside vaccum

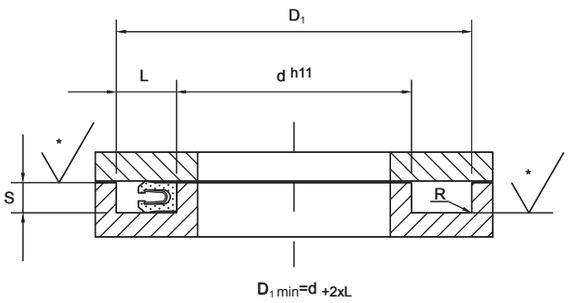

Please see schedule for recommendations regarding surface roughness value for each type of media and movement

Axial seal code	Axial dimension S +0,05	Radial cross-section of groove $L_{min.}$	R_{max}	D_1 +0,2 / 0	d_1 0 / -0,2
A	1,45	2,4	0,2	d + 2 x L	D - 2 x L
B	2,25	3,6	0,4	d + 2 x L	D - 2 x L
C	3,10	4,8	0,6	d + 2 x L	D - 2 x L
D	4,70	7,1	0,8	d + 2 x L	D - 2 x L
E	6,10	9,5	0,8	d + 2 x L	D - 2 x L

Hardware design, Open and closed grooves

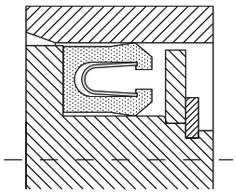

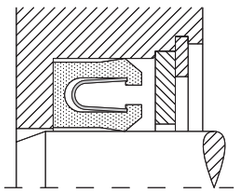

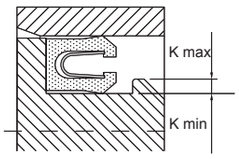

Kmax=dx0,05

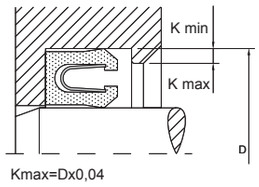

Kmax=Dx0,04

Cross-section	S	K_{min}
A	1,45	0,35
B	2,25	0,55
C	3,10	0,75
D	4,70	0,80
E	6,10	0,90

Type of springs for ASL- SEALS

Spring type	Spring force	Spring material	Spring code
Slant coil spring 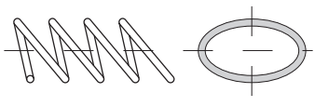	Low	S Stainless steel 301	SS
		E Elgiloy	SE
		H Hastelloy C276	SH
V spring (basic design) 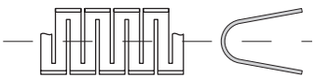	Medium	S Stainless steel 301	VS
		E Elgiloy	VE
		H Hastelloy C276	VH
Helical band spring	High	S Stainless steel 301	HS
		E Elgiloy	HE
		H Hastelloy C276	HH

SPRING TYPES

Code Application field

S Less aggressive media
E Aggressive media
H Aggressive media and very high temperatures
SS Applications with low friction
VS Standard applications
HS Static applications and low temperature

Surface roughness value– ASL-Seals

Medium	Recommended surface roughness value		
	Reciprocating Movements	Rotating	Static
Low molecular gases Media with low surface tension Low temperature Hydrogen, helium, freon, nitrogen	R_a 0,2 µm	R_a 0,2 µm	R_a 0,3 µm
Low viscosity fluids and gases	R_a 0,3 µm	R_a 0,2 µm	R_a 0,6 µm
Medium to low viscosity fluids Hydraulic fluids, water, skydrol Transmission oil	R_a 0,4 µm	R_a 0,2 µm	R_a 0,8 µm

Spring activated lip seal

Rod/piston ASL-Seals

1) All designs can be delivered with a Helical or slant coil spring. See page 78 for different spring types.
2) The silicone we use is FDA approved.

ASL-Seal

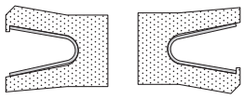

AF-610A AF-710A

Rod/piston, asymmetric with a wiper lip

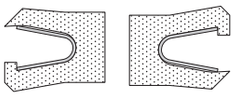

AF-610D AF-710D

Rod/piston ,asymmetric with a strong dynamic lip

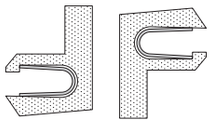

AF-610R AF-710R

Rod/piston shaft seal with a flange and a strong dynamic lip

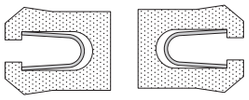

AF-610S AF-710S

Rod/piston,symmetrical for static applications

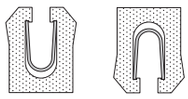

AF-711S AF-611S

Seal for outside/inside pressure could be made in all above variants,

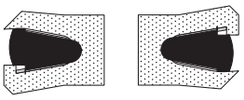

AF-610D...VSQ A F 710D...VSQ

Rod/piston, asymmetric with a strong dynamic lip,silicone filled could be made in all above variants,

Proposed application for ASL-Seals

Type	Seal number	Type of installation	Static*)	Reciprocating*)	Rotating*)
	AF-710A	Piston	2	1	3
	AF-610A	Rod	2	1	3
	AF-710D	Piston	3	1	2
	AF-610D	Rod	3	1	2
	AF-610R	Rod	3	2	1
	AF-710S/AF-610S	Piston/Rod	1	2	3
	AF-611	Flange seal sealing from inside	1	-	2
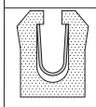	AF-711	Flange seal sealing from outside	1	-	2
	AF-611-XXXX-X	Rod special design	1	1	1

*) 1 = Excellent 2 = Acceptable 3 = Less appropriate

Special ASL-Seals

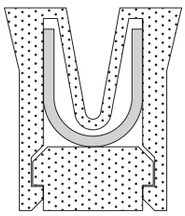

Sanitary seal

The sanitary seal spring is PTFE encapsulated which makes the seal easy to clean. This type of seal is therefore suitable for the food industry.

High pressure seal

Standard seal series with two back-up rings for reciprocating movements.

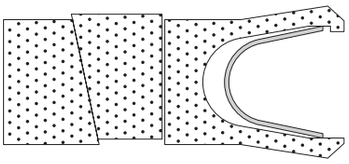

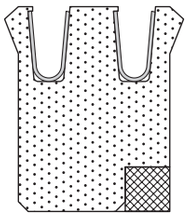

High pressure seal

This SU seal has an integrated back-up ring in order to withstand high pressures. The seal can be adjusted to the groove when the standard sizes cannot be used.

Ball valve seal

The seal is secured in its groove and thereby prevented from being blown out.

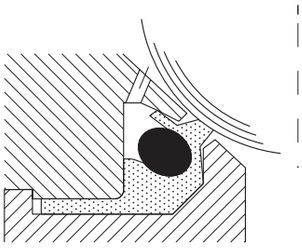

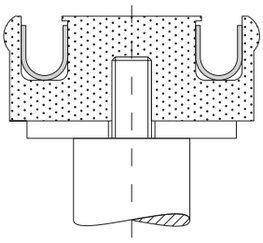

Integrated piston seal

In applications with aggressive media a design with seals integrated in the piston could be a suitable alternative.

Double acting piston seal

Design with combined guide and double-acting seals integrated in the piston, appropriate for aggressive media.

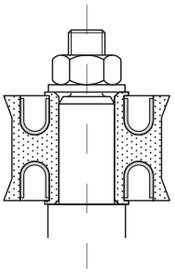

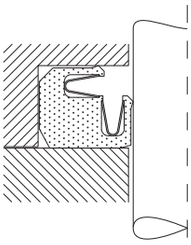

Rotating/Turning

Special design for rotating or turning movements and for static sealing, both radially and axially.

Valve seal

Designed to prevent deformation of the dynamic sealing lip.

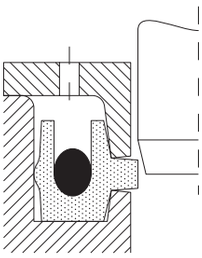

product index

Profile	Type	Specification	Limitations of Use		Material	
			Temperature	Velocity	Sealing element	Page
	GA	Single acting metal caged	-30 up to +110° C	up to 4 m/s	NBR	143
	GAS	Single acting metal caged	-30 up to +110° C	up to 4 m/s	NBR	147
	SER	Single acting	-30 up to +110° C	up to 4 m/s	NBR	150
	R08	Single acting	-30 up to +110° C	up to 4 m/s	NBR	153
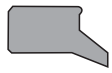	PW	Single acting	-40 up to +110° C	up to 0,8 m/s	AU Polyurethane	156
	PW/B	Single acting	-40 up to +110° C	up to 0,8 m/s	AU Polyurethane	159
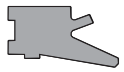	PWY	Single acting	-40 up to +110° C	up to 0,8 m/s	AU Polyurethane	161
	PW/F	Single acting	-40 up to +110° C	up to 0,8 m/s	AU Polyurethane	164
	RSW	Double acting	-40 up to +110° C	up to 0,8 m/s	AU Polyurethane	167
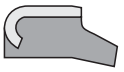	PA	Single acting metal caged	-40 up to +100° C	up to 0,6 m/s	AU Polyurethane	170
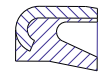	PAK	Single acting - metal caged with out additional slip of lip	-40 up to +100° C	up to 0,6 m/s	AU Polyurethane	170
	AF-480	Single acting with O - ring	-40 up to +200° C	up to 15 m/s	PTFE Compound	175
	AF-485	Double acting with O - ring	-40 up to +200° C	up to 15 m/s	PTFE Compound	180
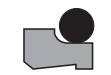	AF-487	Double acting with O - ring	-40 up to +200° C	up to 15 m/s	PTFE Compound	185

Regarding the great variety of practice applications please ask our customer service department personally for missing types or dimensions

Wiper
GA

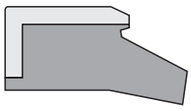

The single acting wiper/scraper GA which has been in use for a long time excels in terms of high wiper/scraper function and easy assembly. It reliably blocks the entry of dirt-particles into the system, thus enhancing service life of the hydraulic rod seal and the wear ring.

Special Features:

- Excellent wiper/scraper function at low friction
- Low wear even under demanding conditions
- Form vulcanised elastomer and a metal cover
- Easy assembly in open grooves; secure sealing of wiper/scraper
- Groove geometry is easy to produce
- Wiper/scraper is also available in FPM for special applications
- Extensive sizes of this series also for ISO mounting in open grooves.

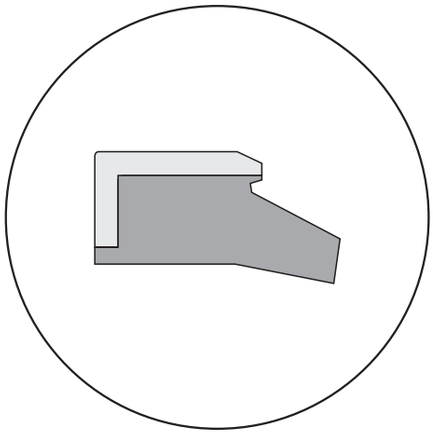

Material : elastomer-metal-combination
Velocity : reciprocating to 4 m/s
Temperature : -30 to +110 °C

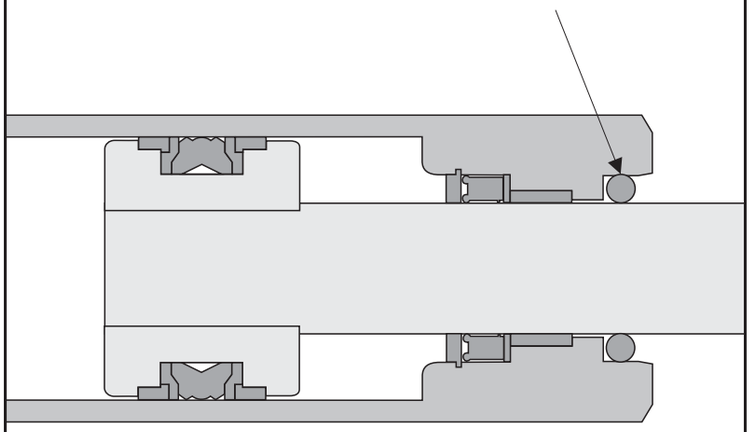

Wiper
GA

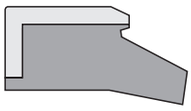

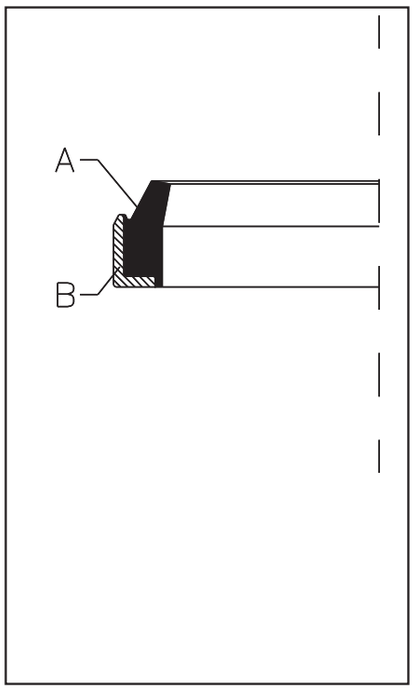

Wiper/scraper element (Part A)

Material: Acrylonitrile Rubber (NBR)
Special materials and practical design of the robust wiper/scraper lip ensures a good wipe/scraper function at low friction. To stop cContaminants are reliably prevented from entering the system, is this a reliably prevented, thus enhancing the life of the rod seal and wear ring. Wiper/scraper ring is vulcanised into the metallic casing.

Metal Cage (Part B)

Material: Steel
The precision that the metal cages are made to is an oversize of the external diameter and close manufacturing tolerances guarantee a secure hold and precise press fit in the wiper/scraper open groove. This metal type of cage is also available in high grade steel on request.

Wiper
GA

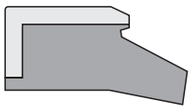

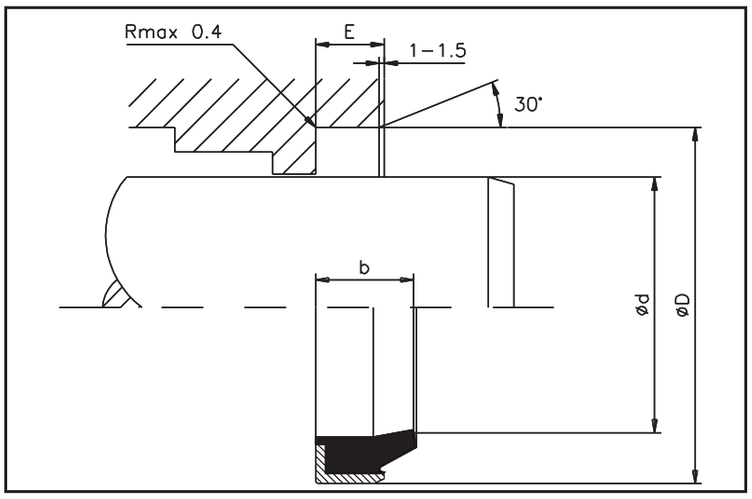

Limitations on Use

Velocity	: reciprocating to 4 m/s
Temperature	: -30 to +110 ° C

Media for Use

Mineral oil based hydraulic oil, flame resistant pressure media and emulsions (HFA, HFB, HFC), non-polluting pressure fluids (Bio Oils).

Surface Finish

Surfaces	Rmax	Rz	Ra
Rod diameter d	2,5 µm	1,6 µm	0,4 µm
Groovediametert D	16,0 µm	10,0 µm	3,2 µm
Groove flanks	16,0 µm	10,0 µm	3,2 µm

d f8/h9	D H8	E +0,2	b	Part N°.
10,00	**16,00**	**3,00**	**4,50**	**GA 10/16x3/4,5**
10,00	**20,00**	**5,00**	**8,00**	**GA 10/20x5/8**
12,00	**20,00**	**4,00**	**6,00**	**GA 12/20x4/6**
12,00	**22,00**	**5,00**	**8,00**	**GA 12/22x5/8**
14,00	**19,80**	**3,00**	**4,50**	**GA 14/19,8x3/4,5**
14,00	**20,00**	**3,50**	**5,00**	**GA 14/20x3,5x5**
14,00	**22,00**	**3,00**	**4,00**	**GA 14/22x3/4**
15,00	25,00	5,00	8,00	GA 15/25x5/8
16,00	**22,00**	**3,00**	**4,00**	**GA 16/22x3/4**
16,00	**24,00**	**3,00**	**4,00**	**GA 16/24x3/4**
16,00	**26,00**	**5,00**	**8,00**	**GA 16/26x5/8**
18,00	**28,00**	**5,00**	**7,00**	**GA 18/28x5/7**
18,00	**28,00**	**7,00**	**10,00**	**GA 18/28x7/10**
18,00	**28,00**	**7,00**	**12,00**	**GA 18/28x7/12**
18,00	**32,00**	**5,00**	**9,00**	**GA 18/32x5/9**
20,00	**28,00**	**3,50**	**5,00**	**GA 20/28x3,5/5**
20,00	**28,00**	**5,00**	**8,00**	**GA 20/28x5/8**
20,00	**30,00**	**4,00**	**6,00**	**GA 20/30x4/6**
20,00	**30,00**	**5,00**	**8,00**	**GA 20/30x5/8**
20,00	**30,00**	**7,00**	**10,00**	**GA 20/30x7/10**
20,00	**35,00**	**7,00**	**10,00**	**GA 20/35x7/10**
21,00	28,00	3,50	5,00	GA 21/28x3,5/5
22,00	**28,00**	**5,00**	**9,00**	**GA 22/28x5/9**
22,00	**32,00**	**5,00**	**7,00**	**GA 220-02/32x5/7**
22,00	**32,00**	**7,00**	**10,00**	**GA 22/32x7/10**
22,00	**35,00**	**5,00**	**8,00**	**GA 22/35x5/8**
24,00	32,00	5,00	7,00	GA 24/32x5/7
25,00	**31,00**	**5,00**	**7,00**	**GA 25/31x5/7**
25,00	**33,00**	**4,00**	**7,00**	**GA 25/33x4/7**
25,00	**35,00**	**5,00**	**8,00**	**GA 25/35x5/8**
25,00	**35,00**	**7,00**	**10,00**	**GA 25/35x7/10**
28,00	**38,00**	**5,00**	**8,00**	**GA 28/38x5/8**
28,00	**38,00**	**7,00**	**10,00**	**GA 28/38x7/10**
28,00	**40,00**	**7,00**	**10,00**	**GA 28/40x7/10**
30,00	40,00	5,00	8,00	GA 30/40x5/8
30,00	40,00	7,00	10,00	GA 30/40x7/10
30,00	45,00	5,00	8,00	GA 30/45x5/8
32,00	**40,00**	**4,00**	**7,00**	**GA 32/40x4/7**
32,00	**40,00**	**7,00**	**10,00**	**GA 32/40x7/10**

d f8/h9	D H8	E +0,2	b	Part N°.
32,00	**42,00**	**5,00**	**7,00**	**GA 32/42x5/7**
32,00	**42,00**	**7,00**	**10,00**	**GA 32/42x7/10**
32,00	**45,00**	**4,00**	**8,00**	**GA 32/45x4/8**
32,00	**45,00**	**5,00**	**7,00**	**GA 32/45x5/7**
32,00	**45,00**	**7,00**	**10,00**	**GA 32/45x7/10**
35,00	45,00	5,00	8,00	GA 35/45x5/8
35,00	45,00	7,00	10,00	GA 35/45x7/10
35,00	52,00	7,00	10,00	GA 35/52x7/10
36,00	45,00	7,00	10,00	GA 36/45x7/10
36,00	46,00	7,00	10,00	GA 36/46x7/10
38,00	48,00	7,00	10,00	GA 38/48x7/10
40,00	**50,00**	**5,00**	**8,00**	**GA 40/50x5/8**
40,00	**50,00**	**7,00**	**10,00**	**GA 40/50x7/10**
40,00	**52,00**	**5,00**	**8,00**	**GA 40/52x5/8**
40,00	**52,00**	**7,00**	**10,00**	**GA 40/52x7/10**
42,00	52,00	7,00	10,00	GA 42/52x7/10
42,00	55,00	7,00	10,00	GA 42/55x7/10
45,00	**55,00**	**7,00**	**10,00**	**GA 45/55x7/10**
45,00	**60,00**	**7,00**	**10,00**	**GA 45/60x7/10**
48,00	60,00	7,00	10,00	GA 48/60x7/10
50,00	**56,00**	**5,00**	**7,00**	**GA 50/56x5/7**
50,00	**56,00**	**5,00**	**8,00**	**GA 50/56x5/8**
50,00	**60,00**	**5,00**	**7,00**	**GA 50/60x5/7**
50,00	**60,00**	**7,00**	**10,00**	**GA 50/60x7/10**
50,00	**65,00**	**7,00**	**10,00**	**GA 50/65x7/10**
52,00	62,00	7,00	10,00	GA 52/62x7/10
55,00	63,00	7,00	10,00	GA 55/63x7/10
55,00	65,00	7,00	10,00	GA 55/65x7/10
56,00	**65,00**	**7,00**	**10,00**	**GA 56/65x7/10**
56,00	**66,00**	**7,00**	**10,00**	**GA 56/66x7/10**
60,00	70,00	7,00	10,00	GA 60/70x7/10
60,00	80,00	7,00	10,00	GA 60/80x7/10
63,00	**75,00**	**7,00**	**10,00**	**GA 63/75x7/10**
65,00	75,00	7,00	10,00	GA 65/75x7/10
70,00	**80,00**	**7,00**	**10,00**	**GA 70/80x7/10**
75,00	85,00	7,00	10,00	GA 75/85x7/10
75,00	87,00	5,00	7,00	GA 75/87x5/7
78,00	88,00	7,00	10,00	GA 78/88x7/10
80,00	90,00	7,00	10,00	GA 80/90x7/10

Wiper
GA

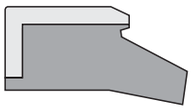

d f8/h9	D H8	E +0,2	b	Part N°.
85,00	95,00	7,00	10,00	GA 85/85x7/10
90,00	100,00	7,00	10,00	GA 90/100x7/10
95,00	105,00	7,00	10,00	GA 95/105x7/10
100,00	**110,00**	**7,00**	**10,00**	**GA 100/110x7/10**
105,00	115,00	7,00	10,00	GA 105/115x7/10
110,00	**120,00**	**7,00**	**10,00**	**GA 110/120x7/10**
115,00	125,00	7,00	10,00	GA 115/125x7/10
120,00	130,00	7,00	10,00	GA 120/130x7/10
125,00	**140,00**	**9,00**	**12,00**	**GA 125/140x9/12**
130,00	145,00	9,00	12,00	GA 130/145x9/12
135,00	145,00	7,00	10,00	GA 135/145x7/10
135,00	150,00	9,00	12,00	GA 135/150x9/12
140,00	**150,00**	**7,00**	**10,00**	**GA 140/150x7/10**
140,00	155,00	9,00	12,00	GA 140/155x9/12

d f8/h9	D H8	E +0,2	b	Part N°.
145,00	160,00	9,00	12,00	GA 145/160x9/12
150,00	165,00	9,00	12,00	GA 150/165x9/12
160,00	**175,00**	**9,00**	**12,00**	**GA 160/175x9/12**
163,00	175,00	7,00	10,00	GA 163/175x7/10
170,00	185,00	10,00	14,00	GA 170/185x10/14
180,00	**195,00**	**10,00**	**14,00**	**GA 180/195x10/14**
200,00	**220,00**	**12,00**	**16,00**	**GA 200/220x12/16**
210,00	230,00	12,00	16,00	GA 210/230x12/16
220,00	**240,00**	**9,00**	**12,00**	**GA 220/240x9/12**
310,00	340,00	16,00	22,00	GA 310/340x16/22
320,00	**340,00**	**12,00**	**16,00**	**GA 320/340x12/16**
360,00	**380,00**	**15,00**	**18,00**	**GA 360/380x15/18**
390,00	420,00	16,00	22,00	GA 390/420x16/22
490,00	520,00	16,00	22,00	GA 490/520x16/22

Dimensions in bold correspond to rod diameter as per ISO 3320.
Further sizes also available in FPM on request.

Example for ordering Wipers:

GA 32 / 40 x 4/7 - N

- Type
- Rod diameter d
- Housing diameter D
- Width housing and wiper
- Standard material

Material Key:

Wiper
N - NBR
F - FPM

WARNING: Limits of application stated herein are standard values. They could be individually transgressed with due consideration to respective service conditions. In the event of a large duty cycle, pulsating operation and other complex operational conditions, simultaneous transgression of these values is not recommended. Due to a large variety of service conditions that may arise in course of actual use, the company does not take responsibility of or guarantee the functional accuracy of the individual components. Rights for changes are reserved.

Wiper
GAS

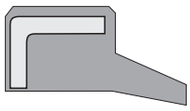

Single acting wiper/scraper GAS guarantees good wiper/scraper action and also a good static sealing due to the rubber on OD . This system reliably protects the wear ring from entry by dirt-particles and water, thereby enhancing service life of rod seal and wear ring.

Special Features:

- Very good wiping/scraping function at low friction
- Low wear even under rough service conditions
- Fully vulcanised metal insert
- Metal insert - no chance of corrosion
- Easy assembly in open groove, secured wipers/scrapers position
- Easy assembly due to the groove geometry
- Wiper/scraper is also available in FPM for special applications.

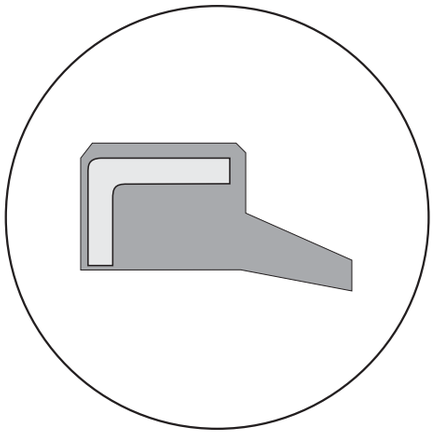

Material: rubber elastomer/metal combination
Velocity: reciprocating to 4 m/s
Temperature : -30 to +110 °C

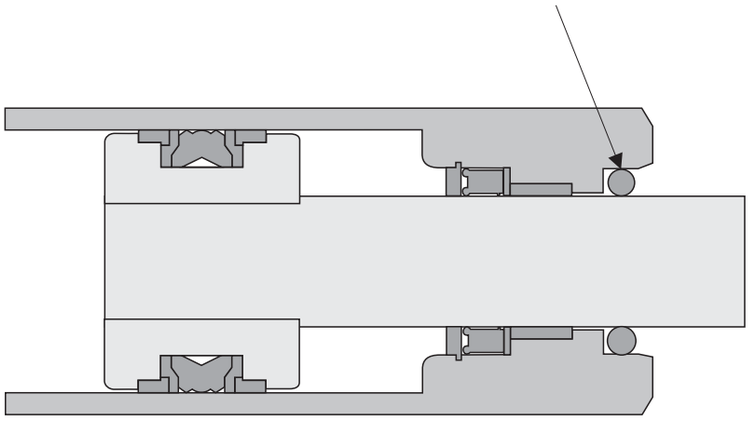

Wiper
GAS

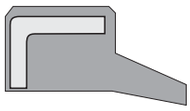

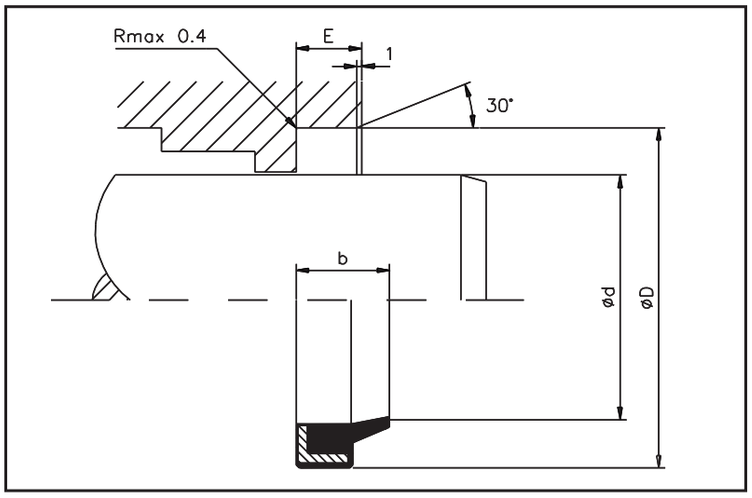

Limitations on Use

Velocity	: reciprocating to 4 m/s
Temperature	: -30 bis +110 °C

Media for Use

Mineral oil based hydraulic oil, flame resistant pressure media and emulsions (HFA, HFB, HFC), non-polluting pressure fluids (Bio Oils).

Surface Finish

	Rmax	Rz	Ra
Rod	2,5 µm	1,6 µm	0,4 µm
Diameter/housing	16,0 µm	10,0 µm	3,2 µm
Groove flank	16,0 µm	10,0 µm	3,2 µm

d f8/h9	D H8	E +0,2	b	Part N°.
8,00	**14,00**	**3,50**	**5,00**	**GAS 8/14x3,5/5**
10,00	**16,00**	**3,50**	**5,00**	**GAS 10/16x3,5/5**
12,00	**18,00**	**3,50**	**5,00**	**GAS 12/18x3,5/5**
14,00	**20,00**	**3,50**	**5,00**	**GAS 14/20x3,5/5**
15,00	21,00	3,50	5,00	GAS 15/21x3,5/5
16,00	**22,00**	**3,50**	**5,00**	**GAS 16/22x3,5/5**
18,00	**28,00**	**5,00**	**7,00**	**GAS 18/28x5/7**
20,00	**30,00**	**5,00**	**7,00**	**GAS 20/30x5/7**
22,00	**32,00**	**5,00**	**7,00**	**GAS 22/32x5/7**
25,00	**35,00**	**5,00**	**7,00**	**GAS 25/35x5/7**
28,00	**38,00**	**5,00**	**7,00**	**GAS 28/38x5/7**
30,00	40,00	5,00	7,00	GAS 30/50x5/7
32,00	**42,00**	**5,00**	**7,00**	**GAS 32/42x5/7**
35,00	45,00	7,00	10,00	GAS 35/45x7/10
36,00	**46,00**	**5,00**	**7,00**	**GAS 36/46x5/7**
40,00	**50,00**	**5,00**	**8,00**	**GAS 40/50x5/8**
42,00	52,00	5,00	7,00	GAS 42/52x5/7
45,00	**55,00**	**5,00**	**7,00**	**GAS 45/55x5/7**
50,00	**60,00**	**5,00**	**7,00**	**GAS 50/60x5/7**
55,00	65,00	5,00	7,00	GAS 55/65x5/7
56,00	**66,00**	**5,00**	**7,00**	**GAS 56/66x5/7**
60,00	70,00	5,00	7,00	GAS 60/70x5/7
63,00	**73,00**	**5,00**	**7,00**	**GAS 63/73x5/7**
65,00	75,00	5,00	7,00	GAS 65/75x5/7
70,00	**80,00**	**5,00**	**7,00**	**GAS 70/80x5/7**
75,00	83,00	7,00	10,00	GAS 75/83x7/10
80,00	**88,00**	**7,00**	**10,00**	**GAS 80/88x7/10**

Sizes also available in FPM. Extensive range of inch measurement diagrams available on request.
Bold figures correspond to rod diameters as per ISO 3320.

Wiper
GAS

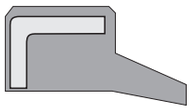

Example for ordering Wipers:

GAS 30 / 40 x 5/7 - N

- Type: GAS
- Rod diameter d: 30
- Housing diameter D: 40
- Width housing and wiper: 5/7
- Standard material: N

Material Key:

N - NBR
F - FPM

WARNING: Limits of application stated herein are standard values. They could be individually transgressed with due consideration to respective service conditions. In the event of a large duty cycle, pulsating operation and other complex operational conditions, simultaneous transgression of these values is not recommended. Due to a large variety of service conditions that may arise in course of actual use, the company does not take responsibility of or guarantee the functional accuracy of the individual components. Rights for changes are reserved.

Wiper
SER

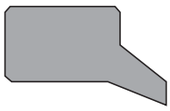

Single acting wiper/scraper SER reliably blocks entry of dirt-particles and water into the hydraulic cylinder. Could also be used in hydraulics as well as in pneumatics.

Special Features:

- Very good wiper/scraper function
- Anti-wear NBR material
- Closed groove, secure the fit
- Easy fit
- Also available in FPM for special application.

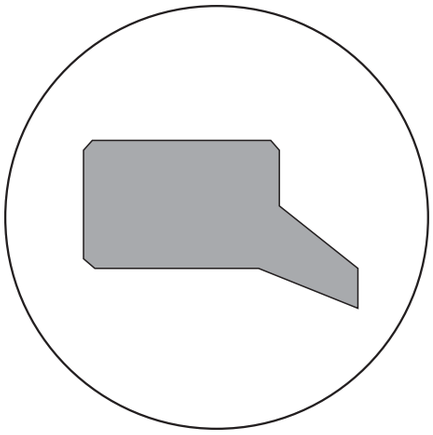

Material: acrylonitrile rubber (NBR)
Velocity: reciprocating to 4 m/s
Temperature: -30 to +110 °C

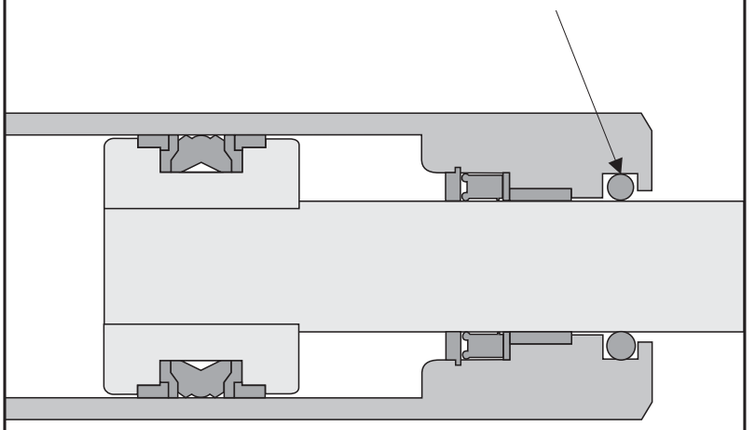

Wiper
SER

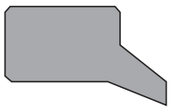

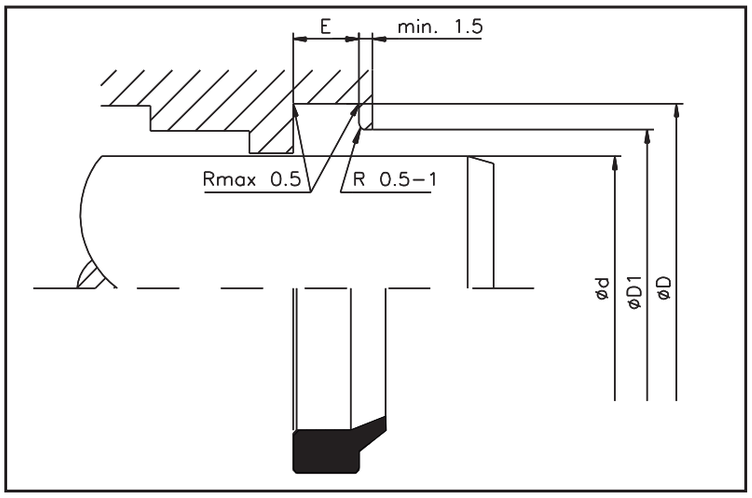

Limitations on Use

Velocity	: reciprocating to 4 m/s
Temperature	: -30 bis +110 °C

Media for Use

Mineral oil based hydraulic oil, flame resistant pressure media and emulsions (HFA, HFB, HFC), non-polluting pressure fluids (Bio Oils).

Surface Finish

Surfaces	Rmax	Rz	Ra
Rod diameter d	2,5 µm	1,6 µm	0,4 µm
Housing diameter	16,0 µm	10,0 µm	3,2 µm
Groove flanks	16,0 µm	10,0 µm	3,2 µm

d f8/h9	D H11	E +0,2	D1 +0,2	Part N°.
3,00	6,00	2,50	4,50	SER 3/6x2,5x2,75
4,00	7,00	2,50	6,50	SER 4/7x2,5x2,75
5,00	8,00	2,50	6,50	SER 5/8x2,5x2,75
6,00	9,00	2,50	7,50	SER 6/9x2,5x2,75
7,00	10,00	2,50	8,50	SER 7/10x2,5x2,75
8,00	11,00	2,50	9,50	SER 8/11x2,5x2,75
9,00	12,00	2,50	10,50	SER 9/12x2,5x2,75
10,00	13,00	2,50	11,50	SER 10/13x2,5x2,75
10,00	14,00	3,20	12,00	SER 10/14x3,2x3,9
11,20	15,20	3,20	13,20	SER 11,2/15,2x3,2x3,9
12,00	16,00	3,20	14,00	SER 12/16x3,2x3,9
12,50	16,50	3,20	14,50	SER 14/18x3,2x3,9
15,00	19,00	3,20	17,00	SER 15/19x3,2x3,9
16,00	20,00	3,20	18,00	SER 16/20x3,2x3,9
18,00	22,00	3,20	20,00	SER 18/22x3,2x3,9
20,00	24,00	3,20	22,00	SER 20/24x3,2x3,9
22,00	26,00	3,20	24,00	SER 22/26x3,2x3,9
22,00	28,00	4,70	25,00	SER 22/28x4,7x5,8
22,40	28,40	4,70	25,40	SER 22,4/28,4x4,7x5,8
24,00	30,00	4,70	27,00	SER 24/30x4,7x5,8
25,00	31,00	4,70	28,00	SER 25/31x4,7x5,8
26,00	32,00	4,70	29,00	SER 26/35x4,7x5,8
28,00	34,00	4,70	31,00	SER 28/34x4,7x5,8
30,00	36,00	4,70	33,00	SER 30/36x4,7x5,8
31,00	37,00	4,70	34,00	SER 31/37x4,7x5,8
31,50	37,50	4,70	34,50	SER 31,5/37,5x4,7x5,8
32,00	38,00	4,70	35,00	SER 32/38x4,7x5,8
34,00	40,00	4,70	37,00	SER 34/40x4,7x5,8
35,00	41,00	4,70	38,00	SER 35/41x4,7x5,8
35,50	41,50	4,70	38,50	SER 35,5/41,5x4,7x5,8
36,00	42,00	4,70	39,00	SER 36/42x4,7x5,8
38,00	44,00	4,70	41,00	SER 38/44x4,7x5,8
40,00	46,00	4,70	43,00	SER 40/46x4,8x5,8
41,00	47,00	4,70	44,00	SER 41/47x4,7x5,8
42,00	48,00	4,70	45,00	SER 42/48x4,7x5,8

d f8/h9	D H11	E +0,2	D1 +0,2	Part N°.
44,00	50,00	4,70	47,00	SER 44/50x4,7x5,8
45,00	51,00	4,70	48,00	SER 45/51x4,7x5,8
46,00	52,00	4,70	49,00	SER 46/52x4,7x5,8
48,00	54,00	4,70	51,00	SER 48/54x4,7x5,8
48,00	58,00	7,50	53,00	SER 48/58x7,5x9,4
50,00	56,00	4,70	53,00	SER 50/56x4,7x5,8
50,00	60,00	7,50	55,00	SER 50/60x7,5x9,4
52,00	62,00	7,50	57,00	SER 52/62x7,5x9,4
53,00	63,00	7,50	58,00	SER 53/63x7,5x9,4
55,00	65,00	7,50	60,00	SER 55/65x7,5x9,4
56,00	66,00	7,50	61,00	SER 56/66x7,5x9,4
58,00	68,00	7,50	63,00	SER 58/68x7,5x9,4
60,00	70,00	7,50	65,00	SER 60/70x7,5x9,4
62,00	72,00	7,50	67,00	SER 62/72x7,5x9,4
63,00	73,00	7,50	68,00	SER 63/73x7,5x9,4
65,00	75,00	7,50	70,00	SER 65/75x7,5x9,4
67,00	77,00	7,50	72,00	SER 67/77x7,5x9,4
70,00	80,00	7,50	75,00	SER 70/80x7,5x9,4
71,00	81,00	7,50	76,00	SER 71/81x7,5x9,4
75,00	85,00	7,50	80,00	SER 75/85x7,5x9,4
80,00	90,00	7,50	85,00	SER 80/90x7,5x9,4
85,00	95,00	7,50	90,00	SER 85/95x7,5x9,4
90,00	100,00	7,50	95,00	SER 90/100x7,5x9,4
95,00	105,00	7,50	100,00	SER 95/105x7,5x9,4
100,00	110,00	7,50	105,00	SER 100/110x7,5x9,4
120,00	130,00	7,50	125,00	SER 120/130x7,5x9,4

Sizes also available in FPM.

Wiper
SER

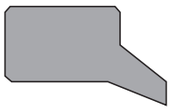

Example for ordering Wipers:

SER 36 / 42 x4,7/5,8N

Type
Rod diameter
Groove diameter
Groove width

Material Key:

N - NBR
F - FPM

WARNING: Limits of application stated herein are standard values. They could be individually transgressed with due consideration to respective service conditions. In the event of a large duty cycle, pulsating operation and other complex operational conditions, simultaneous transgression of these values is not recommended. Due to a large variety of service conditions that may arise in course of actual use, the company does not take responsibility of or guarantee the functional accuracy of the individual components. Rights for changes are reserved.

Wiper
R08

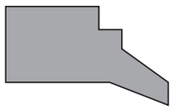

Single acting wiper/scraper R08 is good to block entry of dust particles and water in the hydraulic cylinder. It can be used both in hydraulics and pneumatics.

Special Features:

- Very good wiper/scraper performance
- Anti-wear NBR material
- Special form of closed seal groove is achieved by a step on the outer diameter
- Easy assembly in groove
- Also available in FPM for special applications.

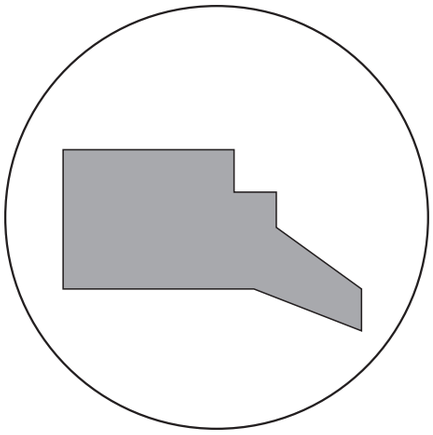

Material: acrylonitrile rubber (NBR)
Velocity: reciprocating to 4 m/s
Temperature: -30 to +110 °C

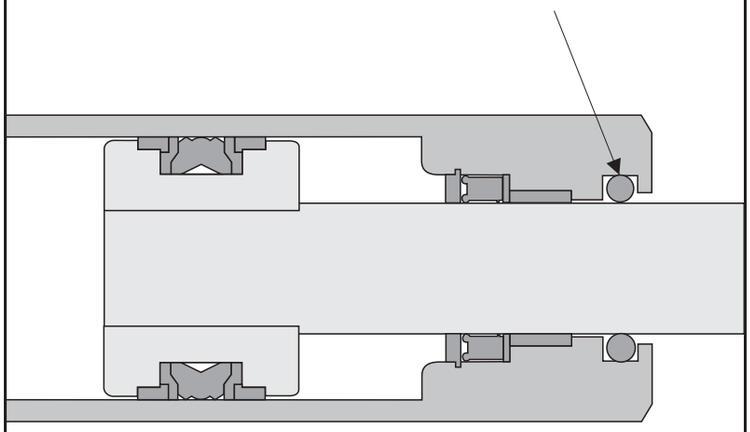

Wiper
R08

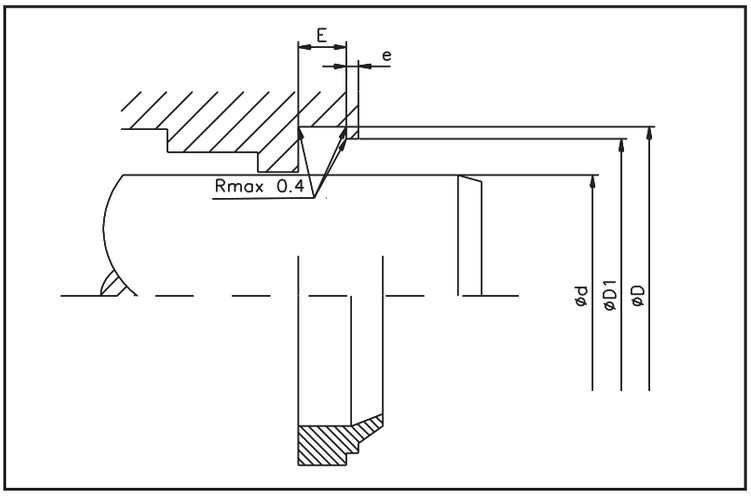

Limitations on Use

Velocity	:	reciprocating to 4 m/s
Temperature	:	-30 bis +110 °C

Media for Use

Mineral oil based hydraulic oils, flame resistant pressure media and emulsions (HFA,HFB, HFC), non-polluting pressure fluids (Bio Oils).

Surface Finish

Surfaces	Rmax	Rz	Ra
Rod diameter d	2,5 µm	1,6 µm	0,4 µm
Groove diameter D	16,0 µm	10,0 µm	3,2 µm
Groove flanks	16,0 µm	10,0 µm	3,2 µm

d f8/h9	D H 11	E +0,2	D1 +0,2	e min	Part N°.
8,00	**16,00**	**4,00**	**14,00**	**1,00**	**R08 8/16x4**
10,00	**18,00**	**4,00**	**16,00**	**1,00**	**R08 10/18x4**
12,00	**20,00**	**4,00**	**18,00**	**1,00**	**R08 12/20x4**
14,00	**22,00**	**4,00**	**20,00**	**1,00**	**R08 14/22x4**
16,00	**24,00**	**4,00**	**22,00**	**1,00**	**R08 16/24x4**
18,00	**26,00**	**4,00**	**24,00**	**1,00**	**R08 18/26x4**
20,00	**28,00**	**4,00**	**26,00**	**1,00**	**R08 20/28x4**
22,00	**30,00**	**4,00**	**28,00**	**1,00**	**R08 22/30x4**
25,00	**33,00**	**4,00**	**31,00**	**1,00**	**R08 25/33x4**
28,00	**36,00**	**4,00**	**34,00**	**1,00**	**R08 28/36x4**
30,00	38,00	4,00	36,00	1,00	R08 30/38x4
32,00	**40,00**	**4,00**	**38,00**	**1,00**	**R08 32/40x4**
35,00	43,00	4,00	41,00	1,00	R08 35/43x4
36,00	**44,00**	**4,00**	**42,00**	**1,00**	**R08 36/44x4**
40,00	**48,00**	**4,00**	**46,00**	**1,00**	**R08 40/48x4**
42,00	50,00	4,00	48,00	1,00	R08 42/50x4
45,00	**53,00**	**4,00**	**51,00**	**1,00**	**R08 45/53x4**
50,00	**58,00**	**4,00**	**56,00**	**1,00**	**R08 50/58x4**
55,00	63,00	4,00	61,00	1,00	R08 55/63x4
56,00	**64,00**	**4,00**	**62,00**	**1,00**	**R08 56/64x4**
60,00	68,00	4,00	66,00	1,00	R08 60/68x4
63,00	**71,00**	**4,00**	**69,00**	**1,00**	**R08 63/71x4**
70,00	**78,00**	**4,00**	**76,00**	**1,00**	**R08 70/78x4**
80,00	**88,00**	**4,00**	**86,00**	**1,00**	**R08 80/88x4**
90,00	**98,00**	**4,00**	**96,00**	**1,00**	**R08 90/98x4**
95,00	103,00	4,00	101,00	1,00	R08 95/103x4
100,00	**108,00**	**4,00**	**106,00**	**1,00**	**R08 100/108x4**
110,00	**122,00**	**5,50**	**119,00**	**1,50**	**R08 110/122x5,5**
120,00	132,00	5,50	129,00	1,50	R08 120/132x5,5
125,00	**137,00**	**5,50**	**134,00**	**1,50**	**R08 125/137x5,5**
140,00	**152,00**	**5,50**	**149,00**	**1,50**	**R08 140/152x5,5**
160,00	**172,00**	**5,50**	**169,00**	**1,50**	**R08 160/172x5,5**
180,00	**192,00**	**5,50**	**189,00**	**1,50**	**R08 180/192x5,5**
200,00	**212,00**	**5,50**	**209,00**	**1,50**	**R08 200/212x5,5**
220,00	**235,00**	**6,50**	**231,00**	**2,00**	**R08 220/235x6,5**
250,00	**265,00**	**6,50**	**261,00**	**2,00**	**R08 250/265x6,5**

Sizes also available in FPM. Extensive range of inch measurement diagrams available on request
Bold figures correspond to rod diameters as per ISO 3320..

Wiper
R08

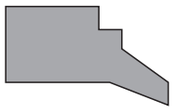

Example for ordering Wipers:

R08 36 / 44 x 4N

Type
Rod diameter d
Groove diameter D
Groove width

Material Key:

Wiper ring
N - NBR
F - FPM

WARNING: Limits of application stated herein are standard values. They could be individually transgressed with due consideration to respective service conditions. In the event of a large duty cycle, pulsating operation and other complex operational conditions, simultaneous transgression of these values is not recommended. Due to a large variety of service conditions that may arise in course of actual use, the company does not take responsibility of or guarantee the functional accuracy of the individual components. Rights for changes are reserved.

Wiper
PW

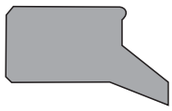

Single acting wiper/scraper PW reliably prevents entry of dirt and water into the hydraulic cylinder. It can be used in both hydraulics and pneumatics.

Special Features:

- Outstanding wiper/scraper performance
- Anti wear polyurethane elastomer
- Closed groove, secure the fit
- Easy assembly in groove
- Lip on external diameter prevents entry of water

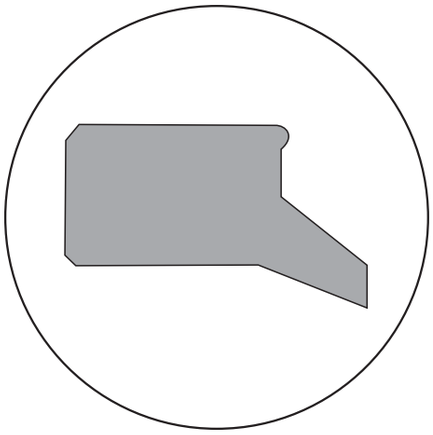

Material: polyurethane
Velocity: reciprocating to 0.8 m/s
Temperatur: -40 to +110 °C

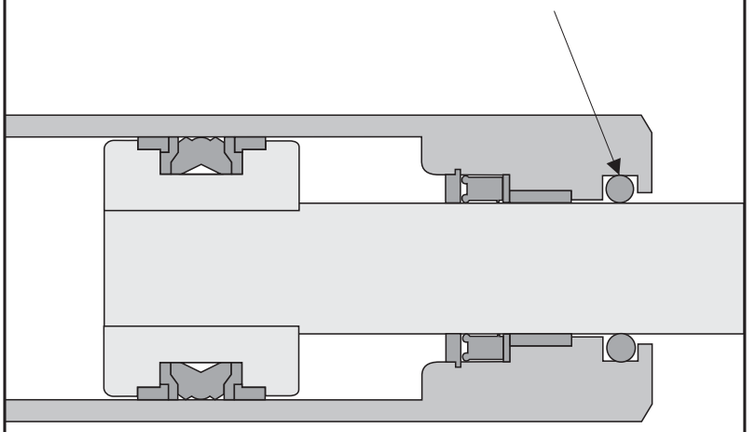

Wiper
PW

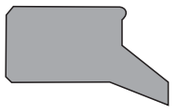

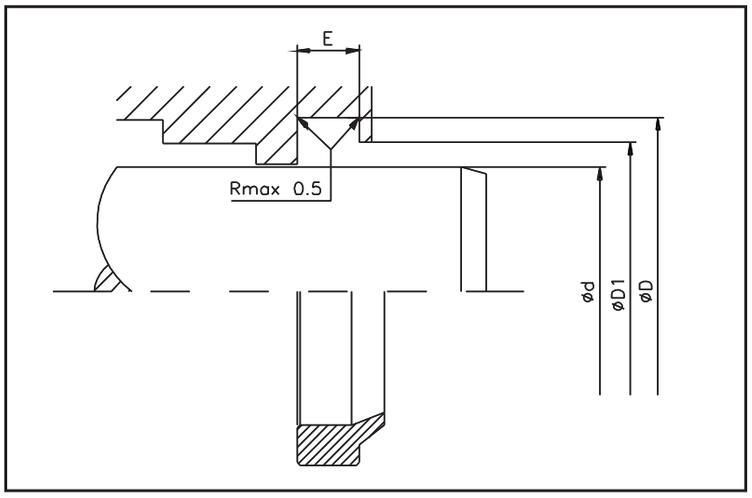

Limitations on Use

Velocity : reciprocating to 0.8 m/s
Temperature : -40 bis +110 °C

Media for Use

Mineral oil based hydraulic oils, Bio Oils and flame resistant pressure fluids on request.

Surface Finish

	Rmax	Rz	Ra
Rod diameter d	2,5 µm	1,6 µm	0,4 µm
Groove diameter D	16,0 µm	10,0 µm	3,2 µm
Groove flanks	16,0 µm	10,0 µm	3,2 µm

d f8/h9	D H11	E +0,2	D1 H11	Part N°.
4,00	**12,00**	**3,00**	**9,00**	**PW 4/12x3**
5,00	**12,00**	**2,80**	**9,00**	**PW 5/12x2,8**
6,00	**12,00**	**3,00**	**9,00**	**PW 6/12x3**
8,00	**14,60**	**3,80**	**11,00**	**PW 8/14,6x3,8**
9,00	13,00	2,50	12,00	PW 9/13x2,5
10,00	**15,00**	**1,00**	**13,00**	**PW 10/15x1**
10,00	**16,60**	**3,80**	**13,80**	**PW 10/16,6x3,8**
12,00	**18,60**	**3,80**	**15,00**	**PW 12/18,6x3,8**
14,00	**20,60**	**3,80**	**17,00**	**PW 14/20,6x3,8**
15,00	21,60	3,80	18,00	PW 15/21,6x3,8
15,00	27,00	5,00	24,00	PW 15/27x5
16,00	**22,50**	**3,00**	**19,00**	**PW 16/22,5x3**
16,00	**22,60**	**3,80**	**19,00**	**PW 16/22,6x3,8**
18,00	**24,60**	**3,80**	**21,00**	**PW 18/24,6x3,8**
20,00	**26,00**	**3,40**	**23,00**	**PW 20/26x3,4**
20,00	**28,60**	**5,30**	**23,00**	**PW 20/28,6x5,3**
20,00	**30,00**	**5,40**	**27,00**	**PW 20/30x5,4**
22,00	**30,60**	**2,20**	**25,00**	**PW 22/30,6x2,2**
22,00	**30,60**	**5,30**	**25,00**	**PW 22/30,6x5,3**
24,00	32,60	5,30	27,00	PW 24/32,6x5,3
24,00	32,60	2,20	27,00	PW 24/32,6x2,2
25,00	**33,60**	**5,30**	**28,00**	**PW 25/33,6x5,3**
28,00	**36,60**	**5,30**	**31,00**	**PW 28/36,6x5,3**
30,00	38,60	5,30	33,00	PW 30/38,6x5,3
30,00	40,00	3,00	34,50	PW 30/40x3,0
32,00	**40,00**	**3,70**	**35,00**	**PW 32/40x3,7**
32,00	**40,60**	**5,30**	**35,00**	**PW 32/40,6x5,3**
35,00	40,00	3,70	37,00	PW 35/40x3,7
35,00	43,60	5,00	38,00	PW 35/43,6x5
35,00	43,60	5,30	38,00	PW 35/43,6x5,3
35,00	45,00	4,00	39,00	PW 35/45x4
36,00	**44,60**	**5,30**	**39,00**	**PW 36/44,6x5,3**
38,00	46,60	5,30	41,00	PW 38/46,6x5,3
38,00	48,50	4,80	41,00	PW 38/48,5x4,8
40,00	**48,60**	**5,30**	**43,00**	**PW 40/48,6x5,3**
42,00	50,60	5,30	45,00	PW 42/50,6x5,3
45,00	**53,60**	**5,30**	**48,00**	**PW 45/53,6x5,3**
45,00	**55,60**	**5,30**	**48,00**	**PW 45/55,6x5,3**
45,00	**60,00**	**4,20**	**53,00**	**PW 45/60x4,2**
46,00	54,60	5,30	49,00	PW 46/54,6x5,3

d f8/h9	D H11	E +0,2	D1 H11	Part N°.
50,00	**58,60**	**5,30**	**53,00**	**PW 50/58,6x5,3**
50,00	**60,60**	**5,30**	**53,00**	**PW 50/60,6x5,3**
50,00	**65,50**	**4,20**	**58,00**	**PW 50/65,5x4,2**
53,00	61,60	5,30	56,00	PW 53/61,6x5,3
55,00	63,60	5,30	58,00	PW 55/63,6x5,3
55,00	65,60	5,30	58,00	PW 55/65,6x5,3
56,00	**64,60**	**5,30**	**59,00**	**PW 56/64,6x5,3**
56,00	**66,60**	**5,30**	**59,00**	**PW 56/66,6x5,3**
60,00	68,60	5,30	63,00	PW 60/68,6x5,3
60,00	70,60	5,50	66,50	PW 60/70,6x5,5
63,00	**71,60**	**5,30**	**66,00**	**PW 63/71,6x5,3**
65,00	73,60	5,30	68,00	PW 65/73,6x5,3
65,00	76,60	6,00	71,50	PW 65/76,6x6
67,00	76,60	5,50	71,00	PW 67/76,6x5,5
70,00	**78,60**	**5,30**	**73,00**	**PW 70/78,6x5,3**
70,00	**80,00**	**5,00**	**74,00**	**PW 70/80x5**
70,00	**80,00**	**7,00**	**74,00**	**PW 70/80x7**
70,00	**82,60**	**7,10**	**76,00**	**PW 70/82,6x7,1**
73,00	81,60	5,30	76,00	PW 730/81,6x5,3
73,00	83,60	7,30	76,00	PW 730/83,6x7,3
75,00	83,60	5,30	78,00	PW 75/83,6x5,3
75,00	87,20	7,10	81,00	PW 75/87,2x7,1
78,00	86,00	5,00	81,00	PW 78/86x5
78,00	88,60	5,50	84,50	PW 78/88,6x5,5
78,00	92,20	7,10	85,00	PW 78/92,2x7,1
80,00	**88,60**	**5,30**	**83,00**	**PW 80/88,6x5,3**
80,00	**92,60**	**7,10**	**86,00**	**PW 80/92,6x7,1**
85,00	93,60	5,30	88,00	PW 85/93,6x5,3
85,00	97,20	7,10	91,00	PW 85/97,2x7,1
90,00	**100,00**	**7,00**	**94,00**	**PW 90/100x7**
90,00	**102,00**	**6,00**	**94,00**	**PW 90/102x6**
90,00	**102,20**	**7,10**	**96,00**	**PW 90102,2x7,1**
92,00	103,60	5,50	97,00	PW 92/103,6x5,5
93,00	101,00	5,00	96,00	PW 93/101x5
93,00	123,00	5,00	115,00	PW 93/123x5
95,00	105,00	10,00	99,00	PW 95/105x10
95,00	107,20	7,10	101,00	PW 95/107,2x7,1
97,00	105,00	5,00	100,00	PW 97/105x5
99,00	109,60	5,50	105,50	PW 99/109,6x5,5
100,00	**112,20**	**6,00**	**104,00**	**PW 100/112,2x6**

Extensive range of inch measurement diagrams available on request.

Wiper
PW

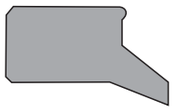

d f8/h9	D H11	E +0,2	D1 H11	Part N°.
100,00	**112,20**	**7,10**	**106,00**	**PW 100/112,2x7,1**
105,00	117,20	7,10	111,00	PW 105/117,2x7,1
110,00	**122,20**	**7,10**	**116,00**	**PW 110/122,2x7,1**
112,00	124,20	7,10	118,00	PW 112/124,2x7,1
115,00	127,00	10,00	121,00	PW 115/127x10
115,00	127,20	7,10	121,00	PW 115/127,2x7,1
118,00	126,00	5,00	121,00	PW 118/126x5
120,00	130,60	5,50	126,50	PW 120/130,6x5,5
120,00	132,20	7,10	126,00	PW 120/132,2x7,1
125,00	**137,20**	**7,10**	**131,00**	**PW 125/137,2x7,1**
128,00	140,20	7,10	134,00	PW 128/140,2x7,1
130,00	142,20	7,10	136,00	PW 130/142,2x7,1
135,00	147,20	7,10	141,00	PW 135/147,2x7,1
140,00	**148,60**	**6,00**	**143,00**	**PW 140/148,6x6**
140,00	**152,20**	**7,10**	**146,00**	**PW 140/152,2x7,1**
140,00	**155,00**	**9,00**	**147,00**	**PW 140/155x9**
141,00	151,60	5,50	147,50	PW 141/151,6x5,5
143,00	151,00	5,50	146,00	PW 143/151x5,5
145,00	157,20	7,10	151,00	PW 145/157,2x7,1
145,00	160,00	8,00	152,00	PW 145/160x8
148,00	160,00	7,00	152,00	PW 148/160x7
150,00	162,20	7,10	156,00	PW 150/162,2x7,1

d f8/h9	D H11	E +0,2	D1 H11	Part N°.
150,00	165,00	7,50	156,00	PW 150/165x7,5
160,00	**172,20**	**7,10**	**166,00**	**PW 160/172,2x7,1**
160,00	**175,20**	**10,10**	**168,00**	**PW 160/175,2x10,1**
162,00	172,60	5,50	168,00	PW 162/172,6x5,5
163,00	175,20	7,10	169,00	PW 163/175,2x7,1
170,00	178,60	5,30	173,00	PW 170/178,6x5,3
170,00	185,20	10,10	178,00	PW 170/185,2x10,1
180,00	**195,20**	**10,10**	**188,00**	**PW 180/195,2x10,1**
180,00	**200,00**	**7,00**	**188,00**	**PW 180/200x7**
183,00	193,60	5,50	189,00	PW 183/193,3x5,5
188,00	200,20	7,10	194,00	PW 188/200,2x7,1
190,00	205,20	10,10	198,00	PW 190/205,2x10,1
190,00	210,00	10,10	200,00	PW 190/210x10,1
200,00	**215,20**	**10,10**	**208,00**	**PW 200215,2x10,1**
210,00	225,20	10,10	218,00	PW 210/225,2x10,1
220,00	**235,20**	**10,10**	**228,00**	**PW 220/235,2x10,1**
220,00	**240,00**	**10,10**	**228,00**	**PW 220/240x10,1**
230,00	245,20	10,10	238,00	PW 230/245,2x10,1
240,00	**255,20**	**10,10**	**248,00**	**PW 240/255,2x10,1**
250,00	265,20	10,10	258,00	PW 250/265,2x10,1
257,00	267,60	5,50	264,00	PW 257/267,6x5,5
280,00	**300,00**	**10,20**	**290,00**	**PW 280/300x10,2**

Dimensions in bold correspond to ISO 3320.
Further dimensions available on request.

Example for ordering Wipers:

PW 20 / 28,6 x 5,3

Type
Rod diameter d
Groove diameter D
Groove width

WARNING: Limits of application stated herein are standard values. They could be individually transgressed with due consideration to respective service conditions. In the event of a large duty cycle, pulsating operation and other complex operational conditions, simultaneous transgression of these values is not recommended. Due to a large variety of service conditions that may arise in course of actual use, the company does not take responsibility of or guarantee the functional accuracy of the individual components. Rights for changes are reserved.

Wiper
PW/B

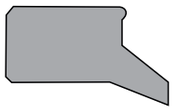

Single acting wiper/scraper PW/B reliably prevents entry of dirt and water into the hydraulic cylinder. The special choice of material makes this wiper/scraper suitable for extreme working conditions of the cylinder, e.g. mining.

Special Features:

- Outstanding wiper/scraper performance
- Anti wear polyurethane elastomer
- Closed groove, secure the fit
- Easy assembly in groove
- Relief edges on internal diameter

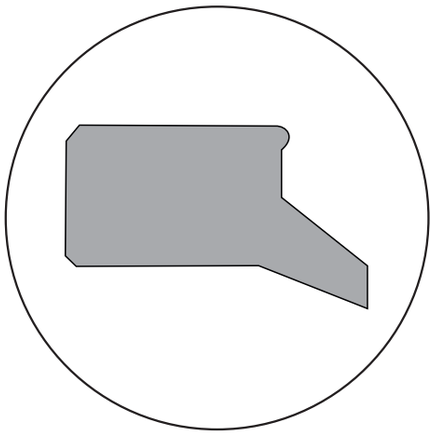

Material: polyester elastomer
Velocity: reciprocating to 0.8 m/s
Temperature: -40 to +110 °C

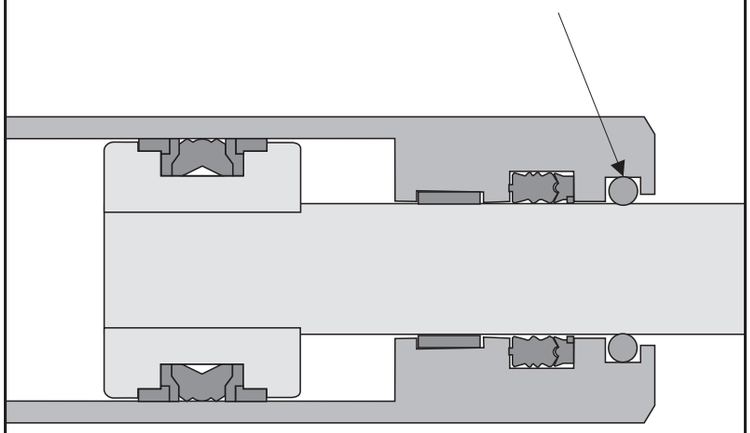

Wiper
PW/B

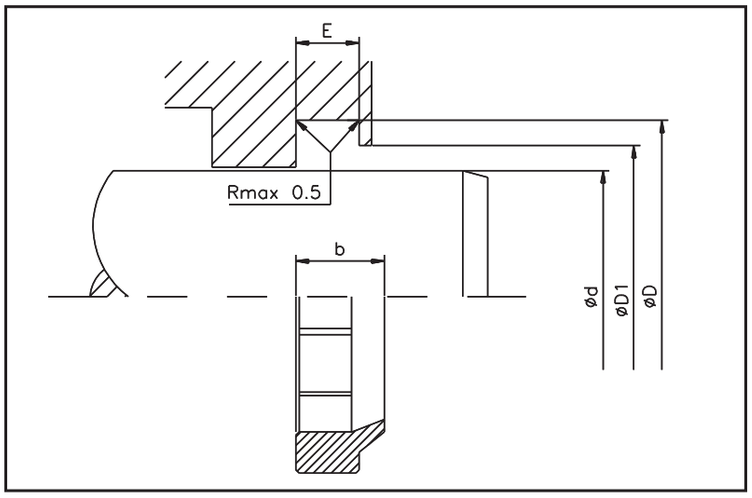

Limitations on Use

Velocity : reciprocating to 0.8 m/s
Temperature : -40 bis +110 °C

Media for Use

Mineral oil based pressure fluids, flame resistant fluids (HFA, HFB, HFC), non-polluting pressure fluids (Bio Oils).

Surface Finish

	Rmax	Rz	Ra
Rod diameter d	2,5 µm	1,6 µm	0,4 µm
Groove diameter D	16,0 µm	10,0 µm	3,2 µm
Groove flanks	16,0 µm	10,0 µm	3,2 µm

d f8/h9	D +0,2	b	D1 +0,2	E +0,2	Part N°.
50,00	58,00	8,00	55,50	5,00	PW/B 50/58x5
70,00	82,20	12,00	76,00	7,20	PW/B 70/82,2x7,2
75,00	87,20	12,00	81,00	7,20	PW/B 75/81x7,2
80,00	92,50	12,00	86,00	7,20	PW/B 80/86x7,2
90,00	105,00	12,00	100,00	7,20	PW/B 90/100x7,2
115,00	127,00	11,00	119,00	7,20	PW/B 115/119x7,2
115,00	127,20	12,00	121,00	7,20	PW/B 115/121x7,2
120,00	132,20	12,00	126,00	7,20	PW/B 120/126x7,2
135,00	147,00	12,00	141,00	7,20	PW/B 135/141x7,2
140,00	155,00	14,00	150,00	9,50	PW/B 140/150x9,5
170,00	182,00	12,00	176,00	7,60	PW/B 170/176x7,6
170,00	185,00	14,00	175,00	10,20	PW/B 170/175x10,2
175,00	190,00	14,00	185,00	9,50	PW/B 175/185x9,5
185,00	200,00	14,00	195,00	9,50	PW/B 185/195x9,5
185,00	200,00	16,00	193,00	10,20	PW/B 185/193x10,2
192,00	207,00	12,00	199,00	8,00	PW/B 192/199x8
200,00	215,00	14,00	205,00	10,20	PW/B 200/205x10,2
210,00	225,00	16,00	218,00	10,20	PW/B 210x218x10,2
212,00	227,00	12,00	220,00	7,50	PW/B 212/220x7,5
212,00	232,00	18,00	225,50	12,50	PW/B 212/225,5x12,5
220,00	240,00	18,00	233,50	10,00	PW/B 220/233,5x10
220,00	240,00	18,00	233,50	12,50	PW/B 220/233,5x12,5
235,00	252,00	12,00	244,00	7,60	PW/B 235/244x7,6
260,00	280,00	15,00	270,00	10,20	PW/B 260/270x10,2

Further sizes and an extensive range of inch measurement diagrams available on request.

Example for ordering Wipers:

PW/B 200 / 215x14

Type
Rod diameter d
Groove diameter D
Groove width

WARNING: Limits of application stated herein are standard values. They could be individually transgressed with due consideration to respective service conditions. In the event of a large duty cycle, pulsating operation and other complex operational conditions, simultaneous transgression of these values is not recommended. Due to a large variety of service conditions that may arise in course of actual use, the company does not take responsibility of or guarantee the functional accuracy of the individual components. Rights for changes are reserved.

Wiper
PWY

Single acting wiper/scraper PWY reliably prevents the entry of dirt and water in hydraulic cylinder and can be used in hydraulics as well as in pneumatics.

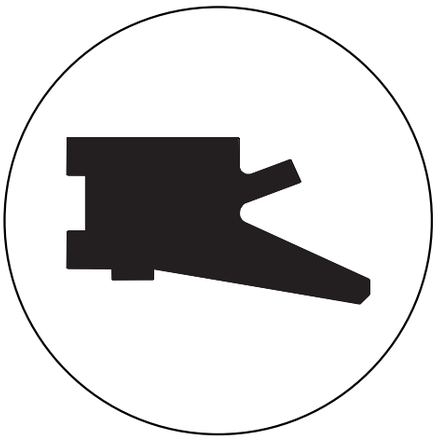

Special Features:

- Very good wiper/scraper performance
- Anti-wear polyurethane material
- Long life
- Special form of closed seal groove is achieved by a steps on outer diameter
- Easy fitting into groove
- Lip on external diameter prevents entry of water and dirt

Material : polyester elastomer
Velocity : reciprocating to 0.8 m/s
Temperature : -40 to +110 °C

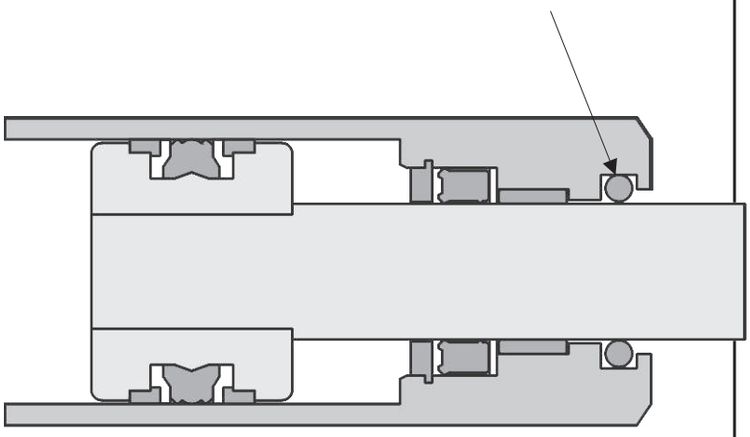

Wiper
PWY

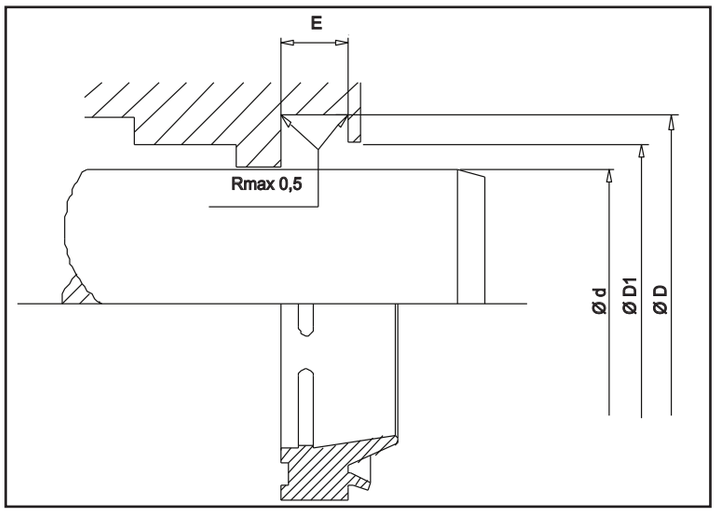

Limitations on Use

Velocity	: reciprocating to 0.8 m/s
Temperature	: -40 bis +110 °C

Media for Use

Mineral oil based hydraulic oils, Bio Oils and flame resistant pressure fluids on request.

Surface Finish

	Rmax	Rz	Ra
Rod diameter d	2,5 µm	1,6 µm	0,4 µm
Groove diameter D	16,0 µm	10,0 µm	3,2 µm
Groove flanks	16,0 µm	10,0 µm	3,2 µm

d f8/h9	D H11	E +0,2	D1 H11	Part N°.
16,00	**24,00**	**5,00**	**21,50**	**PWY 16/24x5**
18,00	**26,00**	**5,00**	**23,50**	**PWY 18/26x5**
20,00	**28,00**	**5,00**	**25,50**	**PWY 20/28x5**
22,00	**30,00**	**5,00**	**27,50**	**PWY 22/30x5**
25,00	**33,00**	**5,00**	**30,50**	**PWY 25/33x5**
28,00	**36,00**	**5,00**	**33,50**	**PWY 28/36x5**
30,00	38,00	5,00	35,50	PWY 30/38x5
32,00	**40,00**	**5,00**	**37,50**	**PWY 32/40x5**
35,00	43,00	5,00	40,50	PWY 35/43x5
35,00	43,00	4,00	40,50	PWY 35/43x4
36,00	**44,00**	**5,00**	**41,50**	**PWY 36/44x5**
40,00	**48,00**	**5,00**	**45,50**	**PWY 40/48x5**
45,00	53,00	4,00	50,50	PWY 45/53x4
45,00	**53,00**	**5,00**	**50,50**	**PWY 45/53x5**
50,00	**58,00**	**5,00**	**55,50**	**PWY 50/58x5**
55,00	63,00	4,00	60,50	PWY 55/63x4
56,00	64,00	4,00	61,50	PWY 56/64x4
56,00	**66,00**	**6,30**	**63,00**	**PWY 56/66x6,3**
60,00	68,00	4,00	65,50	PWY 60/68x4
60,00	70,00	6,30	67,00	PWY 60/70x6,3
63,00	**73,00**	**6,30**	**70,00**	**PWY 63/73x6,3**
65,00	73,00	4,00	70,50	PWY 65/73x4
70,00	**80,00**	**6,30**	**77,00**	**PWY 70/80x6,3**
80,00	**90,00**	**6,30**	**87,00**	**PWY 80/90x6,3**
85,00	95,00	6,30	92,00	PWY 85/95x6,3
90,00	**100,00**	**6,30**	**97,00**	**PWY 90/100x6,3**
100,00	**115,00**	**9,50**	**110,00**	**PWY 100/115x9,5**
110,00	**125,00**	**9,50**	**120,00**	**PWY 110/125x9,5**
125,00	**140,00**	**9,50**	**135,00**	**PWY 125/140x9,5**
140,00	150,00	4,00	147,00	PWY 140/150x4
140,00	**155,00**	**9,50**	**150,00**	**PWY 140/155x9,5**
160,00	**175,00**	**9,50**	**170,00**	**PWY 160/175x9,5**
180,00	**195,00**	**9,50**	**190,00**	**PWY 180/195x9,5**
200,00	**215,00**	**9,50**	**210,00**	**PWY 200/215x9,5**

Sizes also available in FPM. Extensive range of inch measurement diagrams available on request.
Dimensions in bold correspond to ISO 6195/A.

Example for ordering Wipers:

PWY 16 / 24 x 5

Type
Rod diameter d
Groove diameter D
Groove width

WARNING: Limits of application stated herein are standard values. They could be individually transgressed with due consideration to respective service conditions. In the event of a large duty cycle, pulsating operation and other complex operational conditions, simultaneous transgression of these values is not recommended. Due to a large variety of service conditions that may arise in course of actual use, the company does not take responsibility of or guarantee the functional accuracy of the individual components. Rights for changes are reserved.

Wiper
PW/F

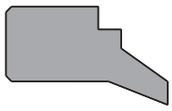

Single acting wiper/scraper PW/F reliably to prevent entry of dirt and water in hydraulic cylinder and can be used in hydraulics as well as in pneumatics.

Special Features:

- Very good wiper/scraper performance
- Anti-wear polyurethane material
- Long life
- Special form of closed seal groove is achieved by a steps on outer diameter
- Easy fitting into groove
- Sealing edge on external diameter prevents entry of dirt over groove base.

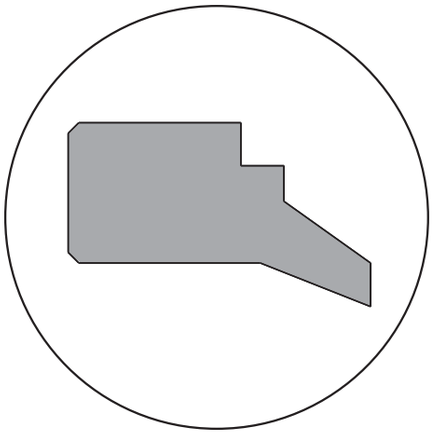

Material: polyurethane
Velocity: reciprocating to 0.8 m/s
Temperature: -40 to +110 °C

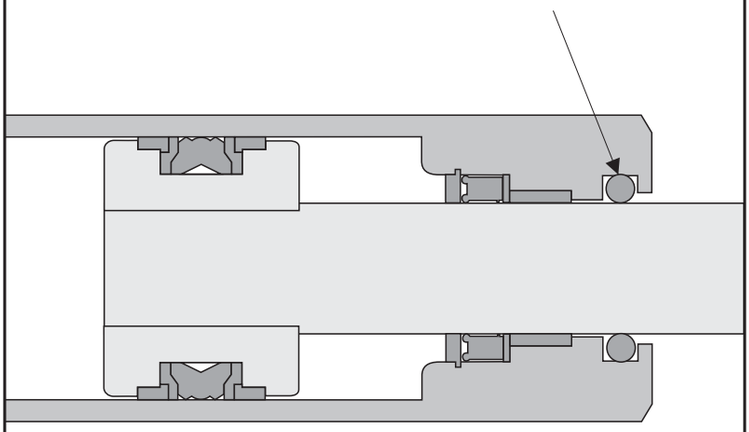

Wiper
PW/F

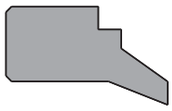

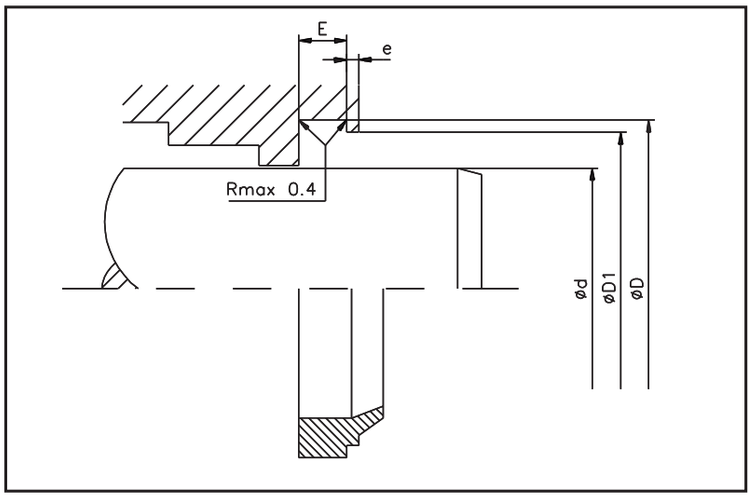

Limitations on Use

Velocity	: reciprocating to 0.8 m/s
Temperature	: -40 bis +110 °C

Media for Use

Mineral oil based hydraulic oils, Bio Oils and flame resistant pressure fluids on request.

Surface Finish

	Rmax	Rz	Ra
Rod diameter d	2,5 µm	1,6 µm	0,4 µm
Groove diameter D	16,0 µm	10,0 µm	3,2 µm
Groove flanks	16,0 µm	10,0 µm	3,2 µm

d f8/h9	D H11	E +0,2	D1 H11	e	Part N°.
16,00	**24,00**	**4,00**	**22,00**	**1,00**	**PW/F 16/24x4**
20,00	**28,00**	**4,00**	**26,00**	**1,00**	**PW/F 20/28x4**
22,00	**30,00**	**4,00**	**28,00**	**1,00**	**PW/F 22/30x4**
25,00	**33,00**	**4,00**	**31,00**	**1,00**	**PW/F 25/33x4**
28,00	**36,00**	**4,00**	**34,00**	**1,00**	**PW/F 28/36x4**
30,00	38,00	4,00	36,00	1,00	PW/F 30/38x4
32,00	**40,00**	**4,00**	**38,00**	**1,00**	**PW/F 32/40x4**
35,00	43,00	4,00	41,00	1,00	PW/F 35/43x4
36,00	**44,00**	**4,00**	**42,00**	**1,00**	**PW/F 36/44x4**
40,00	**48,00**	**4,00**	**46,00**	**1,00**	**PW/F 40/48x4**
42,00	50,00	4,00	48,00	1,00	PW/F 42/50x4
45,00	**53,00**	**4,00**	**51,00**	**1,00**	**PW/F 45/53x4**
50,00	**58,00**	**4,00**	**56,00**	**1,00**	**PW/F 50/58x4**
55,00	63,00	4,00	61,00	1,00	PW/F 55/63x4
56,00	**64,00**	**4,00**	**62,00**	**1,00**	**PW/F 56/64x4**
60,00	68,00	4,00	66,00	1,00	PW/F 60/68x4
63,00	**71,00**	**4,00**	**69,00**	**1,00**	**PW/F 63/71x4**
65,00	73,00	4,00	71,00	1,00	PW/F 65/73x4
70,00	**78,00**	**4,00**	**76,00**	**1,00**	**PW/F 70/78x4**
75,00	83,00	4,00	81,00	1,00	PW/F 75/83x4
80,00	**88,00**	**4,00**	**86,00**	**1,00**	**PW/F 80/88x4**
85,00	93,00	4,00	91,00	1,00	PW/F 85/93x4
90,00	**98,00**	**4,00**	**96,00**	**1,00**	**PW/F 90/98x4**
100,00	**108,00**	**4,00**	**106,00**	**1,00**	**PW/F 100/108x4**
106,00	118,00	5,50	115,00	1,50	PW/F 106/118x5,5
110,00	**122,00**	**5,50**	**119,00**	**1,50**	**PW/F 110/119x5,5**
117,00	129,00	5,50	126,00	1,50	PW/F 117/129x5,5
125,00	**137,00**	**5,50**	**134,00**	**1,50**	**PW/F 125/137x5,5**

Sizes also available in FPM. Extensive range of inch measurement diagrams available on request.
Bold figures correspond to rod diameters as per ISO 3320.

Wiper
PW/F

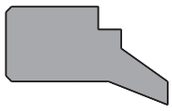

Example for ordering Wipers:

PW/F 20 / 28 x 4

Type
Rod diameter d
Groove diameter D
Groove width

WARNING: Limits of application stated herein are standard values. They could be individually transgressed with due consideration to respective service conditions. In the event of a large duty cycle, pulsating operation and other complex operational conditions, simultaneous transgression of these values is not recommended. Due to a large variety of service conditions that may arise in course of actual use, the company does not take responsibility of or guarantee the functional accuracy of the individual components. Rights for changes are reserved.

Wiper
RSW

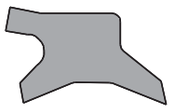

Double acting wiper/scraper RSW reliably prevents entry of water and dirt particles into the hydraulic cylinder. The special profile - wiper/scraper lip on the one side and a groove ring on the other side - achieve special sealing at the side under pressure.

Special Features:

- Outstanding wiper/scraper performance
- Anti wear polyurethane material
- Excellent wiper performance in case of oils on pressure side has low pressure
- Easy snap-in assembly in groove.

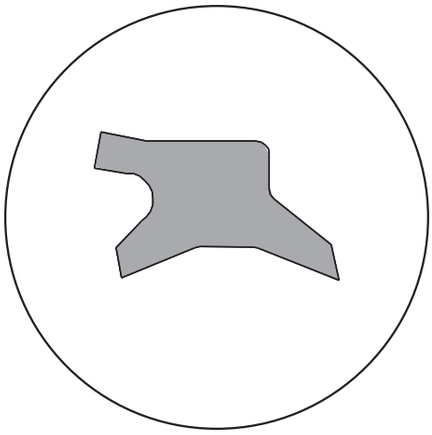

Material: polyurethane
Velocity: reciprocating to 0.8 m/s
Temperature: -40 to +110 °C

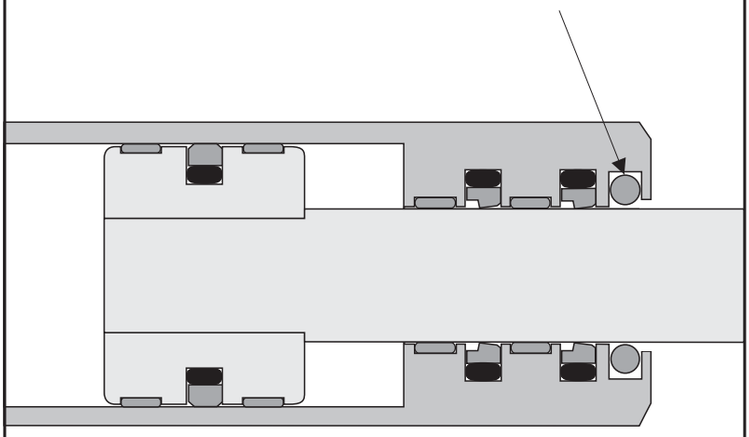

Wiper
RSW

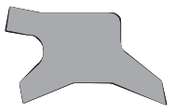

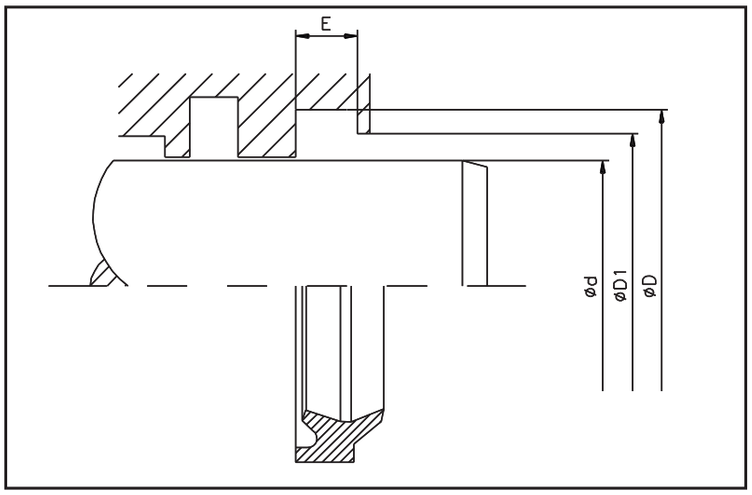

Limitations on Use

Velocity	:	reciprocating to 0.8 m/s
Temperature	:	-40 bis +110 °C

Media for Use

Mineral oil based hydraulic oils, Bio Oils and flame resistant pressure fluids on request.

Surface Finish

	Rmax	Rz	Ra
Rod diameter d	2,5 µm	1,6 µm	0,4 µm
Groove diameter D	16,0 µm	10,0 µm	3,2 µm
Groove flanks	16,0 µm	10,0 µm	3,2 µm

d f8/h9	D H11	E +0,2	D1 H11	Part N°.
12,00	**18,60**	**3,80**	**15,00**	**RSW 12/18,6x3,8**
14,00	**20,60**	**3,80**	**17,00**	**RSW 14/20,6x3,8**
18,00	**24,60**	**3,80**	**21,00**	**RSW 18/24,6x3,8**
20,00	**28,60**	**5,30**	**23,00**	**RSW 20/28,6x5,3**
22,00	**30,60**	**5,30**	**25,00**	**RSW 22/30,6x5,3**
24,00	32,60	5,30	27,00	RSW 24/32,6x5,3
25,00	**33,60**	**5,30**	**28,00**	**RSW 25/33,6x5,3**
28,00	**36,60**	**5,30**	**31,00**	**RSW 28/36,6x5,3**
30,00	38,60	5,30	33,00	RSW 30/38,6x5,3
32,00	**40,60**	**5,30**	**35,00**	**RSW 32/40,6x5,3**
35,00	43,60	5,30	38,00	RSW 35/43,6x5,3
36,00	**44,60**	**5,30**	**39,00**	**RSW 36/44,6x5,3**
40,00	**48,60**	**5,30**	**43,00**	**RSW 40/48,6x5,3**
45,00	**53,60**	**5,30**	**48,00**	**RSW 45/53,6x5,3**
50,00	**58,60**	**5,30**	**53,00**	**RSW 50/58,6x5,3**
55,00	63,60	5,30	58,00	RSW 55/63,6x5,3
56,00	**64,60**	**5,30**	**59,00**	**RSW 56/64,6x5,3**
60,00	68,60	5,30	63,00	RSW 60/68,6x5,3
63,00	**71,60**	**5,30**	**66,00**	**RSW 63/71,6x5,3**
65,00	73,60	5,30	68,00	RSW 65/73,6x5,3
70,00	**78,60**	**5,30**	**73,00**	**RSW 70/78,6x5,3**
75,00	83,60	5,30	78,00	RSW 75/83,6x5,3
80,00	**88,60**	**5,30**	**83,00**	**RSW 80/88,6x5,3**
85,00	97,20	7,10	91,00	RSW 85/97,2x7,1
90,00	**102,20**	**7,10**	**96,00**	**RSW 90/102,2x7,1**
100,00	**112,20**	**7,10**	**106,00**	**RSW 100/112,2x7,1**
110,00	**122,20**	**7,10**	**116,00**	**RSW 110/122,2x7,1**

Further sizes and an extensive range of inch measurement diagrams available on request.
Bold figures correspond to rod diameters as per ISO 3320.

Wiper
RSW

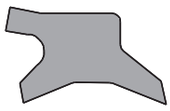

Example for ordering Wipers:

RSW 40 / 48,6x5,3

Type
Rod diameter d
Groove diameter D
Groove width

WARNING: Limits of application stated herein are standard values. They could be individually transgressed with due consideration to respective service conditions. In the event of a large duty cycle, pulsating operation and other complex operational conditions, simultaneous transgression of these values is not recommended. Due to a large variety of service conditions that may arise in course of actual use, the company does not take responsibility of or guarantee the functional accuracy of the individual components. Rights for changes are reserved.

Wiper
PA/PAK

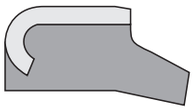

Single acting polyurethane wiper/scraper PA and PAK ensure safe and secure wiper/scraper action under extreme conditions, especially in low temperature application.

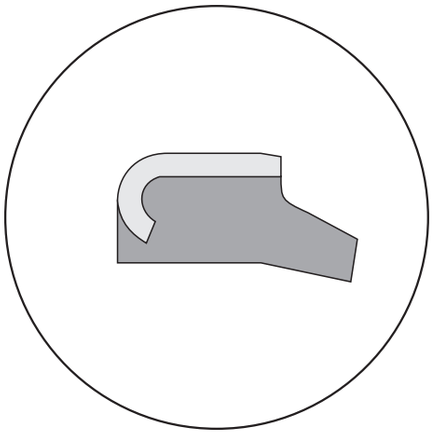

Special Features:

- Anti wear polyurethane
- Good abrasion resistance, long life
- Stability due to polyurethane and metal cage combination
- Easy assembly for press fit.

Material: polyurethane elastomer
Velocity: reciprocating to 0.6 m/s
Temperature: -40 to +100 °C

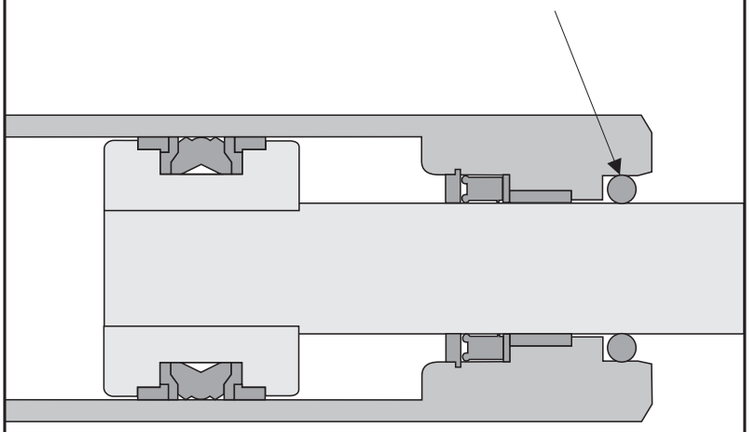

Wiper
PA/PAK

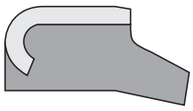

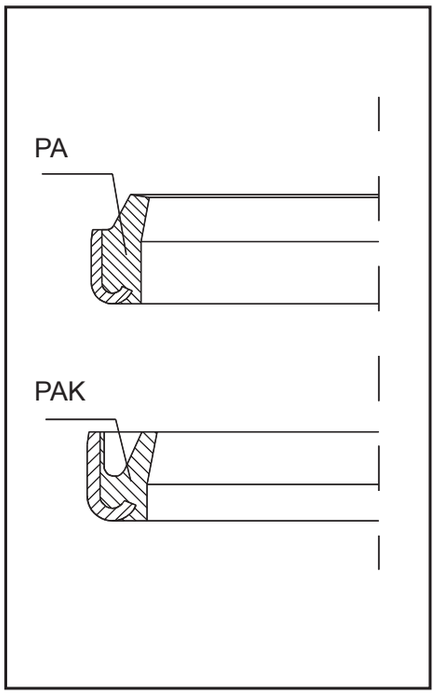

The designs of PA resp. PAK are optimal with respect to wear of NBR metal wipers/scraper. They have proven their superiority, especially in low temperature applications.

Description

Wipers PA and PAK provide exceptional good wiper/scraper the performence is even very high for very contaminated piston rods and also at very low temperatures.

In comparison to designs in NBR, polyurethane wipers/scrapers have much better performence when comparing wear and corrosion, better anti ageing behaviour and therefore a much longer service life of the rod sealing system.

Stick slip behaviour is improved due to optimisation of scraper lip design. The integrated and specially formed metal cage ensures high stability of the wiper by itself. Fatigue strenght of the wiper is very high, turning around the wiper in its groove is not possible with this design.

The drawing to the left shows various designs of both types of wipers: PA with a protruding wiper lip and PAK without a protruding wiper lip. The advantage of PAK is that it is better protected and that it allows for a better length of stroke of piston rod.

Wiper
PA/PAK

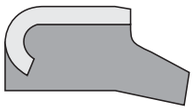

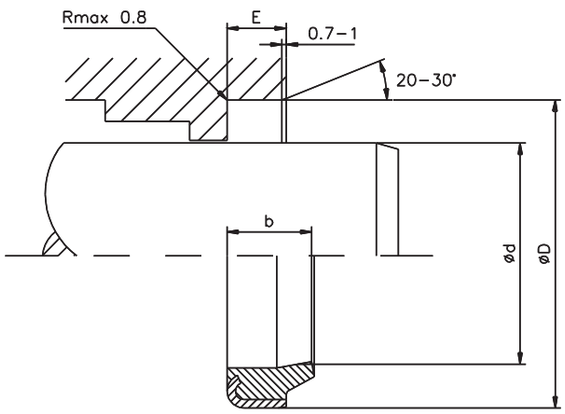

Typ: PAK: b = E

Limitations on Use

Velocity	: reciprocating to 0.6 m/s
Temperature	: -40 bis +100 °C

Media for Use

Mineral oil based hydraulic oils, Bio Oils and flame resistant pressure fluids on request.

Surface Finish

	Rmax	Rz	Ra
Rod diameter d	2,5 µm	1,6 µm	0,4 µm
Groove diameter	16,0 µm	10,0 µm	3,2 µm
Groove flanks	16,0 µm	10,0 µm	3,2 µm

Type PA

d f8/h9	D H8	E +0,2	b	Part N°.
16,00	**22,00**	**4,00**	**6,00**	**PA 16/22x4/6**
20,00	**30,00**	**7,00**	**10,00**	**PA 20/30x7/10**
25,00	**35,00**	**7,00**	**10,00**	**PA 25/35x7/10**
28,00	**38,00**	**7,00**	**10,00**	**PA 28/38x7/10**
30,00	40,00	5,50	10,00	PA 30/40x5,5
30,00	40,00	7,00	10,00	PA 30/40x7/10
32,00	**42,00**	**7,00**	**10,00**	**PA 32/42x7/10**
32,00	**45,00**	**7,00**	**10,00**	**PA 32/45x7/10**
35,00	45,00	7,00	10,00	PA 35/45x7/10
36,00	**45,00**	**7,00**	**10,00**	**PA 36/45x7/10**
36,00	**46,00**	**7,00**	**10,00**	**PA 36/46x7/10**
38,10	50,80	7,00	10,00	PA 38,1/50,8x7/10
40,00	**50,00**	**5,50**	**10,00**	**PA 40/50x5,5/10**
40,00	**50,00**	**7,00**	**10,00**	**PA 40/50x7/10**
45,00	**55,00**	**7,00**	**10,00**	**PA 45/55x7/10**
45,00	**60,00**	**7,00**	**10,00**	**PA 45/60x7/10**
50,00	**60,00**	**7,00**	**10,00**	**PA 50/60x7/10**
50,00	**65,00**	**7,00**	**10,00**	**PA 50/65x7/10**
50,80	63,50	7,00	10,00	PA 50,8/63,5x7/10
55,00	65,00	7,00	10,00	PA 55/65x7/10
55,00	70,00	7,00	10,00	PA 55/70x7/10
56,00	**66,00**	**7,00**	**10,00**	**PA 56/66x7/10**
57,15	70,00	7,00	10,00	PA 57,1/70x7/10
60,00	70,00	7,00	10,00	PA 60/70x7/10
63,00	**73,00**	**7,00**	**10,00**	**PA 63/73x7/10**
63,00	**75,00**	**7,00**	**10,00**	**PA 63/75x7/10**
63,00	**78,00**	**7,00**	**10,00**	**PA 63/78x7/10**
63,50	76,20	7,00	10,00	PA 63,5/76,2x7/10
65,00	75,00	7,00	10,00	PA 65/75x7/10
70,00	**80,00**	**7,00**	**10,00**	**PA 70/80x7/10**
75,00	83,00	7,00	10,00	PA 75/83x7/10
75,00	85,00	7,00	10,00	PA 75/85x7/10
80,00	**90,00**	**7,00**	**10,00**	**PA 80/90x7/10**
85,00	95,00	7,00	10,00	PA 85/95x7/10
90,00	**100,00**	**7,00**	**10,00**	**PA 90/100x7/10**
95,00	105,00	7,00	10,00	PA 95/105x7/10
100,00	**110,00**	**7,00**	**10,00**	**PA 100/110x7/10**
110,00	**120,00**	**7,00**	**10,00**	**PA 110/120x7/10**
105,00	115,00	7,00	10,00	PA 105/115x7/10
120,00	130,00	7,00	12,00	PA 120/130x7/12
125,00	**140,00**	**9,00**	**12,00**	**PA 125/140x9/12**

Type PAK

d f8/h9	D H8	E +0,2	Part N°.
12,00	**20,00**	**4,00**	**PAK 12/20x4**
15,00	21,00	5,00	PAK 15/21x5
15,90	23,00	5,00	PAK 15,9/23x5
20,00	**28,00**	**5,00**	**PAK 20/28x5**
25,00	**32,00**	**7,00**	**PAK 25/32x7**
25,00	**35,00**	**7,00**	**PAK 25/35x7**
30,00	40,00	4,00	PAK 30/40x4
30,00	40,00	4.50	PAK 30/40x4,5
30,00	43,00	7,50	PAK 30/43x7,5
35,00	45,00	4,00	PAK 35/45x4
35,00	45,00	4.50	PAK 35/45x4,5
35,00	50,00	7,50	PAK 35/50x7,5
36,00	**46,00**	**7,00**	**PAK 36/46x7**
36,00	**48,00**	**6,00**	**PAK 36/48x6**
38,00	50,00	7,50	PAK 38/50x7,5
40,00	**50,00**	**4,00**	**PAK 40/50x4**
40,00	**50,00**	**4.50**	**PAK 40/50x4,5**
40,00	**52,00**	**6.00**	**PAK 40/52x6**
45,00	**55,00**	**4,00**	**PAK 45/55x4**
45,00	**55,00**	**5.00**	**PAK 45/55x5**
45,00	**55,00**	**3.20**	**PAK 45/55x3,2**
45,00	**60,00**	**7,50**	**PAK 45/60x7,5**
50,00	**60,00**	**4,00**	**PAK 50/60x4**
50,00	**60,00**	**5,00**	**PAK 50/60x5**
50,00	**60,00**	**7,00**	**PAK 50/60x7**
50,00	**60,00**	**7,00**	**PAK 50/60x7**
50,00	**63,00**	**4,00**	**PAK 50/63x4**
50,00	**65,00**	**7,50**	**PAK 50/65x7,5**
50,80	63,50	7,92	PAK 50,8/63,5x7,9
55,00	65,00	3.20	PAK 55/65x3,2
55,00	68,00	4.00	PAK 55/68x4
55,00	70,00	7.50	PAK 55/70x7,5
56,00	**70,00**	**7.50**	**PAK 56/70x7,5**
57,15	69,85	6,35	PAK 57,1/69,8x6,3
60,00	70,00	7,00	PAK 60/70x7
60,00	75,00	7,50	PAK 60/75x7,5
60,00	75,00	4,00	PAK 60/75x4
63,00	**78,00**	**7,50**	**PAK 63/78x7,5**
63,50	76,50	7,92	PAK 63,5/76,5x7,9
65,00	75,00	7,00	PAK 65/75x7

Wiper
PA/PAK

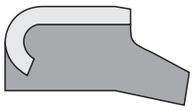

Typ PA

d f8/h9	D H8	E +0,2	b	Part N°.
140,00	**155,00**	**9,00**	**12,00**	**PA 140/155x9/12**
180,00	**195,00**	**9,00**	**12,00**	**PA 180/195x9/12**

Typ PAK

d f8/h9	D H8	E +0,2	Part N°.
65,00	80,00	7,50	PAK 65/80x7,5
65,00	80,00	5,00	PAK 65/80x5
66,60	79,30	7,37	PAK 66,6/79,3x7,4
70,00	**80,00**	**4,50**	**PAK 70/80x4,5**
70,00	**80,00**	**5,00**	**PAK 70/80x5**
70,00	**80,00**	**7,00**	**PAK 70/80x7**
70,00	**84,00**	**8,00**	**PAK 70/84x8**
70,00	**85,00**	**7,50**	**PAK 70/85x7,5**
71,00	86,00	5,00	PAK 71/86x5
75,00	90,00	4,50	PAK 75/90x4,5
75,00	90,00	7,50	PAK 75/90x7,5
75,00	95,00	10,00	PAK 75/95x10
76,50	96,50	10,00	PAK 76,5/96,5x10
80,00	**90,00**	**4,50**	**PAK 80/90x4,5**
80,00	**90,00**	**7,00**	**PAK 80/90x7**
80,00	**95,00**	**6,00**	**PAK 80/95x6**
80,00	**95,00**	**7,00**	**PAK 80/95x7**
80,00	**95,00**	**7,50**	**PAK 80/95x7,5**
80,00	**95,00**	**7,50**	**PAK 80/95x7,5**
80,00	**95,00**	**5,00**	**PAK 80/95x5**
80,00	**100,00**	**10,00**	**PAK 80/100x10**
85,00	95,00	7,00	PAK 85/95x7
85,00	100,00	6,00	PAK 85/100x6
85,00	100,00	10,00	PAK 85/100x10
85,00	100,00	4,00	PAK 85/100x4
85,00	105,00	10,00	PAK 85/105x10
89,00	76,20	7,92	PAK 89/76,2x7,9
90,00	**100,00**	**4,50**	**PAK 90/100x4,5**
90,00	**100,00**	**7,00**	**PAK 90/100x7**
90,00	**104,00**	**8,00**	**PAK 90/104x8**
90,00	**105,00**	**6,00**	**PAK 90/105x6**
90,00	**105,00**	**6,00**	**PAK 90/105x6**
90,00	**110,00**	**10,00**	**PAK 90/110x10**
92,03	79,20	5,85	PAK 92/79,2x5,8
95,00	115,00	10,00	PAK 95/115x10
100,00	**110,00**	**4,50**	**PAK 100/110x4,5**
100,00	**110,00**	**7,00**	**PAK 100/110x7**
100,00	**115,00**	**7,50**	**PAK 100/115x7,5**
100,00	**115,00**	**6,50**	**PAK 100/115x6,5**
100,00	**115,00**	**4,00**	**PAK 100/115x4**
100,00	**120,00**	**10,00**	**PAK 100/120x10**
105,00	120,00	7,50	PAK 105/120x7,5
110,00	**120,00**	**7,00**	**PAK 110/120x7**
110,00	**125,00**	**7,00**	**PAK 110/125x7**
110,00	**125,00**	**9,00**	**PAK 110/125x9**
110,00	**130,00**	**10,00**	**PAK 110/130x10**
115,00	130,00	7,50	PAK 115/130x7,5
120,00	130,00	7,00	PAK 120/130x7
120,00	140,00	10,00	PAK 120/140x10
130,00	140,00	7,00	PAK 130/140x7
130,00	145,00	7,50	PAK 130/145x7,5
140,00	155,00	7,00	PAK 1400/155x7
140,00	155,00	9,00	PAK 140/155x9
150,00	160,00	7,00	PAK 150/160x7
160,00	175,00	10,00	PAK 160/175x10
170,00	185,00	7,00	PAK 170/185x7
190,00	210,00	10,00	PAK 190/210x10

Dimensions in bold correspond to rod diameter ISO 3320.
Extensive range of inch measurement diagrams available on request.

Wiper
PA/PAK

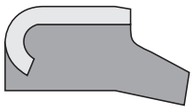

Example for ordering Wipers:

PA 32 / 42 x 7/10

Type
Rod diameter d
Groove diameter D
Groove width

WARNING: Limits of application stated herein are standard values. They could be individually transgressed with due consideration to respective service conditions. In the event of a large duty cycle, pulsating operation and other complex operational conditions, simultaneous transgression of these values is not recommended. Due to a large variety of service conditions that may arise in course of actual use, the company does not take responsibility of or guarantee the functional accuracy of the individual components. Rights for changes are reserved.

Wiper
AF-480

The wiper/scraper AF-480 is used in hydraulic cylinders to wipe the incoming piston rod clean of dirt. Various material combinations ensure high functional security and service life over the entire velocity range and a very low friction, various temperatures and media depending of the O-ring material.

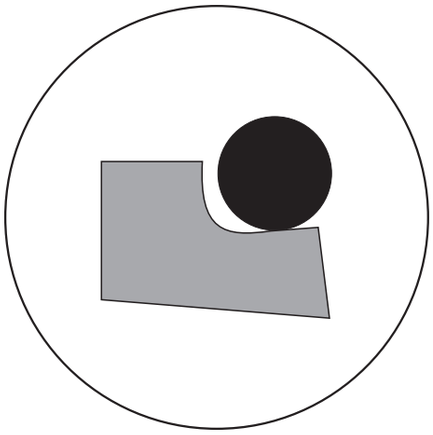

Material: PTFE-Compound and PEHD
Velocity: reciprocating to 15 m/s
Temperature: -40 to + 200 °C, PEHD limit in Temp

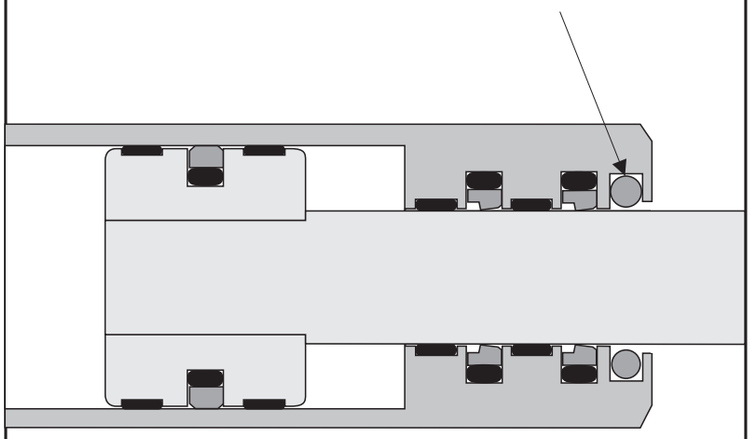

Special Features:

- Two part composition comprising of wiper/scraper ring and O-ring
- Very good wiper/scraper, because it can also wipe away sticky media and dirt
- Outstanding shear strength characteristics, have no stick slip effect
- High abrasion resistance, long life
- Wide temperature range and high chemical resistance depending on O-ring material
- Available for rod diameter up to approx. 2500 mm.

Wiper
AF-480

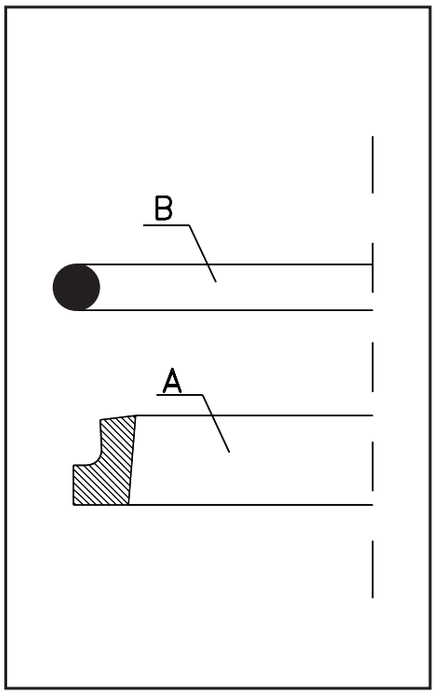

Wiper Ring (Part A)

The wiper/scraper possesses a sturdy profile with a wiper lip protruding on the air side. There exists a radie on the outermost circumference in order to be able to fit O-ring.

Wiper/scraper rings are manufactured from specially modified PTFE materials. The compound AF-5640 (PTFE bronze) is standard material of construction (MOC) that is used in hydraulics applications. This material is particularly superior in respect of very high abrasion resistance, extrusion resistant, very good shearing characteristics and very good thermal and chemical resistance.

O-Ring (Part B)

O-rings are standard sealing elements with circular cross section. Those used in the present application conform to the series of dimensions as per AS 568 A (American norm).

Standard MOC for hydraulics is NBR (acrylonitrile butadiene rubber) with 70 Shore A, which guarantees particularly good resistance to hydraulic fluids.

Materials Overview: Wiper Ring

AF-1012: Virgin PTFE - outstanding chemical resistance - used in chemical, foodindustry and pharmaceutical industry with light mechanical stress.
AF-1022: Very good chemical resistance, outstanding shear characteristics, special purpose and intermediate stress applications.
AF-4115: PTFE with Glass fibre/lubricant - high abrasion resistance and inherent stability, good chemical resistance, used in various areas of industry and intermediatestress hydraulic applications.
AF-2426: PTFE with Carbon: good abrasion resistance and inherent stability, good chemical resistance, used in water and water-oil emulsions with intermediate stress. Also designed for dry runs.
AF-5640: PTFE with Bronze/additive: high abrasion resistance and inherent stability, very good shear characteristics, good chemical resistance, used in intermediate to high stress hydraulics application.
AF-1111: PTFE with Econol - very high abrasion resistance and inherent stability, used in hydraulics and abrasive pressure fluid applications.
AF-8172: PUR - very high abrasion resistance and inherent stability, used primarily in intermediate stress hydraulics applications.
AF-7710: PEHD 1000 - very high abrasion resistance and inherent stability, has a strong lip, with very good scraper effect. Has a limit in temperature maximum 80°C

Materials Overview: O-Ring

N: Acrylonitrile butadiene rubber - Used in general machine construction, hydraulics, pneumatics. Resistant to mineral oil based pressure fluids, HFA, HFB and HFC fluids and water.

F: Fluorine containing rubbers - Used at high temperatures and aggressive surrounding media, resistant to mineral based and synthetic pressure fluids, aliphatic, aromatic and chlorated hydrocarbons, phosphate-ester based poorly inflammable fluids.

E: Ethylene propylene diene rubbers - Used in armature and pump industry. Resistant to hot water, steam, phosphate-ester based poorly inflammable fluids but is not resistant to mineral oils!

S: Silicon rubbers.

C: Chloroprene rubbers.

The wiper/scraper series AF-480 has been used for many years in hydraulic cylinders. It is meant for particularly robust applications like civil engineering and construction machinery, where high degree of dust attack is encountered.
The wiper can be used in divided and undivided grooves (rod diameter over 30 mm fo rundivided grooves).
For use in an undivided groove, the wiper ring must carefully bent to a kidney shape. The ring is then further prised apart through a

Wiper
AF-480

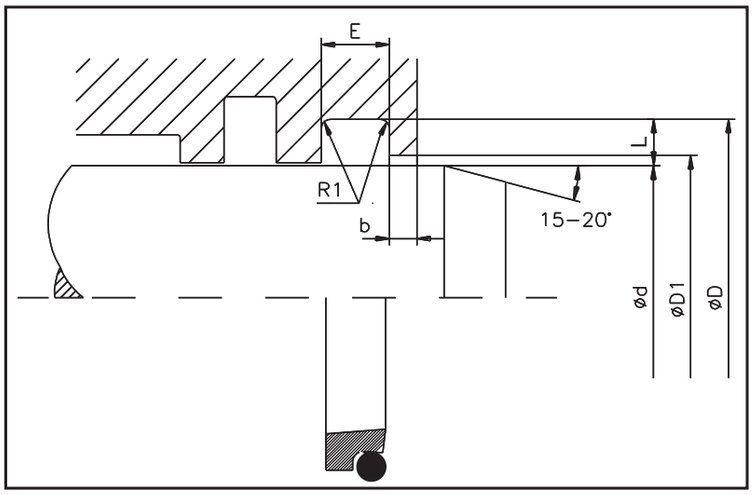

Limitations on Use

Velocity : reciprocating to 15 m/s
Temperature : -40 to +200 °C
(depending on O-ring material)

Media for Use

Mineral oil based pressure fluids, flame resistant fluids (HFA, HFB, HFC), non-polluting pressure fluids (Bio Oils), water, air and other media (depending O-ring material).

Surface Finish

Surfaces	Rmax	Rz	Ra
Rod diameter d	2,5 µm	1,6 µm	0,4 µm
Groove diameter D	10,0 µm	6,3 µm	1,6 µm
Groove flanks	16,0 µm	10,0 µm	3,2 µm

Recommended sizes for Installation

Section	O-Ring cross-section-ø mm	Recommended Diameter Standard D mm	Groove Width E mm	Groove Depth L mm	Radius R1 max. mm	Bar Width b mm
A	1,78	6 - 11,9	3,7	2,4	0,4	2,0
B	2,62	12 - 64,9	5,0	3,4	0,4	2,0
C	3,53	65 - 250,9	6,0	4,4	0,4	3,0
D	5,33	251 - 420,9	8,4	6,1	0,4	3,0
E	7,00	421 - 650,9	11,0	8,0	0,4	4,0
F	8,40	651 -	14,0	10,0	0,4	5,0

d f8/h9	D H10	E +0,2	D1 +0,2	O-Ring	Part N°.
6,00	**10,80**	**3,70**	**8,70**	**011**	**AF-480-0060-A-5640N**
8,00	**12,80**	**3,70**	**10,70**	**012**	**AF-480-0080-A-5640N**
10,00	**14,80**	**3,70**	**12,70**	**013**	**AF-480-0100-A-5640N**
12,00	**18,80**	**5,00**	**15,50**	**113**	**AF-480-0120-B-5640N**
14,00	**20,80**	**5,00**	**17,50**	**115**	**AF-480-0140-B-5640N**
15,00	21,80	5,00	18,50	115	AF-480-0150-B-5640N
16,00	**22,80**	**5,00**	**19,50**	**116**	**AF-480-0160-B-5640N**
18,00	**24,80**	**5,00**	**21,50**	**117**	**AF-480-0180-B-5640N**
20,00	**26,80**	**5,00**	**23,50**	**118**	**AF-480-0200-B-5640N**
22,00	**28,80**	**5,00**	**25,50**	**120**	**AF-480-0220-B-5640N**
25,00	**31,80**	**5,00**	**28,50**	**121**	**AF-480-0250-B-5640N**
26,00	32,80	5,00	29,50	122	AF-480-0260-B-5640N
28,00	**34,80**	**5,00**	**31,50**	**123**	**AF-480-0280-B-5640N**
30,00	36,80	5,00	33,50	125	AF-480-0300-B-5640N
32,00	**38,80**	**5,00**	**35,50**	**126**	**AF-480-0320-B-5640N**
35,00	41,80	5,00	38,50	127	AF-480-0350-B-5640N
36,00	**42,80**	**5,00**	**39,50**	**129**	**AF-480-0360-B-5640N**
37,00	43,80	5,00	40,50	129	AF-480-0370-B-5640N
38,00	44,80	5,00	41,50	130	AF-480-0380-B-5640N
40,00	**46,80**	**5,00**	**43,50**	**131**	**AF-480-0400-B-5640N**
42,00	48,80	5,00	45,50	132	AF-480-0420-B-5640N
45,00	**51,80**	**5,00**	**48,50**	**134**	**AF-480-0450-B-5640N**
48,00	54,80	5,00	51,50	136	AF-480-0480-B-5640N
50,00	**56,80**	**5,00**	**53,50**	**137**	**AF-480-0500-B-5640N**
52,00	58,80	5,00	55,50	138	AF-480-0520-B-5640N
55,00	61,80	5,00	58,50	140	AF-480-0550-B-5640N
56,00	**62,80**	**5,00**	**59,50**	**141**	**AF-480-0560-B-5640N**
58,00	64,80	5,00	61,50	142	AF-480-0580-B-5640N

Wiper
AF-480

d f8/h9	D H10	E +0,2	D1 +0,2	O-Ring	Part N°.
60,00	66,80	5,00	63,50	143	AF-480-0600-B-5640N
63,00	**69,80**	**5,00**	**66,50**	**145**	**AF-480-0630-B-5640N**
65,00	73,80	6,00	69,00	231	AF-480-0650-C-5640N
70,00	**78,80**	**6,00**	**74,00**	**233**	**AF-480-0700-C-5640N**
75,00	83,80	6,00	79,00	235	AF-480-0750-C-5640N
80,00	**88,80**	**6,00**	**84,00**	**236**	**AF-480-0800-C-5640N**
85,00	93,80	6,00	89,00	238	AF-480-0850-C-5640N
90,00	**98,80**	**6,00**	**94,00**	**239**	**AF-480-0900-C-5640N**
95,00	103,80	6,00	99,00	241	AF-480-0950-C-5640N
100,00	**108,80**	**6,00**	**104,00**	**243**	**AF-480-1000-C-5640N**
105,00	113,80	6,00	109,00	244	AF-480-1050-C-5640N
110,00	**118,80**	**6,00**	**114,00**	**246**	**AF-480-1100-C-5640N**
115,00	123,80	6,00	119,00	247	AF-480-1150-C-5640N
120,00	128,80	6,00	124,00	249	AF-480-1200-C-5640N
125,00	**133,80**	**6,00**	**129,00**	**250**	**AF-480-1250-C-5640N**
130,00	138,80	6,00	134,00	252	AF-480-1300-C-5640N
135,00	143,80	6,00	139,00	253	AF-480-1350-C-5640N
140,00	**148,80**	**6,00**	**144,00**	**255**	**AF-480-1400-C-5640N**
150,00	158,80	6,00	154,00	258	AF-480-1500-C-5640N
155,00	163,80	6,00	159,00	259	AF-480-1550-C-5640N
160,00	**168,80**	**6,00**	**164,00**	**260**	**AF-480-1600-C-5640N**
170,00	178,80	6,00	174,00	261	AF-480-1700-C-5640N
175,00	183,80	6,00	179,00	262	AF-480-1750-C-5640N
180,00	**188,80**	**6,00**	**184,00**	**263**	**AF-480-1800-C-5640N**
185,00	193,80	6,00	189,00	263	AF-480-1850-C-5640N
190,00	198,80	6,00	194,00	264	AF-480-1900-C-5640N
195,00	203,80	6,00	199,00	265	AF-480-1950-C-5640N
200,00	**208,80**	**6,00**	**204,00**	**266**	**AF-480-2000-C-5640N**
210,00	218,80	6,00	214,00	267	AF-480-2100-C-5640N
220,00	**228,80**	**6,00**	**224,00**	**269**	**AF-480-2200-C-5640N**
225,00	233,80	6,00	229,00	270	AF-480-2250-C-5640N
230,00	238,80	6,00	234,00	271	AF-480-2300-C-5640N
240,00	248,80	6,00	244,00	272	AF-480-2400-C-5640N
250,00	**258,80**	**6,00**	**254,00**	**274**	**AF-480-2500-C-5640N**
260,00	272,20	8,40	264,50	377	AF-480-2600-D-5640N
270,00	282,20	8,40	274,50	378	AF-480-2700-D-5640N
280,00	**292,20**	**8,40**	**284,50**	**379**	**AF-480-2800-D-5640N**
290,00	302,20	8,40	294,50	380	AF-480-2900-D-5640N
300,00	312,20	8,40	304,50	381	AF-480-3000-D-5640N
310,00	322,20	8,40	314,50	381	AF-480-3100-D-5640N
320,00	**332,20**	**8,40**	**324,50**	**382**	**AF-480-3200-D-5640N**
330,00	342,20	8,40	334,50	382	AF-480-3300-D-5640N
340,00	352,20	8,40	344,50	382	AF-480-3400-D-5640N
350,00	362,20	8,40	354,50	383	AF-480-3500-D-5640N
360,00	**372,20**	**8,40**	**364,50**	**383**	**AF-480-3600-D-5640N**
370,00	382,20	8,40	374,50	383	AF-480-3700-D-5640N
380,00	392,20	8,40	384,50	384	AF-480-3800-D-5640N
390,00	402,20	8,40	394,50	384	AF-480-3900-D-5640N
400,00	412,20	8,40	404,50	385	AF-480-4000-D-5640N
410,00	422,20	8,40	414,50	385	AF-480-4100-D-5640N
420,00	432,20	8,40	424,50	386	AF-480-4200-D-5640N
430,00	446,00	11,00	435,20	463	AF-480-4300-E-5640N
440,00	456,00	11,00	445,20	464	AF-480-4400-E-5640N
450,00	466,00	11,00	455,20	465	AF-480-4500-E-5640N
460,00	476,00	11,00	465,20	466	AF-480-4600-E-5640N
470,00	486,00	11,00	475,20	466	AF-480-4700-E-5640N
480,00	496,00	11,00	485,20	467	AF-480-4800-E-5640N
490,00	506,00	11,00	495,20	468	AF-480-4900-E-5640N

Further sizes up to Ø 2500 mm available on request.
Sizes in bold correspond to rod diameter as per DIN ISO 3320.

Wiper
AF-480

Example for ordering Wipers:

AF-480 - 0360- B-5640N

Type
Nominal diameter x 10
Cross-section
Wiper material
Standard material O-Ring

Material Key:

Dynamic slide ring
AF-1012 - Virgin PTFE
AF-1022 - PTFE with additive
AF-1024 - PTFE with additive (FDA)
AF-4115 - PTFE with glass fibre
AF-2426 - PFTE with carbon
AF-5640 - PTFE with bronze/additive
AF-1111 - PTFE with Econol
AF-8172 - PUR
AF-7710 - UHMW-PE (PEHD) (FD

O-Ring
N -NBR
F - FPM
E - EPDM
S - Silicone
C -Chloropren

WARNING: Limits of application stated herein are standard values. They could be individually transgressed with due consideration to respective service conditions. In the event of a large duty cycle, pulsating operation and other complex operational conditions, simultaneous transgression of these values is not recommended. Due to a large variety of service conditions that may arise in course of actual use, the company does not take responsibility of or guarantee the functional accuracy of the individual components. Rights for changes are reserved.

Double Acting Wiper
AF-485

Double acting wiper/scraper AF-485 is used in hydraulic cylinders to wipe the incoming piston rod clean of dirt, water etc. Various material combinations guarantee a high functional security and service life over the entire velocity range even with low friction, and it can also be used various temperatures and media.

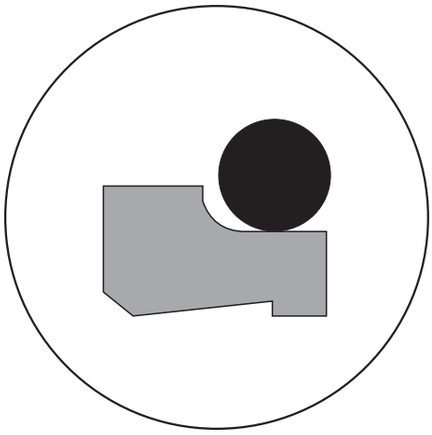

Special Features:

- Two part composition consisting of wiper/scraper seal and O-ring
- A good wiper/scraper, because it also wipe away sticky media due to sharp lip and strong interference fit of the piston rod.
- Very good internal wiper/scraper performance for residual oil film that accumulates on the piston rod shall be removed
- Outstanding shear strength characteristics, without stick slip effect
- Good wear resistance, long life
- Wide temperature range and chemical resistance depending on O-ring material
- Available for all piston rods diameters up to approx. 2500 mm.

Material: PTFE-Compound and PEHD
Velocity: reciprocating to 15 m/s
Temperature: -40 to + 200 °C, PEHD limit in Temp

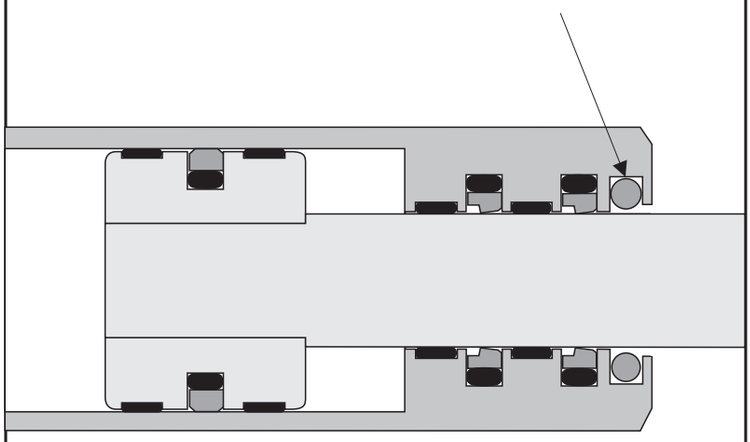

Double Acting Wiper
AF-485

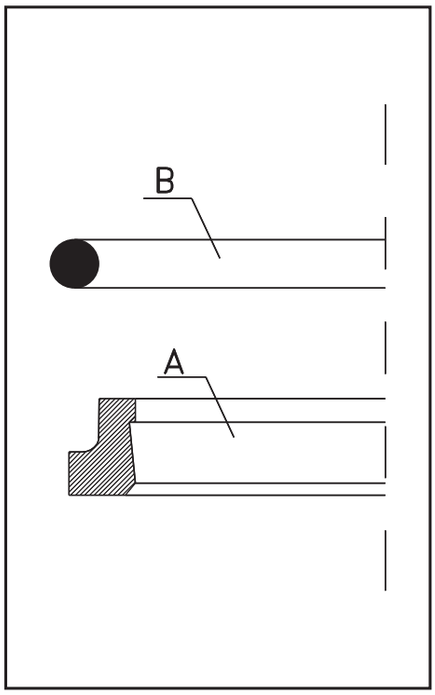

Wiper Ring (Part A)

The wiper/scraper possesses a sturdy profile with a wiper lip protruding on atmosphere side. There exists a radie on the outermost circumference in order to be able to fit O-ring.

Wiper/scraper rings are manufactured from specially modified PTFE materials. The compounded material 5640 (PTFE bronze) is a standard material in seals (MOC) that is used in hydraulic applications. This material is superior in respect of very high abrasion resistance, inherent stability, good shear strength and very good thermal and chemical resistance.

O-Ring (Part B)

O-rings are standard sealing elements with circular cross section. Those used in the present application conform to the series of dimensions as per AS 568 A (American norm). Standard MOC for hydraulics applications is NBR with 70 Shore A, which guarantees particularly good resistance to hydraulic fluids.

Materials Overview:

AF-1012: Virgin PTFE - outstanding chemical resistance - used in chemical, foodindustry and pharmaceutical industry with light mechanical stress.
AF-1022: PTFE with additive - Very good chemical resistance, outstanding shear characteristics, special purpose and intermediate stress applications.
AF-4115: PTFE with Glass fibre/lubricant - high abrasion resistance and inherent stability, good chemical resistance, used in various areas of industry and intermediatestress hydraulic applications.
AF-2426: PTFE with Carbon - good abrasion resistance and inherent stability, good chemical resistance, used in water and water-oil emulsions with intermediate stress. Also designed for dry runs.
AF-5640: PTFE with Bronze/additive - high abrasion resistance and inherent stability, very good shear characteristics, good chemical resistance, used in intermediate to high stress hydraulics application.
AF-1111: PTFE with Econol - very high abrasion resistance and inherent stability, used in hydraulics and abrasive pressure fluid applications.
AF-8172: PUR - very high abrasion resistance and inherent stability, used primarily in intermediate stress hydraulics applications.

The wiper/scraper series AF-485 has been used for many years in hydraulic cylinders. On the basis of its double function as a seal on the inside and wiper/scraper on the outside (atmosphere side), it is generally used together with a piston rod seal AF-441.

The sealing and wiper function allows a nearly leakage free rod sealing, even in the case of highly loaded hydraulic cylinders and rough environments.

The wiper/scraper can be used in closed and split (rod diameter approx. 30 mm onwards) grooves. For use in closed grooves, the profile ring must be carefully bent to a kidney shape.

Materials Overview: O-Ring

N: Acrylonitrile butadiene rubber - Used in general machine construction, hydraulics, pneumatics. Resistant to mineral oil based pressure fluids, HFA, HFB and HFC fluids and water.

F: Fluorine containing rubbers - Used at high temperatures and aggressive surrounding media, resistant to mineral based and synthetic pressure fluids, aliphatic, aromatic and chlorated hydrocarbons, phosphate-ester based poorly inflammable fluids.

E: Ethylene propylene diene rubbers - Used in armature and pump industry. Resistant to hot water, steam, phosphate-ester based poorly inflammable fluids but is not resistant to mineral oils!

S: Silicone rubbers.

C: Chloroprene rubbers.

Double Acting Wiper
AF-485

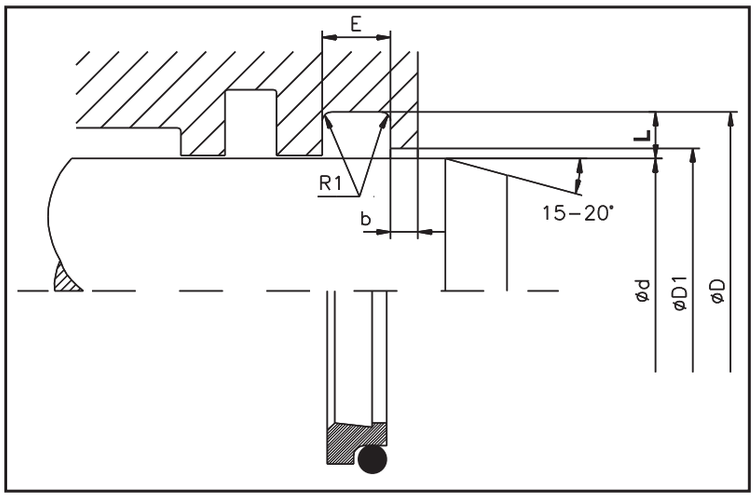

Limitations on Use

Velocity : reciprocating to 15 m/s
Temperature : -40 to +200 °C
(depending on O-ring material)

Media for Use

Mineral oil based pressure fluids, flame resistant fluids (HFA, HFB, HFC), non-polluting pressure fluids (Bio Oils), water, air and other media (depending O-ring material).

Surface Finish

Surfaces	Rmax	Rz	Ra
Rod diameter d	2,5 µm	1,6 µm	0,4 µm
Groove diameter D	10,0 µm	6,3 µm	1,6 µm
Groove flanks	16,0 µm	10,0 µm	3,2 µm

Recommended Sizes for Installation

Section	O-Ring cross-section ø mm	Recommended Diameter Standard D mm	Groove Width E mm	Groove Depth L mm	Radius R1 max. mm	Bar Width b mm
A	1,78	6 - 11,9	3,7	2,4	0,4	2,0
B	2,62	12 - 64,9	5,0	3,4	0,4	2,0
C	3,53	65 - 250,9	6,0	4,4	0,4	3,0
D	5,33	251 - 420,9	8,4	6,1	0,4	4,0
E	7,00	421 - 650,9	11,0	8,0	0,4	5,0
F	8,40	651 -	14,0	10,0	0,4	

d f8/h9	D H10	E +0,2	D1 +0,2	O-Ring	Part N°.
6,00	**10,80**	**3,70**	**7,50**	**011**	**AF-485-0060-A-5640N**
8,00	**12,80**	**3,70**	**9,50**	**012**	**AF-485-0080-A-5640N**
10,00	**14,80**	**3,70**	**11,50**	**013**	**AF-485-0100-A-5640N**
12,00	**18,80**	**5,00**	**13,50**	**113**	**AF-485-0120-B-5640N**
14,00	**20,80**	**5,00**	**15,50**	**115**	**AF-485-0140-B-5640N**
15,00	21,80	5,00	16,50	115	AF-485-0150-B-5640N
16,00	**22,80**	**5,00**	**17,50**	**116**	**AF-485-0160-B-5640N**
18,00	**24,80**	**5,00**	**19,50**	**117**	**AF-485-0180-B-5640N**
20,00	**26,80**	**5,00**	**21,50**	**118**	**AF-485-0200-B-5640N**
22,00	**28,80**	**5,00**	**23,50**	**120**	**AF-485-0220-B-5640N**
25,00	**31,80**	**5,00**	**26,50**	**122**	**AF-485-0250-B-5640N**
26,00	32,80	5,00	27,50	122	AF-485-0260-B-5640N
28,00	**34,80**	**5,00**	**29,50**	**123**	**AF-485-0280-B-5640N**
30,00	36,80	5,00	31,50	125	AF-485-0300-B-5640N
32,00	**38,80**	**5,00**	**33,50**	**126**	**AF-485-0320-B-5640N**
35,00	41,80	5,00	36,50	128	AF-485-0350-B-5640N
36,00	**42,80**	**5,00**	**37,50**	**129**	**AF-485-0360-B-5640N**
37,00	43,80	5,00	38,50	129	AF-485-0370-B-5640N
38,00	44,80	5,00	39,50	130	AF-485-0380-B-5640N
40,00	**46,80**	**5,00**	**41,50**	**131**	**AF-485-0400-B-5640N**
42,00	48,80	5,00	43,50	132	AF-485-0420-B-5640N
45,00	**51,80**	**5,00**	**46,50**	**134**	**AF-485-0450-B-5640N**
48,00	54,80	5,00	49,50	136	AF-485-0480-B-5640N
50,00	**56,80**	**5,00**	**51,50**	**137**	**AF-485-0500-B-5640N**
52,00	58,80	5,00	53,50	138	AF-485-0520-B-5640N
55,00	61,80	5,00	56,50	140	AF-485-0550-B-5640N
56,00	**62,80**	**5,00**	**57,50**	**141**	**AF-485-0560-B-5640N**
58,00	64,80	5,00	59,50	142	AF-485-0580-B-5640N

Double Acting Wiper
AF-485

d f8/h9	D H10	E +0,2	D1 +0,2	O-Ring	Part N°.
60,00	66,80	5,00	61,50	143	AF-485-0600-B-5640N
63,00	**69,80**	**5,00**	**64,50**	**145**	**AF-485-0630-B-5640N**
65,00	73,80	6,00	66,50	231	AF-485-0650-C-5640N
70,00	**78,80**	**6,00**	**71,50**	**233**	**AF-485-0700-C-5640N**
75,00	83,80	6,00	76,50	235	AF-485-0750-C-5640N
80,00	**88,80**	**6,00**	**81,50**	**236**	**AF-485-0800-C-5640N**
85,00	93,80	6,00	86,50	238	AF-485-0850-C-5640N
90,00	**98,80**	**6,00**	**91,50**	**239**	**AF-485-0900-C-5640N**
95,00	103,80	6,00	96,50	241	AF-485-0950-C-5640N
100,00	**108,80**	**6,00**	**101,50**	**243**	**AF-485-1000-C-5640N**
105,00	113,80	6,00	106,50	244	AF-485-1050-C-5640N
110,00	**118,80**	**6,00**	**111,50**	**246**	**AF-485-1100-C-5640N**
115,00	123,80	6,00	116,50	247	AF-485-1150-C-5640N
120,00	128,80	6,00	121,50	249	AF-485-1200-C-5640N
125,00	**133,80**	**6,00**	**126,50**	**250**	**AF-485-1250-C-5640N**
130,00	138,80	6,00	131,50	252	AF-485-1300-C-5640N
135,00	143,80	6,00	136,50	253	AF-485-1350-C-5640N
140,00	**148,80**	**6,00**	**141,50**	**255**	**AF-485-1400-C-5640N**
150,00	158,80	6,00	151,50	258	AF-485-1500-C-5640N
155,00	163,80	6,00	156,50	259	AF-485-1550-C-5640N
160,00	**168,80**	**6,00**	**161,50**	**260**	**AF-485-1600-C-5640N**
170,00	178,80	6,00	171,50	261	AF-485-1700-C-5640N
175,00	183,80	6,00	176,50	262	AF-485-1750-C-5640N
180,00	**188,80**	**6,00**	**181,50**	**263**	**AF-485-1800-C-5640N**
185,00	193,80	6,00	186,50	263	AF-485-1850-C-5640N
190,00	198,80	6,00	191,50	264	AF-485-1900-C-5640N
195,00	203,80	6,00	196,50	265	AF-485-1950-C-5640N
200,00	**208,80**	**6,00**	**201,50**	**266**	**AF-485-2000-C-5640N**
210,00	218,80	6,00	211,50	267	AF-485-2100-C-5640N
220,00	**228,80**	**6,00**	**221,50**	**269**	**AF-485-2200-C-5640N**
225,00	233,80	6,00	226,50	270	AF-485-2250-C-5640N
230,00	238,80	6,00	231,50	271	AF-485-2300-C-5640N
240,00	248,80	6,00	241,50	272	AF-485-2400-C-5640N
250,00	**258,80**	**6,00**	**251,50**	**274**	**AF-485-2500-C-5640N**
260,00	272,20	8,40	262,00	378	AF-485-2600-D-5640N
270,00	282,20	8,40	272,00	378	AF-485-2700-D-5640N
280,00	**292,20**	**8,40**	**282,00**	**379**	**AF-485-2800-D-5640N**
290,00	302,20	8,40	292,00	380	AF-485-2900-D-5640N
300,00	312,20	8,40	302,00	381	AF-485-3000-D-5640N
310,00	322,20	8,40	312,00	381	AF-485-3100-D-5640N
320,00	**332,20**	**8,40**	**322,00**	**382**	**AF-485-3200-D-5640N**
330,00	342,20	8,40	332,00	382	AF-485-3300-D-5640N
340,00	352,20	8,40	342,00	382	AF-485-3400-D-5640N
350,00	362,20	8,40	352,00	383	AF-485-3500-D-5640N
360,00	**372,20**	**8,40**	**362,00**	**383**	**AF-485-3600-D-5640N**
370,00	382,20	8,40	372,00	383	AF-485-3700-D-5640N
380,00	392,20	8,40	382,00	384	AF-485-3800-D-5640N
390,00	402,20	8,40	392,00	384	AF-485-3900-D-5640N
400,00	412,20	8,40	402,00	385	AF-485-4000-D-5640N
410,00	422,20	8,40	412,00	385	AF-485-4100-D-5640N
420,00	432,20	8,40	422,00	386	AF-485-4200-D-5640N
430,00	446,00	11,00	432,00	463	AF-485-4300-E-5640N
440,00	456,00	11,00	442,00	464	AF-485-4400-E-5640N
450,00	466,00	11,00	452,00	465	AF-485-4500-E-5640N
460,00	476,00	11,00	462,00	466	AF-485-4600-E-5640N
470,00	486,00	11,00	472,00	466	AF-485-4700-E-5640N
480,00	496,00	11,00	482,00	467	AF-485-4800-E-5640N
490,00	506,00	11,00	492,00	468	AF-485-4900-E-5640N

Further sizes up to Ø 2500 mm available on request.
Sizes in bold correspond to rod diameter as per DIN ISO 3320.

Double Acting Wiper

AF-485

Example for ordering Wipers:

AF-485 - 0360-B-5640N

Type
Nominal diameter x 10
Cross-section
Wiper material
Standard material O-Ring

Material Key:

Dynamic slide ring
AF-1012 - Virgin PTFE
AF-1022 - PTFE with additive
AF-4115 - PTFE with glass fibre
AF-2426 - PFTE with carbon
AF-5640 - PTFE with bronze/additive
AF-1111 - PTFE with Econol
AF-8172 - PUR

O-Ring
N -NBR
F - FPM
E - EPDM
S - Silicone
C - Chloroprene

WARNING: Limits of application stated herein are standard values. They could be individually transgressed with due consideration to respective service conditions. In the event of a large duty cycle, pulsating operation and other complex operational conditions, simultaneous transgression of these values is not recommended. Due to a large variety of service conditions that may arise in course of actual use, the company does not take responsibility of or guarantee the functional accuracy of the individual components. Rights for changes are reserved.

Double Acting Wiper

AF-487

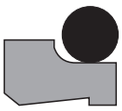

Double acting wiper/scraper AF-487 is used in hydraulic cylinders to wipe of the incoming piston rod clean,dirt ,water etc. It is also minimises the thickness of the oil film on the outgoing piston rod. Various material combinations guarantee a high functional security and service life over the entire velocity range, and is also giving a low friction, manage high and low temperatures and lot of different fluids.

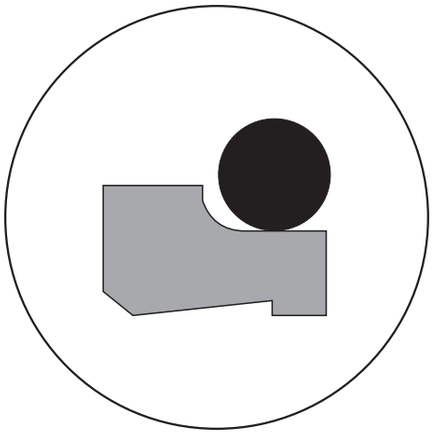

Material: PTFE-Compound and PEHD
Velocity: reciprocating to 15 m/s
Temperature: -40 to + 200 °C, PEHD limit in Temp

Special Features:

- Two part composition consisting of wiper/scraper seal and O-ring
- A good wiper/scraper, because it also wipes away sticky media due to sharp lip and strong interference fit of the piston rod.
- Very good internal wiper/scraper performance for removing oil film that accumulates on the piston rod shall be removed
- Outstanding shear strength characteristics, without stick slip effect
- Good wear resistance, long life
- Wide temperature range and chemical resistance depending on O-ring material
- Available for all piston rods diameters up to approx. 2500 mm.

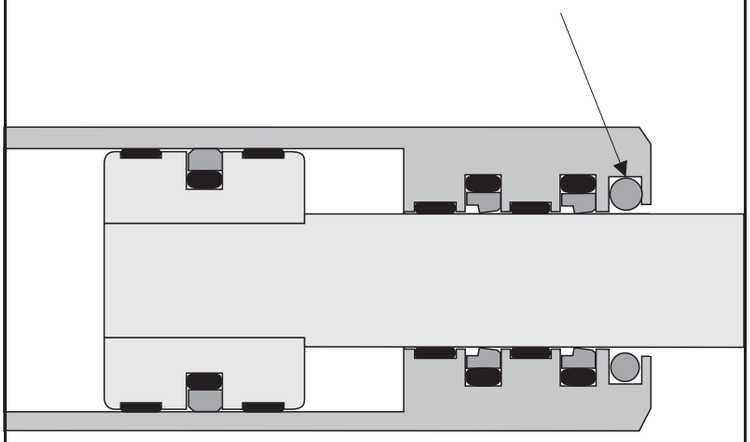

Double Acting Wiper
AF-487

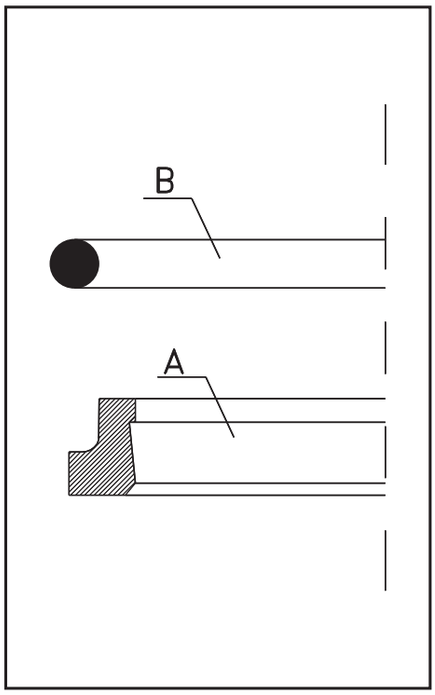

Wiper Ring (Part A)

The wiper possess two geometrically different wiper lips which are arranged in an opposite way. There exists a recess on the outermost circumference in order to be able to incorporate O-ring.

Wiper rings are manufactured from specially modified PTFE materials. Compound AF-5640 (PTFE bronze) is the standard material of construction (MOC) that is used in hydraulic applications. This material is particularly superior in respect of very high abrasion resistance, inherent stability, very good shearing characteristics and very good thermal and chemical resistance.

O-Ring (Part B)

O-rings are standard sealing elements with circular cross section. Those used in the present application conform to the series of dimensions as per AS 568 A (American norm). Standard MOC for hydraulic applications is NBR with 70 Shore A, which guarantees particularly good resistance to hydraulic fluids.

Materials Overview:

AF-1012: Virgin PTFE - outstanding chemical resistance - used in chemical, foodindustry and pharmaceutical industry with light mechanical stress.
AF-1022: Very good chemical resistance, outstanding shear characteristics, special purpose and intermediate stress applications.
AF-4115: PTFE with Glass fibre/lubricant - high abrasion resistance and inherent stability, good chemical resistance, used in various areas of industry and intermediatestress hydraulic applications.
AF-2426: PTFE with Carbon: good abrasion resistance and inherent stability, good chemical resistance, used in water and water-oil emulsions with intermediate stress. Also designed for dry runs.
AF-5640: PTFE with Bronze/additive: high abrasion resistance and inherent stability, very good shear characteristics, good chemical resistance, used in intermediate to high stress hydraulics application.
AF-1111: PTFE with Econol - very high abrasion resistance and inherent stability, used in hydraulics and abrasive pressure fluid applications.
AF-8172: PUR - very high abrasion resistance and inherent stability, used primarily in intermediate stress hydraulics applications.
7710: PEHD 1000 - very high abrasion resistance and inherent stability, has a strong lip, with very good scraper effect. Has a limit in temperature maximum 80°C

The wiper/scraper series AF-487 has been used for many years in hydraulic cylinders. On the basis of its double function as a seal on the inside and wiper/scraper on the outside (atmosphere side), it is generally used together with a piston rod seal AF-441.

The sealing and wiper function allows a nearly leakage free rod sealing, even in the case of highly loaded hydraulic cylinders and rough environments.

The wiper/scraper can be used in closed and split (rod diameter approx. 30 mm onwards) grooves. For use in closed grooves, the profile ring must be carefully bent to a kidney shape.

Materials Overview: O-Ring

N: Acrylonitrile butadiene rubber - Used in general machine construction, hydraulics, pneumatics. Resistant to mineral oil based pressure fluids, HFA, HFB and HFC fluids and water.

F: Fluorine containing rubbers - Used at high temperatures and aggressive surrounding media, resistant to mineral based and synthetic pressure fluids, aliphatic, aromatic and chlorated hydrocarbons, phosphate-ester based poorly inflammable fluids.

E: Ethylene propylene diene rubbers - Used in armature and pump industry. Resistant to hot water, steam, phosphate-ester based poorly inflammable fluids but is not resistant to mineral oils!

S: Silicone rubbers.

C: Chloroprene rubbers

Double Acting Wiper
AF-487

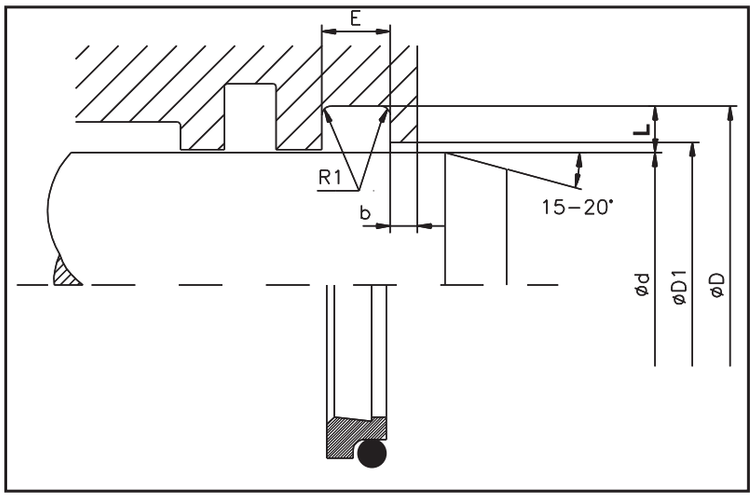

Limitations on Use

Velocity : reciprocating to 15 m/s
Temperature : -40 to +200 °C
(depending on O-ring material)

Media for Use

Mineral oil based pressure fluids, flame resistant fluids (HFA, HFB, HFC), non-polluting pressure fluids (Bio Oils), water, air and other media (depending O-ring material).

Surface Finish

Surfaces	Rmax	Rz	Ra
Rod diameter d	2,5 µm	1,6 µm	0,4 µm
Groove diameter D	10,0 µm	6,3 µm	1,6 µm
Groove flanks	16,0 µm	10,0 µm	3,2 µm

Recommended Sizes for Installation

Section	O-Ring cross-section ø mm	Recommended Diameter Standard D mm	Groove Width E mm	Groove Depth L mm	Radius R1 max. mm	Bar Width b mm
A	2,62	19 - 39,9	4,2	3,8	0,8	3,0
B	2,62	40 - 69,9	6,3	4,4	0,8	3,0
C	3,53	70 - 139,9	8,1	6,1	1,5	4,0
D	5,33	140 - 399,9	9,5	8,0	1,5	5,0
E	7,00	400 - 649,9	14,0	12,0	1,5	8,0
F	8,40	650 -	16,0	13,6	2,0	10,0

d f8/h9	D H9	E +0,2	D1 H11	O-Ring	Part N°.
20,00	**27,60**	**4,20**	**21,50**	**118**	**AF-487-0200-A-5640N**
22,00	**29,60**	**4,20**	**23,50**	**120**	**AF-487-0220-A-5640N**
25,00	**32,60**	**4,20**	**26,50**	**122**	**AF-487-0250-A-5640N**
26,00	33,60	4,20	27,50	122	AF-487-0260-A-5640N
28,00	**35,60**	**4,20**	**29,50**	**123**	**AF-487-0280-A-5640N**
30,00	37,60	4,20	31,50	125	AF-487-0300-A-5640N
32,00	**39,60**	**4,20**	**33,50**	**126**	**AF-487-0320-A-5640N**
35,00	42,60	4,20	36,50	128	AF-487-0350-A-5640N
36,00	**43,60**	**4,20**	**37,50**	**129**	**AF-487-0360-A-5640N**
37,00	44,60	4,20	38,50	129	AF-487-0370-A-5640N
38,00	45,60	4,20	39,50	130	AF-487-0380-A-5640N
40,00	**48,80**	**6,30**	**41,50**	**132**	**AF-487-0400-B-5640N**
42,00	50,80	6,30	43,50	133	AF-487-0420-B-5640N
45,00	**53,80**	**6,30**	**46,50**	**135**	**AF-487-0450-B-5640N**
48,00	56,80	6,30	49,50	137	AF-487-0480-B-5640N
50,00	**58,80**	**6,30**	**51,50**	**138**	**AF-487-0500-B-5640N**
52,00	60,80	6,30	53,50	139	AF-487-0520-B-5640N
55,00	63,80	6,30	56,50	141	AF-487-0550-B-5640N
56,00	**64,80**	**6,30**	**57,50**	**142**	**AF-487-0560-B-5640N**
58,00	66,80	6,30	59,50	143	AF-487-0580-B-5640N
60,00	68,80	6,30	61,50	144	AF-487-0600-B-5640N
63,00	**71,80**	**6,30**	**64,50**	**146**	**AF-487-0630-B-5640N**
65,00	73,80	6,30	66,50	147	AF-487-0650-B-5640N
70,00	**82,20**	**8,10**	**72,00**	**234**	**AF-487-0700-C-5640N**
75,00	87,20	8,10	77,00	235	AF-487-0750-C-5640N
80,00	**92,20**	**8,10**	**82,00**	**237**	**AF-487-0800-C-5640N**
85,00	97,20	8,10	87,00	239	AF-487-0850-C-5640N

Double Acting Wiper
AF-487

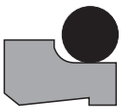

d f8/h9	D H9	E +0,2	D1 H11	O-Ring	Part N°.
90,00	**102,20**	**8,10**	**92,00**	**240**	**AF-487-0900-C-5640N**
95,00	107,20	8,10	67,00	242	AF-487-0950-C-5640N
100,00	**112,20**	**8,10**	**102,00**	**243**	**AF-487-1000-C-5640N**
105,00	117,20	8,10	107,00	245	AF-487-1050-C-5640N
110,00	**122,20**	**8,10**	**112,00**	**246**	**AF-487-1100-C-5640N**
115,00	127,20	8,10	117,00	248	AF-487-1150-C-5640N
120,00	132,20	8,10	122,00	249	AF-487-1200-C-5640N
125,00	**137,20**	**8,10**	**127,00**	**251**	**AF-487-1250-C-5640N**
130,00	142,20	8,10	132,00	253	AF-487-1300-C-5640N
135,00	147,20	8,10	137,00	254	AF-487-1350-C-5640N
140,00	**156,00**	**9,50**	**142,50**	**359**	**AF-487-1400-D-5640N**
150,00	166,00	9,50	152,50	361	AF-487-1500-D-5640N
155,00	171,00	9,50	157,50	362	AF-487-1550-D-5640N
160,00	**176,00**	**9,50**	**162,50**	**363**	**AF-487-1600-D-5640N**
170,00	186,00	9,50	172,50	365	AF-487-1700-D-5640N
175,00	191,00	9,50	177,50	365	AF-487-1750-D-5640N
180,00	**196,00**	**9,50**	**182,50**	**366**	**AF-487-1800-D-5640N**
185,00	201,00	9,50	187,50	366	AF-487-1850-D-5640N
190,00	206,00	9,50	192,50	368	AF-487-1900-D-5640N
195,00	211,00	9,50	197,50	368	AF-487-1950-D-5640N
200,00	**216,00**	**9,50**	**202,50**	**369**	**AF-487-2000-D-5640N**
210,00	226,00	9,50	212,50	371	AF-487-2100-D-5640N
220,00	**236,00**	**9,50**	**222,50**	**373**	**AF-487-2200-D-5640N**
225,00	241,00	9,50	227,50	374	AF-487-2250-D-5640N
230,00	246,00	9,50	232,50	374	AF-487-2300-D-5640N
240,00	256,00	9,50	242,50	376	AF-487-2400-D-5640N
250,00	**266,00**	**9,50**	**252,50**	**377**	**AF-487-2500-D-5640N**
260,00	276,00	9,50	262,50	378	AF-487-2600-D-5640N
270,00	286,00	9,50	272,50	379	AF-487-2700-D-5640N
280,00	**296,00**	**9,50**	**282,50**	**379**	**AF-487-2800-D-5640N**
290,00	306,00	9,50	292,50	380	AF-487-2900-D-5640N
300,00	316,00	9,50	302,50	381	AF-487-3000-D-5640N
310,00	326,00	9,50	312,50	381	AF-487-3100-D-5640N
320,00	**336,00**	**9,50**	**322,50**	**382**	**AF-487-3200-D-5640N**
330,00	346,00	9,50	332,50	382	AF-487-3300-D-5640N
340,00	356,00	9,50	342,50	383	AF-487-3400-D-5640N
350,00	366,00	9,50	352,50	383	AF-487-3500-D-5640N
360,00	**376,00**	**9,50**	**362,50**	**383**	**AF-487-3600-D-5640N**
370,00	386,00	9,50	372,50	384	AF-487-3700-D-5640N
380,00	396,00	9,50	382,50	384	AF-487-3800-D-5640N
390,00	406,00	9,50	392,50	385	AF-487-3900-D-5640N
400,00	424,00	14,00	402,50	461	AF-487-4000-E-5640N
410,00	434,00	14,00	412,50	462	AF-487-4100-E-5640N
420,00	444,00	14,00	422,50	463	AF-487-4200-E-5640N
430,00	454,00	14,00	432,50	463	AF-487-4300-E-5640N
440,00	464,00	14,00	442,50	464	AF-487-4400-E-5640N
450,00	474,00	14,00	452,50	465	AF-487-4500-E-5640N
460,00	484,00	14,00	462,50	466	AF-487-4600-E-5640N
470,00	494,00	14,00	472,50	467	AF-487-4700-E-5640N
480,00	504,00	14,00	482,50	468	AF-487-4800-E-5640N
490,00	514,00	14,00	492,50	469	AF-487-4900-E-5640N
500,00	524,00	14,00	502,50	469	AF-487-5000-E-5640N

Further sizes up to Ø 2500 mm available on request.
Sizes in bold correspond to rod diameter as per DIN ISO 3320.

Double Acting Wiper
AF-487

Example for ordering Wipers:

AF-487-0360-A-5640N

- Type
- Nominal diameter x 10
- Cross-section
- Standard material wiper
- Standard material O-Ring

Material Key:

Dynamic slide ring
AF-1012 - Virgin PTFE
AF-1022 - PTFE with additive
AF-1024 - PTFE with additive (FDA)
AF-4115 - PTFE with glass fibre
AF-2426 - PFTE with carbon
AF-5640 - PTFE with bronze/additive
AF-1111 - PTFE with Econol
AF-8172 - PUR
AF-7710 - UHMW-PE (PEHD) (FDA)

O-Ring
N -NBR
F - FPM
E - EPDM
S - Silicone
C - Chloropren

WARNING: Limits of application stated herein are standard values. They could be individually transgressed with due consideration to respective service conditions. In the event of a large duty cycle, pulsating operation and other complex operational conditions, simultaneous transgression of these values is not recommended. Due to a large variety of service conditions that may arise in course of actual use, the company does not take responsibility of or guarantee the functional accuracy of the individual components. Rights for changes are reserved.

product index

Profile	Type	Specification	Limitations of Use			Material	
			Temperature	Pressure	Velocity	Guide ring	Page
	FB	Endless or cut bearing elements	-60 up to +200° C	a) up to 25 N/mm² b) up to 15 N/mm²	up to 15 m/s	PTFE Compound	191
	RWR PWR	Split rings	-40 up to +110° C	a) up to 80 N/mm² b) up to 30 N/mm²	up to 0,8 m/s	Polyacetal glass filled	195
	RWR PWR	Split rings	-50 up to +145° C -50 up to +130° C	a) up to 250 N/mm² b) up to 55 N/mm² a) up to 345 N/mm² b) up to 70 N/mm²	up to 1 m/s up to 1,5 m/s	Phenolic resin impregnated cotton Polyester + PTFE or Graphite	200

Note: a) static
b) dynamic

Regarding the great variety of practice applications please ask our customer service department personally for missing types or dimensions

Guide Strip
FB

Guide strips are preferentially used in hydraulic and pneumatic cylinders. They assist the moving of pistons and piston rod, avoid metallic contact between sliding parts, and absorb transverse forces. Guide strip from PTFE materials excellent with their outstanding glide characteristics and high thermal and chemical resistance. Their use enhances service life and functional reliability of seals and cylinders.

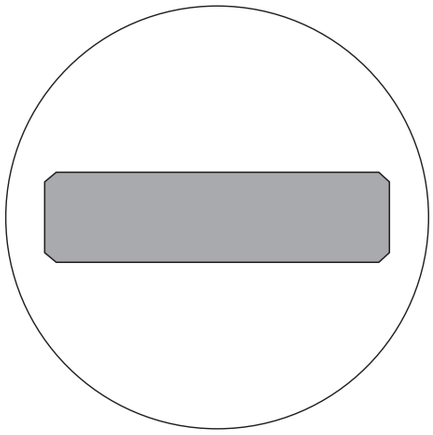

Material : PTFE compound
Velocity : reciprocating to 15 m/s
Temperature : -60 up to +200 °C

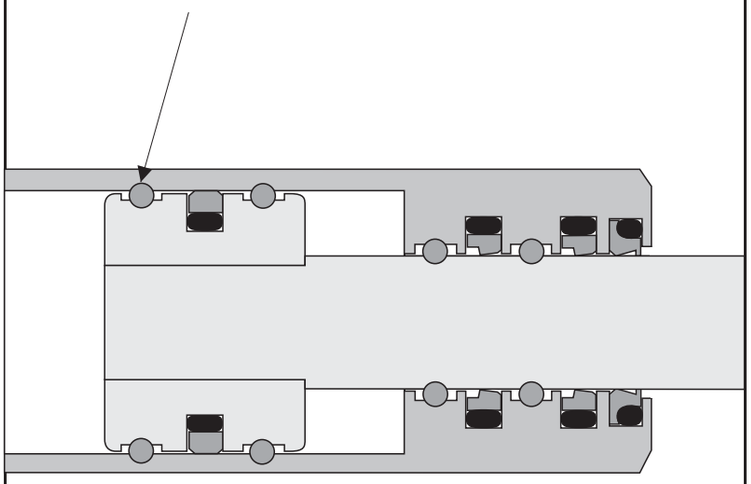

Special Features:

- Very good where low friction is a demand
- No stick slip effect even at low velocities
- Absorb dirt and particles
- Good damping of mechanical vibrations
- Good wiper effect
- No metallic contact due to plastic/metal material combination
- Can be pre-cut to most combinations of width + length, ready for assembly of any sizes
- Any size possible re diameter

Guide Strip
FB

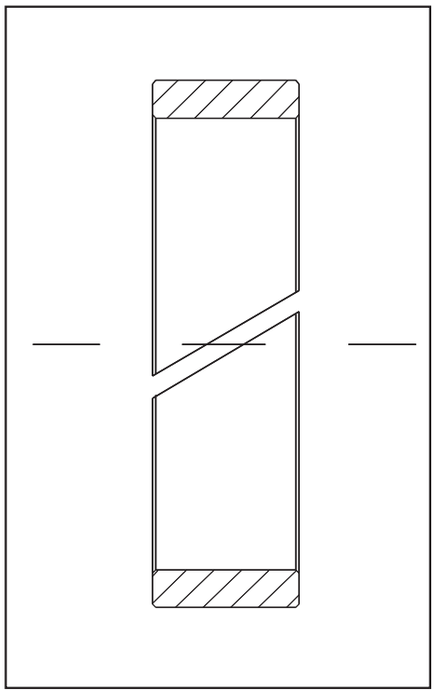

Guide strip

The guide strip has a rectangular cross section and is provided with a chamfer on all edges. Thus, non-permissible edge pressures in the groove corners are avoided. The chamfer also serves to simplify assembly.Guide strips are produced in various cross-sections as cut-out pieces. They are also available as cuttings (elongated lengths), suitable to every piston and rod diameter. The gap (m) is to be specially taken into account to ensure safe function and undisturbed operation of the seal. As a rule, the ends are provided with bevel cut. A straight cut or Z- cut are also possible.

Materials Overview:

AF-5640: PTFE with Bronze/additive: high abrasion resistance and inherent stability,
very good shear characteristics, good chemical resistance, used in intermediate to high stress hydraulics application.

AF-2426: PTFE with Carbon: good abrasion resistance and inherent stability, good chemical resistance, used in water and water-oil emulsions with intermediate stress. Also designed for dry runs.

Material Data

Compound	AF-5640			AF-2426		
Temperature [°C]	30	90	150	30	90	150
Max. compress. resist. dynamic	15	10	7	8	6	4

Calculations

Designing and sizing of guide ring for dynamic applications is dependent to a large extent on the radial force and the associated deformation of the slide material, guide ring cut part and the service temperature. The value of dynamic compressive strength is to be considered taking the above factors into account. In practice, it is advantageous to include a factor of safety.

$$B_{min} \geq \frac{F_R \cdot S}{\sigma_{zul.\,dyn.} \cdot D_n} \quad [mm]$$

Where:

B_{min} = min. width of slide ring [mm]
F_R = max. radial load [N]
$\sigma_{zul.\,dyn}$ = permissible dynamic compression strength [N/mm²]
S = safety factor
D_n = nominal diameter [mm]

Example:

$$B_{min} \geq \frac{4000 \cdot 2}{15 \cdot 63} \approx 8{,}5$$

Rod diameter	D_n	= 63 mm
Max. radial load	F_R	= 4 kN
dyn. compress. strength	$\sigma_{zul.\,dyn}$	= 15N/mm²
Safety factor	S	= 2

In accordance with above calculations, a choice can be made as
1 Guide strip for groove width of 9.7 mm (part N°. FB 63/68x9,7/X-5640)
2 Guide strip for groove width of 5.6 mm (part N°. FB 63/68x5,6/X5640)
To achieve as much of a guide surface in length as possible, incorporation of two guide ring is to recommended.

PTFE Guide strips have proven their superiority for use on pistons and piston rods for hydraulic and pneumatic cylinders. Particularly in the case of hydraulic cylinders under variable loads, very small or large stroke speeds and fluctuating temperatures, these guide strips are preferentially used (e.g. mobile hydraulics,machine tool and presses manufacturing, agricultural machinery, vehicle and trucks industry etc.).

Good mechanical characteristics of the guide ring and the materials coupled with their ability to absorb dirt particles present in the pressure medium and good frictional behaviour guarantee long service life even in tough and demanding service conditons.

Guide Strip
FB

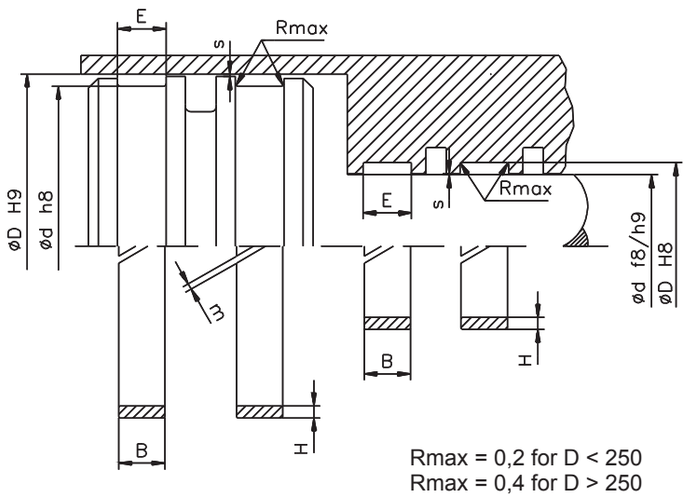

Rmax = 0,2 for D < 250
Rmax = 0,4 for D > 250

Limitations on Use

Velocity	: reciprocating to 15 m/s
Temperature	: -60 to +200 °C
Compr. strength, dyn.	: comp. 55 max. 15 N/mm²
	comp. 30 max. 8 N/mm²

Media for Use

Mineral oil based pressure fluids, flame resistant fluids (HFA, HFB, HFC), non-polluting pressure fluids (Bio Oils), water, air, etc.

Split Sizes

Radial clearance "s" depends on the included seal type.
Recommended ring split "m" as per the following Table:

Bore diameter mm	Rod diameter mm	Ring split m mm
≤ - 24,9	≤ - 19,9	1,0 - 1,5
25 - 44,9	20 - 39,9	1,5 - 2,0
45 - 79,9	40 - 74,9	2,0 - 4,0
80 - 129,9	75 - 124,9	3,0 - 5,0
130 - 349,9	125 - 299,9	4,0 - 6,0
350 - 1000,0	300 - 1000,0	5,0 - 8,0

H -0,05	B -0,2	E +0,2	Length per roll/approx. metres	Part N°.
1,00	10,00	10,20	30	FB 10,2x1-5640
1,50	2,40	2,50	20	FB 1,5x2,5-5640
1,50	3,90	4,00	20	FB 4x1,5-5640
1,50	5,50	5,60	20	FB 5,6x1,5-5640
1,50	5,80	6,00	20	FB 6x1,5-5640
1,50	6,00	6,30	20	FB 6,3x1,5-5640
1,50	9,50	9,70	20	FB 9,7x1,5-5640
1,50	10,00	10,20	20	FB 10,2x1,5-5640
1,50	12,70	13,00	20	FB 13x1,5-5640
1,50	14,80	15,00	20	FB 15x1,5-5640
1,50	15,00	15,20	20	FB 15,2x1,5-5640
1,55	2,40	2,50	19	FB 1,55x2,5-5640
1,55	3,90	4,00	19	FB 4x1,55-5640
1,55	4,90	5,00	19	FB 5x1,55-5640
2,00	4,90	5,00	15	FB 5x2-5640
2,00	5,00	5,20	15	FB 5,2x2-5640
2,00	5,40	5,50	15	FB 5,5x2-5640
2,00	8,00	8,20	15	FB 8,2x2-5640
2,00	10,00	10,20	15	FB 10,2x2-5640
2,00	12,00	12,20	15	FB 12,2x2-5640
2,00	15,00	15,20	15	FB 15,2x2-5640
2,00	20,00	20,30	15	FB 20,3x2-5640
2,00	25,00	25,40	15	FB 25,4x2-5640
2,00	30,00	30,30	15	FB 30,3x2-5640
2,00	40,00	40,50	15	FB 40,5x2-5640
2,00	45,00	45,60	15	FB 45,6x2-5640
2,00	50,00	50,60	15	FB 50,6x2-5640
2,00	60,00	60,60	15	FB 60,6x2-5640
2,50	4,00	4,20	12	FB 4,2x2,5-5640
2,50	4,90	5,00	12	FB 5x2,5-5640

H -0,05	B -0,2	E +0,2	Length per roll/approx. metres	Part N°.
2,50	5,50	5,60	12	FB 5,6x2,5-5640
2,50	6,10	6,30	12	FB 6,3x2,5-5640
2,50	7,90	8,10	12	FB 8,1x2,5-5640
2,50	9,50	9,70	12	FB 9,7x2,5-5640
2,50	12,00	12,10	12	FB 12,1x2,5-5640
2,50	12,50	12,70	12	FB 12,7x2,5-5640
2,50	14,80	15,00	12	FB 15x2,5-5640
2,50	19,50	20,00	12	FB 20x2,5-5640
2,50	24,50	25,00	12	FB 25x2,5-5640
2,50	29,50	30,00	12	FB 30x2,5-5640
2,50	34,50	35,00	12	FB 35x2,5-5640
2,50	39,50	40,00	12	FB 40x2,5-5640
2,50	40,00	40,20	12	FB 40,2x2,5-5640
2,50	59,50	60,00	12	FB 60x2,5-5640
3,00	4,60	4,80	9	FB 4,8x3-5640
3,00	9,50	9,70	9	FB 9,7x3-5640
3,00	11,80	12,00	9	FB 12x3-5640
3,00	12,60	12,80	9	FB 12,8x3-5640
3,00	14,80	15,00	9	FB 15x3-5640
3,00	20,00	20,30	9	FB 20,3x3-5640
3,00	24,50	25,00	9	FB 25x3-5640
3,00	25,00	25,30	9	FB 25,3x3-5640
3,00	30,00	30,20	9	FB 30,2x3-5640
3,00	39,50	40,00	9	FB 40x3-5640
3,50	15,00	15,20	8	FB 15,2x3,5-5640
3,50	30,00	30,20	8	FB 30,2x3,5-5640
4,00	7,80	8,00	8	FB 8x4-5640
4,00	9,50	9,70	8	FB 9,7x4-5640
4,00	20,00	20,30	8	FB 20,3x4-5640

Further sizes and an extensive range of inch measurement diagrams available on request.

Guide Strip
FB

Example for ordering rolls or / meter:

PTFE/bronze 2.5 x 9.7 mm

FB 9,7 x 2,5 - 5640 - Y

Type
Groove width
Radial depth
Standard material
Metres

Material Key:

Guide strip
AF-2426-PTFE carbon
AF-5640-PTFE bronze

Example for ordering Ready to use cut outs:

e.g.: piston Guide strip 2.5 mm for cylinder Ø 63 mm; groove width 9.7 mm

FB 63 / 58 x 9,7/X - 5640

Type
Bore diameter D
Groove diameter d
groove width/cut
Standard material

Material Key:

Guide strip
AF-2426-PTFE carbon
AF-5640-PTFE bronze

e.g..: Rod Guide strip 2.5 mm for rod Ø 50 mm; groove width 9.7 mm

FB 50 / 55 x 9,7/X - 5640

Type
Rod diameter d
Groove diameter D
Groove width/cut
Standsrd material

Note: Standard ready to use cut outs are delivered by factory with bevel cut (standard) with due consideration to split "m".

Stright cut 90 degree is	**Y**
Z-cut is	**Z**
Standard cut is	**X**

WARNING: Limits of application stated herein are standard values. They could be individually transgressed with due consideration to respective service conditions. In the event of a large duty cycle, pulsating operation and other complex operational conditions, simultaneous transgression of these values is not recommended. Due to a large variety of service conditions that may arise in course of actual use, the company does not take responsibility of or guarantee the functional accuracy of the individual components. Rights for changes are reserved.

Guide Rings
PWR, RWR

Guide rings PWR and RWR filled polyacetal successfully reduce metallic contact between sliding parts, i.e. piston rod and piston in cylinder bore. In the case of intermediate duty applications, they represent an alternative of phenolic fabric or polyester fibre wear rings.
They are supplied in slotted design with a cut at an angle or straight splitting.

Special Features:

- Very good shear characteristics, no stick slip effect
- Exact tolerances through injection process
- No swelling
- Avoids metallic contact of sliding parts
- Easy to manufacture the groove geometry
- Easy snap-in assembly into the groove
- Alternative to PTFE, Phenolic fabric or Polyester polyester fiber, wear and guide rings on a different price basis

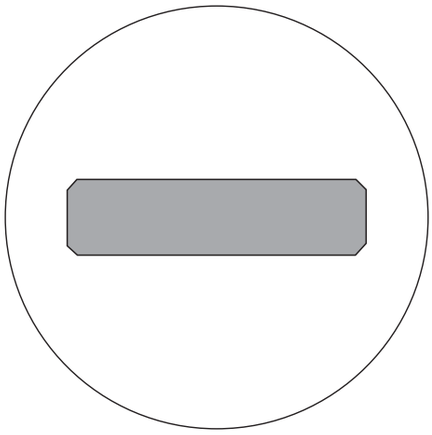

Material : polyacetal glass fibre einforced
Velocity : reciprocating to 0.8 m/s
Temperature : -40 to +110 °C

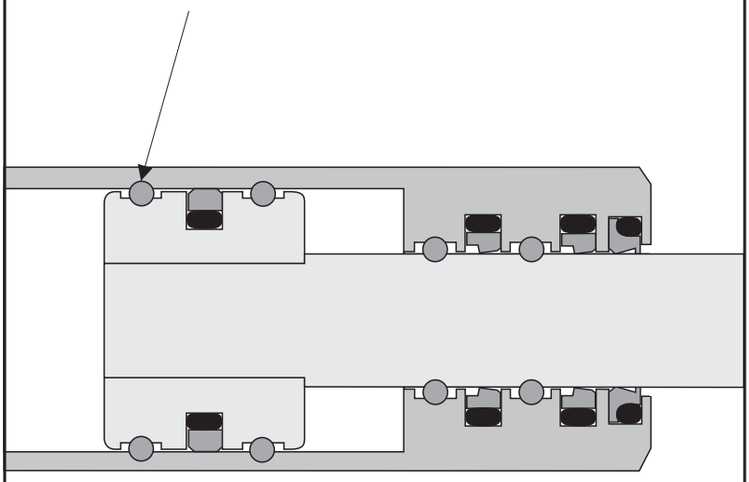

Guide Rings
PWR, RWR

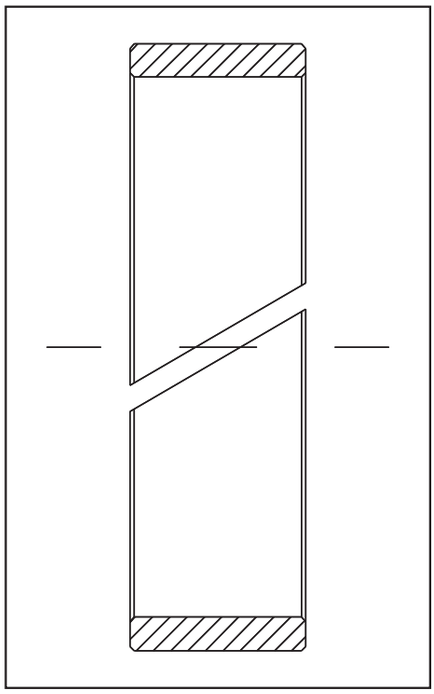

Guide Ring

The guide ring has a rectangular cross-section and is provided with a chamfer on all edges. Thus non-permissible edge pressures in the groove corners are avoided. The chamfer also serves to simplify assembly.

Guide rings are basically preformed with a chamfered cut. The split m is specially taken into account to ensure safe function and undisturbed operation of the seal.

Materials Overview

The material Wearite (glass fibre reinforced polyacetal) excels in wear resistance and high load bearing capacity over the entire temperature range of application. Good media compatibility and low frictional coefficient of the material make it suitable for both hydraulics and pneumatics.

Material Data

Max. compressive strength static	[N/mm²]	80
Max. compressive strength dynamic	[N/mm²]	30

Calculation

Designing and sizing of wear ring for dynamic applications is dependent to a large extent on the radial force and the associated deformation and strength of the material, wear rings cut length and service temperature. The value of the dynamic compressive strength is to be considered, taking the above factors into account. It is advantageous to include a factor of safety

$$B_{min} \geq \frac{F_R \cdot S}{\sigma_{zul.\,dyn.} \cdot D_n} \quad [mm]$$

Where:

B_{min} = min. width of slide ring [mm]
F_R = max. radial load [N]
$\sigma_{zul.dyn}$ = permissible dynamic compression strength [N/mm²]
S = safety factor
D_n = nominal diameter [mm]

Example:

$$B_{min} \geq \frac{5000 \cdot 2}{30 \,.\, 63} \approx 5{,}5$$

Rod diameter	D_n	=	63 mm
Max. radial load	F_R	=	4 kN
dyn. compress. streng	$\sigma_{zul.dyn}$	=	30 N/mm²
Safety factor	S	=	2

In accordance with above calculations, a choice can be made as
1 Guide rings for groove width of 9.7 mm (part N°. PWR 63/58x9,7-A
2 Guide rings for groove width of 5.6 mm (part N°. PWR 63/58x5,6-A
To achieve as much of a sliding surface as possible, the use of two wear rings is to be recommended.

Guide Rings
PWR, RWR

Piston Guide

D H9	d h8	E +0,2	Part N°.
50,0	45,0	5,6	PWR 50/45x5,6-A
50,0	45,0	9,7	PWR 50/45x9,7-A
52,0	46,0	12,8	PWR 52/46x12,8-A
55,0	49,0	12,8	PWR 55/49x12,8-A
55,0	50,0	5,6	PWR 55/50x5,6-A
55,0	50,0	9,7	PWR 55/50x9,7-A
60,0	54,0	12,8	PWR 60/54x12,8-A
60,0	55,0	5,6	PWR 60/55x5,6-A
60,0	55,0	9,7	PWR 60/55x9,7-A
62,0	56,0	12,8	PWR 62/56x12,8-A
63,0	57,0	12,8	PWR 63/57x12,8-A
63,0	58,0	5,6	PWR 63/58x5,6-A
63,0	58,0	9,7	PWR 63/58x9,7-A
65,0	59,0	12,8	PWR 65/59x12,8-A
68,0	63,0	5,6	PWR 68/63x5,6-A
68,0	63,0	9,7	PWR 68/63x9,7-A
70,0	64,0	12,8	PWR 70/64x12,8-A
70,0	65,0	9,7	PWR 70/65x9,7-A
75,0	69,0	12,8	PWR 75/69x12,8-A
75,0	70,0	5,6	PWR 75/70x5,6-A
75,0	70,0	9,7	PWR 75/70x9,7-A
80,0	74,0	12,8	PWR 80/74x12,8-A
80,0	75,0	5,6	PWR 80/75x5,6-A
80,0	75,0	9,7	PWR 80/75x9,7-A
85,0	79,0	12,8	PWR 85/79x12,8-A
85,0	80,0	5,6	PWR 85/80x5,6-A
85,0	80,0	9,7	PWR 85/80x9,7-A
90,0	84,0	12,8	PWR 90/84x12,8-A
90,0	85,0	5,6	PWR 90/85x5,6-A
90,0	85,0	9,7	PWR 90/85x9,7-A
93,0	87,0	12,8	PWR 93/87x12,8-A
95,0	89,0	12,8	PWR 95/89x12,8-A
95,0	90,0	5,6	PWR 95/90x5,6-A
95,0	90,0	9,7	PWR 95/90x9,7-A
100,0	95,0	5,6	PWR 100/95x5,6-A
100,0	95,0	9,7	PWR 100/95x9,7-A
105,0	99,0	12,8	PWR 105/99x12,8-A
105,0	100,0	5,6	PWR 105/100x5,6-A
105,0	100,0	9,7	PWR 105/100x9,7-A
110,0	104,0	12,8	PWR 110/104x12,8-A
110,0	105,6	5,6	PWR 110/105x5,6-A
110,0	105,0	9,7	PWR 110/105x9,7-A
115,0	109,0	12,8	PWR 115/109x12,8-A
115,0	110,0	5,6	PWR 115/110x5,6-A
115,0	110,0	9,7	PWR 115/110x9,7-A
120,0	114,0	12,8	PWR 120/114x12,8-A
125,0	119,0	12,8	PWR 125/119x12,8-A
125,0	120,0	5,6	PWR 125/120x5,6-A
125,0	120,0	9,7	PWR 125/120x9,7-A
130,0	124,0	12,8	PWR 130/124x12,8-A
135,0	129,0	12,8	PWR 135/129x12,8-A
140,0	134,0	12,8	PWR 140/134x12,8-A
140,0	135,0	5,6	PWR 140/135x5,6-A
140,0	135,0	9,7	PWR 140/135x9,7-A
145,0	139,0	12,8	PWR 145/139x12,8-A
150,0	144,0	12,8	PWR 150/144x12,8-A
155,0	149,0	19,2	PWR 155/149x19,2-A
160,0	154,0	19,2	PWR 160/154x19,2-A

Rod Guide

d f8/h9	D H8	E +0,2	Part N°.
45,0	50,0	5,6	RWR 45/50x5,6-A
45,0	50,0	9,7	RWR 45/50x9,7-A
45,0	51,0	9,6	RWR 45/51x9,6-A
46,0	52,0	9,6	RWR 46/52x9,6-A
50,0	55,0	5,6	RWR 50/55x5,6-A
50,0	55,0	9,7	RWR 50/55x9,7-A
50,0	56,0	9,6	RWR 50/56x9,6-A
52,0	58,0	9,6	RWR 52/58x9,6-A
55,0	60,0	5,6	RWR 55/60x5,6-A
55,0	60,0	9,7	RWR 55/60a9,7-A
55,0	61,0	9,6	RWR 55/61x9,6-A
56,0	61,0	5,6	RWR 56/61x5,6-A
56,0	61,0	9,7	RWR 56/61x9,7-A
56,0	62,0	12,8	RWR 56/62x12,8-A
60,0	66,0	12,8	RWR 60/66x12,8-A
61,0	67,0	12,8	RWR 61/67x12,8-A
62,0	68,0	12,8	RWR 62/68x12,8-A
63,0	68,0	5,6	RWR 63/68x5,6-A
63,0	68,0	9,7	RWR 63/68x9,7-A
63,0	69,0	12,8	RWR 63/69x12,8-A
65,0	70,0	5,6	RWR 65/70x5,6-A
65,0	70,0	9,7	RWR 65/70X9,7-A
65,0	71,0	12,8	RWR 65/71x12,8-A
70,0	75,0	5,6	RWR 70/75x5,6-A
70,0	75,0	9,7	RWR 70/75x9,7-A
70,0	76,0	12,8	RWR 70/76x12,8-A
72,0	78,0	12,8	RWR 72/78x12,8-A
73,0	79,0	12,8	RWR 73/79X12,8-A
75,0	80,0	5,6	RWR 75/80x5,6-A
75,0	80,0	9,7	RWR 75/80x9,7-A
75,0	81,0	12,8	RWR 75/81x12,8-A
76,0	82,0	12,8	RWR 76/82x12,8-A
78,0	84,0	12,8	RWR 78/84x12,8-A
80,0	85,0	5,6	RWR 80/85x5,6-A
80,0	86,0	12,8	RWR 80/86x12,8-A
85,0	91,0	12,8	RWR 85/91x12,8-A
86,0	92,0	12,8	RWR 86/92x12,8-A
90,0	95,0	5,6	RWR 90/95x5,6-A
90,0	95,0	9,7	RWR 90/95x9,7-A
90,0	96,0	12,8	RWR 90/96X12,8-A
91,0	97,0	12,8	RWR 91/97x12,8-A
95,0	100,0	5,6	RWR 95/100x5,6-A
95,0	100,0	9,7	RWR 95/100x9,7-A
95,0	101,0	12,8	RWR 95/101x12,8-A
100,0	105,0	5,6	RWR 100/105x5,6-A
100,0	105,0	9,7	RWR 100/105x9,7-A
100,0	106,0	12,8	RWR 100/106x12,8-A
105,0	111,0	12,8	RWR 105/111x12,8-A
110,0	116,0	12,8	RWR 110/116x12,8-A
115,0	121,0	12,8	RWR 115/121x12,8-A
120,0	125,0	5,6	RWR 120/125x5,6-A
120,0	125,0	9,7	RWR 120/125x9,7-A
120,0	126,0	12,8	RWR 120/126x12,8-A
125,0	131,0	12,8	RWR 125/131x12,8-A
130,0	136,0	12,8	RWR 130/136x12,8-A
135,0	140,0	5,6	RWR 135/140x5,6-A
135,0	140,0	9,7	RWR 135/140x9,7-A
135,0	141,0	12,8	RWR 135/141x12,8-A

Guide Rings
PWR, RWR

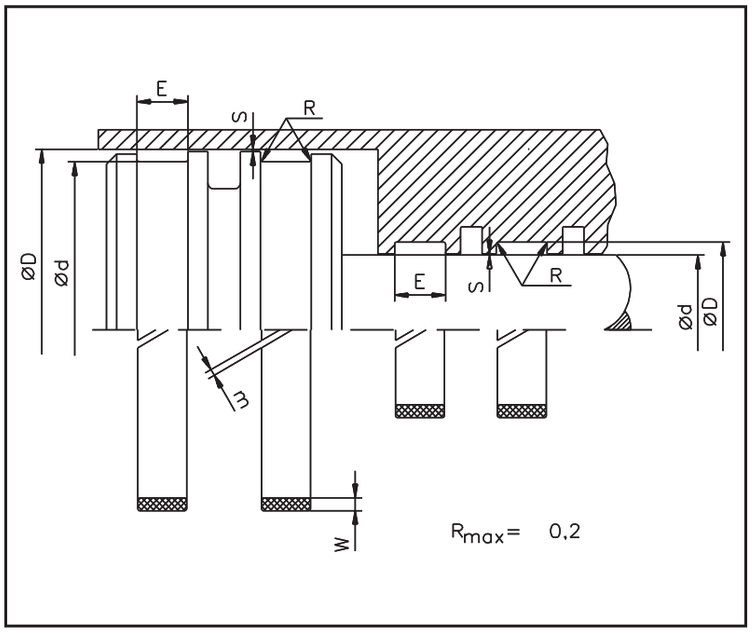

Limitations on Use

Velocity : reciprocating to 0.8 m/s
Temperature : -40 to +110 °C
Compress. strength, dyn. : up to 20 N/mm²

Media for Use

Mineral oil based pressure fluids, flame resistant fluids (HFA, HFB, HFC), non-polluting pressure fluids (Bio Oils), water, air, etc.

Split Sizes

Radial clearence "s" depends on the included seal type.

Recommended ring split "m" as per following table:

Bore diameter mm	Rod diameter mm	Ring split m mm
≤ 45	≤ 50	1,5
50 - 145	55 - 150	2,0
150 - 220	155 - 230	2,5
230 - 300	240 - 300	3,0

Piston Guide

D H9	d h8	E +0,2	Part N°.
16,0	12,0	9,6	PWR 16/12x9,6-A
18,0	14,0	9,6	PWR 18/14x9,6-A
20,0	16,0	9,6	PWR 20/16x9,6-A
22,0	18,0	9,6	PWR 22/18x9,6-A
24,0	20,0	9,6	PWR 24/20x9,6-A
25,0	21,0	9,6	PWR 25/21x9,6-A
25,0	20,0	5,6	PWR 25/20x5,6-A
25,0	20,0	9,7	PWR 25/20x9,7-A
27,0	22,0	5,6	PWR 27/22x5,6-A
27,0	22,0	9,7	PWR 27/22x9,7-A
27,0	23,0	9,6	PWR 27/23x9,6-A
28,0	24,0	9,6	PWR 28/24x9,6-A
30,0	25,0	5,6	PWR 30/25x5,6-A
30,0	25,0	9,7	PWR 30/25x9,7-A
30,0	26,0	9,6	PWR 30/26x9,6-A
32,0	27,0	5,6	PWR 32/27x5,6-A
32,0	27,0	9,7	PWR 32/27x9,7-A
32,0	28,0	9,6	PWR 32/28x9,6-A
35,0	30,0	5,6	PWR 35/30x5,6-A
35,0	30,0	9,7	PWR 35/30x9,7-A
35,0	31,0	9,6	PWR 35/31x9,6-A
36,0	32,0	9,6	PWR 36/32x9,6-A
37,0	32,0	5,6	PWR 37/32x5,6-A
37,0	32,0	9,7	PWR 37/32x9,7-A
38,0	34,0	9,6	PWR 38/34x9,6-A
40,0	35,0	5,6	PWR 40/35x5,6-A
40,0	35,0	9,7	PWR 40/35x9,7-A
40,0	36,0	9,6	PWR 40/36x9,6-A
42,0	38,0	9,6	PWR 42/38x9,6-A
45,0	40,0	5,6	PWR 45/40x5,6-A
45,0	40,0	9,7	PWR 45/40x9,7-A
45,0	41,0	9,6	PWR 45/41x9,6-A
50,0	44,0	9,6	PWR 50/44x9,6-A

Rod Guide

d f8/h9	D H8	E +0,2	Part N°.
12,0	16,0	9,6	RWR 12/16x9,6-A
14,0	18,0	9,6	RWR 14/18x9,6-A
15,0	19,0	9,6	RWR 15/19x9,6-A
16,0	20,0	9,6	RWR 16/20x9,6-A
18,0	22,0	9,6	RWR 18/22x9,6-A
20,0	24,0	9,6	RWR 20/24x9,6-A
20,0	25,0	5,6	RWR 20/25x5,6-A
20,0	25,0	9,7	RWR 20/25x9,7-A
22,0	26,0	9,6	RWR 22/26x9,6-A
24,0	28,0	9,6	RWR 24/28x9,6-A
25,0	29,0	9,6	RWR 25/29x9,6-A
25,0	30,0	5,6	RWR 25/30x5,6-A
25,0	30,0	9,7	RWR 25/30x9,7-A
28,0	32,0	9,6	RWR 28/32x9,6-A
30,0	34,0	9,6	RWR 30/34x9,6-A
30,0	35,0	5,6	RWR 30/35x5,6-A
30,0	35,0	9,7	RWR 30/35x9,7-A
32,0	36,0	9,6	RWR 32/36x9,6-A
32,0	37,0	5,6	RWR 32/37x5,6-A
32,0	37,0	9,7	RWR 32/37x9,7-A
34,0	38,0	9,6	RWR 34/38x9,6-A
35,0	39,0	9,6	RWR 35/39x9,6-A
35,0	40,0	5,6	RWR 35/40x5,6-A
35,0	40,0	9,7	RWR 35/40x9,6-A
36,0	40,0	9,6	RWR 36/40x9,6-A
36,0	41,0	5,6	RWR 36/41x5,6-A
36,0	41,0	9,7	RWR 36/41x9,7-A
37,0	41,0	9,6	RWR 37/41x9,6-A
38,0	42,0	9,6	RWR 38/42x9,6-A
40,0	44,0	9,6	RWR 40/44x9,6-A
40,0	45,0	5,6	RWR 40/45x5,6-A
40,0	45,0	9,7	RWR 40/45x9,7-A
42,0	46,0	9,6	RWR 42/46x9,6-A

Guide Rings
PWR, RWR

Piston Guide

D H9	d h8	E +0,2	Part N°.
170,0	164,0	19,2	PWR 170/164x19,2-A
175,0	169,0	19,2	PWR 175/169x19,2-A
180,0	174,0	19,2	PWR 180/174x19,2-A
185,0	179,0	19,2	PWR 185/179x19,2-A
190,0	184,0	19,2	PWR 190/184x19,2-A
195,0	189,0	19,2	PWR 195/189x19,2-A
200,0	194,0	19,2	PWR 200/194x19,2-A
205,0	199,0	19,2	PWR 205/199x19,2-A
210,0	204,0	19,2	PWR 210/204x19,2-A
220,0	214,0	19,2	PWR 220/214x19,2-A
230,0	224,0	19,2	PWR 230/224x19,2-A
240,0	234,0	19,2	PWR 240/234x19,2-A
250,0	244,0	19,2	PWR 250/244x19,2-A
260,0	254,0	19,2	PWR 260/254x19,2-A
270,0	264,0	19,2	PWR 270/264x19,2-A
280,0	274,0	19,2	PWR 280/274x19,2-A
290,0	284,0	19,2	PWR 290/284x19,2-A
300,0	294,0	19,2	PWR 300/294x19,2-A

Rod Guide

d f8/h9	D H8	E +0,2	Part N°.
141,0	147,0	12,8	RWR 141/147x12,8-A
143,0	149,0	12,8	RWR 143/149x12,8-A
145,0	151,0	12,8	RWR 145/151x12,8-A
150,0	156,0	12,8	RWR 150/156x12,8-A
154,0	160,0	19,2	RWR 154/160x19,2-A
160,0	166,0	19,2	RWR 160/166x19,2-A
162,0	168,0	19,2	RWR 162/168x19,2-A
170,0	176,0	19,2	RWR 170/176x19,2-A
180,0	186,0	19,2	RWR 180/186x19,2-A
190,0	196,0	19,2	RWR 190/196x19,2-A
200,0	206,0	19,2	RWR 200/206x19,2-A
210,0	216,0	19,2	RWR 210/216x19,2-A
220,0	226,0	19,2	RWR 220/226x19,2-A
230,0	236,0	19,2	RWR 230/236x19,2-A
240,0	246,0	19,2	RWR 240/246x19,2-A
250,0	256,0	19,2	RWR 250/256x19,2-A
260,0	266,0	19,2	RWR 260/266x19,2-A
270,0	276,0	19,2	RWR 270/276x19,2-A
280,0	286,0	19,2	RWR 280/286x19,2-A
290,0	296,0	19,2	RWR 290/296x19,2-A

Dimensions in bold correspond to mounting spaces as per ISO/DIN 10766.

Example for ordering :

PWR 63 / 58 x 9,7 - A

- Type
- Bore Diameter D
- Groove Diameter d
- Groove width
- Material

Type: PWR and RWR
2.5 mm radial section
2.0 mm radial section
3.0 mm radial section

Groove Width:
5.6 mm
9.7 mm
9.6 mm
12.8 mm
19.2 mm

WARNING: Limits of application stated herein are standard values. They could be individually transgressed with due consideration to respective service conditions. In the event of a large duty cycle, pulsating operation and other complex operational conditions, simultaneous transgression of these values is not recommended. Due to a large variety of service conditions that may arise in course of actual use, the company does not take responsibility of or guarantee the functional accuracy of the individual components. Rights for changes are reserved.

Guide Rings

PWR, RWR

Wear rings have been used in hydraulic and pneumatic cylinders for many years. They serves for sliding between the piston and rod, and it avoids the possibility of metallic contact between sliding parts and absorbs all transverse forces.. Metallic guide bushes are being replaced by nonmetallic wear rings (various plastics).
Non-metallic wear rings offer a series of advantages that contribute to enhance functional security and service life.

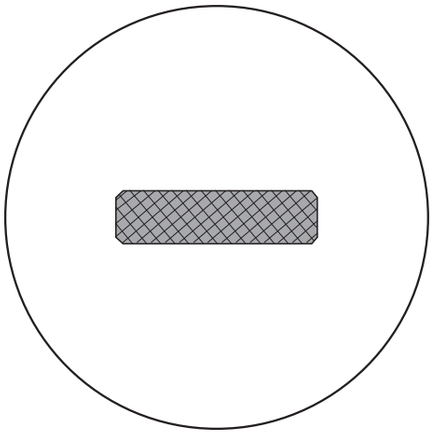

Material : fabric compound
Velocity : reciprocating to 1 m/s
Temperature : -50 to +145 °C

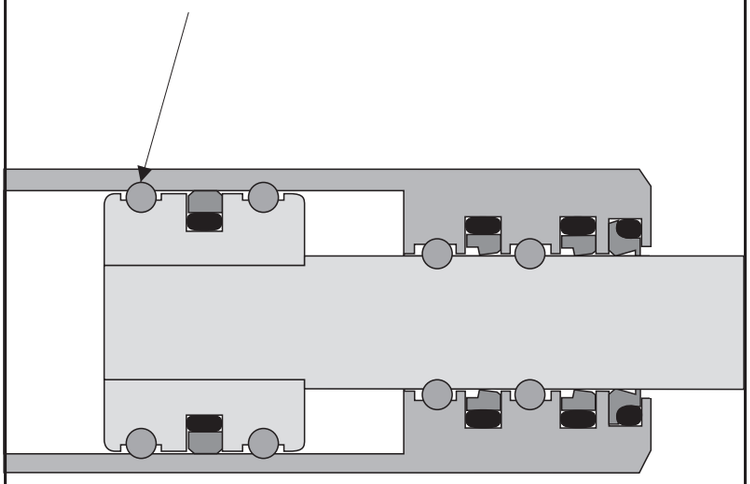

Special Features:

- High compression strength, absorption of higher transverse forces
- High anti wear properties, long life
- No corrosion, plastic/metal combination
- Low friction, good resistance to galling
- Damping of mechanical vibrations
- Easy to assemble
- Cost convenient and available for all diameters.

Guide Rings
PWR, RWR

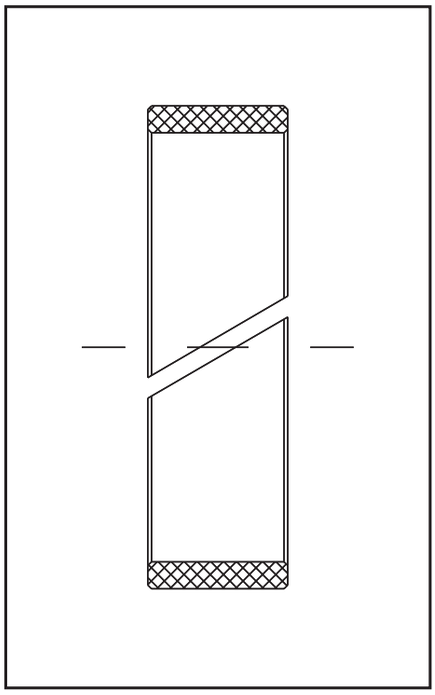

Guide Ring

Guide rings have a rectangular cross-section and are chamfered at the corners to avoid excess edge pressures at groove corners. The chamfers also serve to simplify assembly.

The standard design has a chamfered cut at the ring end. Guide rings can beused for every piston and rod diameter. The slit "m" is especially necessary for that function.

Materials Overview

AF-9600: Preformed slide ring from fabric cotton and phenolic resin reinforcement without auxilliary lubricant. Good shear characteristics, high compression and wear resistance. Meant for high loads in foodstuffs and pharmaceutical industry.

AF-9610: Preformed slide ring from fabric cotton and phenolic resin reinforcement with graphite as additional lubricant. Good shear characteristics and resistance to galling, high compression and wear resistance. Meant for heavy duty hydraulics and pneumatics.

AF-9200: Slide band from fine plastics fibre with PTFE lubricant. Very high compression resistance, high wear resistance and good shear characteristics. Meant for heavy duty hydraulics.

AF-9210: Slide band from fine plastics fibre with additional lubricant. Very high compression resistance, high wear resistance and good shear characteristics. Meant for heavy duty hydraulics.

Material Data

		Type AF-9200 and AF-9210	Type AF-9600 and AF- 9610
Compress. strength, stat. N/mm²		345	250
Compress. strength, dyn. N/mm²		70	55
Temperature range	°C	-40 to +130	-50 to +145
Water uptake	%	< 0,1	< 1,2

Calculations

Designing and sizing of wear ring for dynamic applications is dependent to a large extent on the radial force and the associated deformation strength of the material, wear rings cut splitting and service temperature. The value of the dynamic compressive strength is to be considered, taking the above factors into account. In practice is it important to include a factor of safety.

$$B_{min} \geq \frac{F_R \cdot S}{\sigma_{zul.\,dyn.} \cdot D_n} \quad [mm]$$

Where:

B_{min} = min. width of guide ring [mm]
F_R = max. radial load [N]
$\sigma_{zul.dyn}$ = permissible dynamic compression strength [N/mm²]
S = safety factor
D_n = nominal diameter (of rod/piston) [mm]

Example:

$$B_{min} \geq \frac{40000 \cdot 2}{70 \cdot 63} \approx 18{,}1$$

Rod diameter	D_n	=	63	mm
max. radial load	F_R	=	40000	N
dyn. compr. strength (material AF-9600)	$\sigma_{zul.dyn}$	=	70	N/mm²
Safety factor	S	=	2	

Non metallic materials are preferred instead of metal bushes for use in wear rings to pistons and piston rods of hydraulic and pneumatic cylinders. This is specially important for applications like mining, building and heavy machinery engineering where exceptionally high or inadequately defined radial forces come into play.

In accordance with the above calculations, a choice can be made as:
1 slide ring for groove width of 15.0 mm.
2 slide rings for groove width of 9.7 mm.
To cover as much of surface as possible, incorporation of two wear rings is to be recommended.

Guide Rings
PWR, RWR

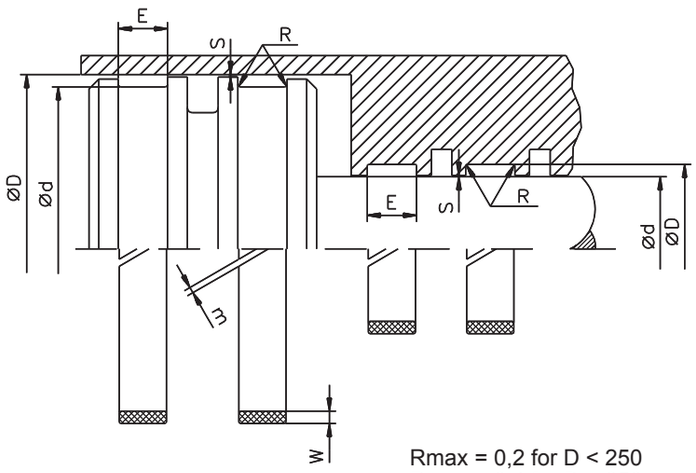

Rmax = 0,2 for D < 250
Rmax = 0,4 for D > 250

Limitations on Use

Velocity	reciprocating to 1m/s
Temperature	: -50 to +150 °C (440)
	-40 to +120 °C (400 and 420)
Compress. strength, dyn.:	110 N/mm² (440)
	90 N/mm² (400 and 420)

Media for Use

Mineral oil based pressure fluids, flame resistant fluids (HFA, HFB, HFC), non-polluting pressure fluids (Bio Oils), water, air etc.

Split Sizes

Radial clearence "s" depends on the included seal type.

Recommended ring split "m" as per following table:

diameter	m
12 - 45	2 - 4 mm
50 - 145	3 - 6 mm
150 - 220	4 - 10 mm
Over 230	15 - 45 mm

Piston Guide

D H8	d f7	E +0,2	W	Part N°.	Part N°.	Part N°.
16,00	12,90	4,00	1,55	PWR 16/12,9x4-9600	PWR 16/12,9x4-9610	
16,00	11,00	5,60	2,50	PWR 16/11x5,6-9600	PWR 16/11x5,6-9610	PWR 16/11x5,6-9210
20,00	16,90	4,00	1,55	PWR 20/16,9x4-9600	PWR 20/16,9x4-9610	
20,00	15,00	5,60	2,50	PWR 20/15x5,6-9600	PWR 20/15x5,6-9610	PWR 20/15x5,6-9210
22,00	17,00	5,60	2,50	PWR 22/17x5,6-9600	PWR 22/17x5,6-9610	PWR 22/17x5,6-9210
25,00	21,90	4,00	1,55	PWR 25/21,9x4-9600	PWR 25/21,9x4-9610	
25,00	20,00	5,60	2,50	PWR 25/20x5,6-9600	PWR 25/20x5,6-9610	PWR 25/20x5,6-9210
32,00	28,90	4,00	1,55	PWR 32/28,9x4-9600	PWR 32/28,9x4-9610	
32,00	27,00	5,60	2,50	PWR 32/27x5,6-9600	PWR 32/27x5,6-9610	PWR 32/27x5,6-9210
40,00	35,00	5,60	2,50	PWR 40/35x5,6-9600	PWR 40/35x5,6-9610	PWR 40/35x5,6-9210
50,00	45,00	5,60	2,50	PWR 50/45x5,6-9600	PWR 50/45x5,6-9610	PWR 50/45x5,6-9210
63,00	58,00	5,60	2,50	PWR 63/58x5,6-9600	PWR 63/58x5,6-9610	PWR 63/58x5,6-9210
63,00	58,00	9,70	2,50	PWR 63/58x9,7-9600	PWR 63/58x9,7-9610	PWR 63/58x9,7-9210
80,00	75,00	5,60	2,50	PWR 80/75x5,6-9600	PWR 80/75x5,6-9610	PWR 80/75x5,6-9210
80,00	75,00	9,70	2,50	PWR 80/75x9,7-9600	PWR 80/75x9,7-9610	PWR 80/75x9,7-9210
100,00	95,00	5,60	2,50	PWR 100/95x5,6-9600	PWR 100/95x5,6-9610	PWR 100/95x5,6-9210
100,00	95,00	9,70	2,50	PWR 100/95x9,7-9600	PWR 100/95x9,7-9610	PWR 100/95x9,7-9210
125,00	120,00	5,60	2,50	PWR 125/120x5,6-9600	PWR 125/120x5,6-9610	PWR 125/120x5,6-9210
125,00	120,00	9,70	2,50	PWR 125/120x9,7-9600	PWR 125/120x9,7-9610	PWR 125/120x9,7-9210
140,00	135,00	9,70	2,50	PWR 140/135x9,7-9600	PWR 140/135x9,7-9610	PWR 140/135x9,7-9210
140,00	135,00	15,00	2,50	PWR 140/135x15-9600	PWR 140/135x15-9610	PWR 140/135x15-9210
160,00	155,00	9,70	2,50	PWR 160/155x9,7-9600	PWR 160/155x9,7-9610	PWR 160/155x9,7-9210
160,00	155,00	15,00	2,50	PWR 160/155x15-9600	PWR 160/155x15-9610	PWR 160/155x15-9210
180,00	175,00	9,70	2,50	PWR 180/175x9,7-9600	PWR 180/175x9,7-9610	PWR 180/175x9,7-9210
180,00	175,00	15,00	2,50	PWR 180/175x15-9600	PWR 180/175x15-9610	PWR 180/175x15-9210
200,00	195,00	9,70	2,50	PWR 200/195x9,7-9600	PWR 200/195x9,7-9610	PWR 200/195x9,7-9210
200,00	195,00	15,00	2,50	PWR 200/195x15-9600	PWR 200/195x15-9610	PWR 200/195x15-9210
220,00	215,00	9,70	2,50	PWR 220/215x9,7-9600	PWR 220/215x9,7-9610	PWR 220/215x9,7-9210
220,00	215,00	15,00	2,50	PWR 220/215x15-9600	PWR 220/215x15-9610	PWR 220/215x15-9210
250,00	245,00	9,70	2,50	PWR 250/245x9,7-9600	PWR 250/245x9,7-9610	PWR 250/245x9,7-9210
250,00	245,00	15,00	2,50	PWR 250/245x15-9600	PWR 250/245x15-9610	PWR 250/245x15-9210
280,00	275,00	9,70	2,50	PWR 280/275x9,7-9600	PWR 280/275x9,7-9610	PWR 280/275x9,7-9210
280,00	275,00	15,00	2,50	PWR 280/275x15-9600	PWR 280/275x15-9610	PWR 280/275x15-9210

Guide Rings
PWR, RWR

Piston Guide

D H8	d f7	E +0,2	W	Part N°.	Part N°.	Part N°.
280,00	272,00	25,00	4,00	PWR 280/272x25-9600	PWR 280/272x25-9610	
320,00	315,00	15,00	2,50	PWR 320/315x15-9600	PWR 320/315x15-9610	PWR 320/315x15-9210
320,00	315,00	25,00	2,50	PWR 320/315x25-9600	PWR 320/315x25-9610	PWR 320/315x25-9210
320,00	312,00	25,00	4,00	PWR 320/312x25-9600	PWR 320/312x25-9610	
360,00	355,00	15,00	2,50	PWR 360/355x15-9600	PWR 360/355x15-9610	PWR 360/355x15-9210
360,00	355,00	25,00	2,50	PWR 360/355x25-9600	PWR 360/355x25-9610	PWR 360/355x25-9210
360,00	352,00	25,00	4,00	PWR 360/352x25-9600	PWR 360/352x25-9610	
400,00	395,00	15,00	2,50	PWR 400/395x15-9600	PWR 400/395x15-9610	PWR 400/395x15-9210
400,00	395,00	25,00	2,50	PWR 400/395x25-9600	PWR 400/395x25-9610	PWR 400/395x25-9210
400,00	392,00	25,00	4,00	PWR 400/392x25-9600	PWR 400/392x25-9610	
450,00	445,00	15,00	2,50			PWR 450/445x15-9210
450,00	445,00	25,00	2,50			PWR 450/445x25-9210
500,00	495,00	15,00	2,50			PWR 500/495x15-9210
500,00	495,00	25,00	2,50			PWR 500/495x25-9210

Rod Guide

d f7	D H8	E +0,2	W	Part N°.	Part N°.	Part N°.
12,00	15,10	4,00	1,55	RWR 12/15,1x4-9600	RWR 12/15,1x4-9610	
14,00	17,10	4,00	1,55	RWR 14/17,1x4-9600	RWR 14/17,1x4-9610	
16,00	19,10	4,00	1,55	RWR 16/19,1x4-9600	RWR 16/19,1x4-9610	
18,00	21,10	4,00	1,55	RWR 18/21,1x4-9600	RWR 18/21,1x4-9610	
20,00	23,10	4,00	1,55	RWR 20/23,1x4-9600	RWR 20/23,1x4-9610	
22,00	25,10	4,00	1,55	RWR 22/25,1x4-9600	RWR 22/25,1x4-9610	
25,00	28,10	4,00	1,55	RWR 25/28,1x4-9600	RWR 25/28,1x4-9610	
25,00	30,00	5,60	2,50	RWR 25/30x5,6-9600	RWR 25/30x5,6-9610	RWR 25/30x5,6-9210
28,00	31,10	4,00	1,55	RWR 28/31,1x4-9600	RWR 28/31,1x4-9610	
28,00	33,00	5,60	2,50	RWR 28/33x5,6-9600	RWR 28/33x5,6-9610	RWR 28/33x5,6-9210
32,00	37,00	5,60	2,50	RWR 32/37x5,6-9600	RWR 32/37x5,6-9610	RWR 32/37x5,6-9210
32,00	37,00	9,70	2,50	RWR 32/37x9,7-9600	RWR 32/37x9,7-9610	RWR 32/37x9,7-9210
36,00	41,00	5,60	2,50	RWR 36/41x5,6-9600	RWR 36/41x5,6-9610	RWR 36/41x5,6-9210
36,00	41,00	9,70	2,50	RWR 36/41x9,7-9600	RWR 36/41x9,7-9610	RWR 36/41x9,7-9210
40,00	45,00	5,60	2,50	RWR 40/45x5,6-9600	RWR 40/45x5,6-9610	RWR 40/45x5,6-9210
40,00	45,00	9,70	2,50	RWR 40/45x9,7-9600	RWR 40/45x9,7-9610	RWR 40/45x9,7-9210
45,00	50,00	5,60	2,50	RWR 45/50x5,6-9600	RWR 45/50x5,6-9610	RWR 45/50x5,6-9210
45,00	50,00	9,70	2,50	RWR 45/50x9,7-9600	RWR 45/50x9,7-9610	RWR 45/50x9,7-9210
50,00	55,00	5,60	2,50	RWR 50/55x5,6-9600	RWR 50/55x5,6-9610	RWR 50/55x5,6-9210
50,00	55,00	9,70	2,50	RWR 50/55x9,7-9600	RWR 50/55x9,7-9610	RWR 50/55x9,7-9210
56,00	61,00	5,60	2,50	RWR 56/61x5,6-9600	RWR 56/61x5,6-9610	RWR 56/61x5,6-9210
56,00	61,00	9,70	2,50	RWR 56/61x9,7-9600	RWR 56/61x9,7-9610	RWR 56/61x9,7-9210
63,00	68,00	5,60	2,50	RWR 63/68x5,6-9600	RWR 63/68x5,6-9610	RWR 63/68x5,6-9210
63,00	68,00	9,70	2,50	RWR 63/68x9,7-9600	RWR 63/68x9,7-9610	RWR 63/68x9,7-9210
70,00	75,00	5,60	2,50	RWR 70/75x5,6-9600	RWR 70/75x5,6-9610	RWR 70/75x5,6-9210
70,00	75,00	9,70	2,50	RWR 70/75x9,7-9600	RWR 70/75x9,7-9610	RWR 70/75x9,7-9210
80,00	85,00	9,70	2,50	RWR 80/85x9,7-9600	RWR 80/85x9,7-9610	RWR 80/85x9,7-9210
80,00	85,00	15,00	2,50	RWR 80/85x15-9600	RWR 80/85x15-9610	RWR 80/85x15-9210
90,00	95,00	9,70	2,50	RWR 90/95x9,7-9600	RWR 90/95x9,7-9610	RWR 90/95x9,7-9210
90,00	95,00	15,00	2,50	RWR 90/95x15-9600	RWR 90/95x15-9610	RWR 090/95x15-9210
100,00	105,00	9,70	2,50	RWR 100/105x9,7-9600	RWR 100/105x9,7-9610	RWR 100/105x9,7-9210
100,00	105,00	15,00	2,50	RWR 100/105x15-9600	RWR 100/105x15-9610	RWR 100/105x15-9210
110,00	115,00	9,70	2,50	RWR 110/115x9,7-9600	RWR 110/115x9,7-9610	RWR 110/115x9,7-9210
110,00	115,00	15,00	2,50	RWR 110/115x15-9600	RWR 110/115x15-9610	RWR 110/115x15-9210
125,00	130,00	9,70	2,50	RWR 125/130x9,7-9600	RWR 125/130x9,7-9610	RWR 125/130x9,7-9210
125,00	130,00	15,00	2,50	RWR 125/130x15-9600	RWR 125/130x15-9610	RWR 125/130x15-9210
140,00	145,00	9,70	2,50	RWR 140/145x9,7-9600	RWR 140/145x9,7-9610	RWR 140/145x9,7-9210
140,00	145,00	15,00	2,50	RWR 140/145x15-9600	RWR 140/145x15-9610	RWR 140/145x15-9210
160,00	165,00	9,70	2,50	RWR 160/165x9,7-9600	RWR 160/165x9,7-9610	RWR 160/165x9,7-9210
160,00	165,00	15,00	2,50	RWR 160/165x15-9600	RWR 160/165x15-9610	RWR 160/165x15-9210
180,00	185,00	9,70	2,50	RWR 180/185x9,7-9600	RWR 180/185x9,7-9610	RWR 180/185x9,7-9210
180,00	185,00	15,00	2,50	RWR 180/185x15-9600	RWR 180/185x15-9610	RWR 180/185x15-9210
200,00	205,00	15,00	2,50	RWR 200/205x15-9600	RWR 200/205x15-9610	RWR 200/205x15-9210
200,00	205,00	25,00	2,50	RWR 200/205x25-9600	RWR 200/205x25-9610	RWR 200/205x25-9210

Further sizes available up to Ø 2500 mm on request

Guide Rings
PWR, RWR

Example for ordering:

PWR 63/16x9,7-9600

Type
Bore diameter D
Groove diameter d
Groove width
Standard material

Radial thickness:

radial thickness 1.55 mm
radial thickness 2.00 mm
radial thickness 2.50 mm
radial thickness 3.00 mm
radial thickness 4.00 mm
radial thickness 5.00 mm

Groove Width:

Groove width 4.00 mm
Groove width 5.60 mm
Groove width 9.70 mm
Groove width 15.00 mm
Groove width 25.00 mm

Material :

Phenolic with fabric	AF-9600
Phenolic with fabric & graphite	AF-9610
Polyester+PTFE Turquoise	AF-9200
Polyester+Graphite	AF-9210

Note: The rings are delivered by us with bevel cut (standard). The split "m" necessary for sealing function is duly considered herin.

WARNING: Limits of application stated herein are standard values. They could be individually transgressed with due consideration to respective service conditions. In the event of a large duty cycle, pulsating operation and other complex operational conditions, simultaneous transgression of these values is not recommended. Due to a large variety of service conditions that may arise in course of actual use, the company does not take responsibility of or guarantee the functional accuracy of the individual components. Rights for changes are reserved.

product index

Profile	Type	Specification	Limitations of Use		Material	
			Temperature	Pressure	Sealing element	Page
	OR	O-Ring metric	-60 up to +280° C		Rubber Elastomer	206
	OR	O-Ring ASA 568A	-60 up to +280° C		Rubber Elastomer	206
	GDS	Replacement of O-ring + back-up ring	-40 up to +110° C	up to 50 Mpa (500 bar)	AU Polyurethane	249

Regarding the great variety of practice applications please ask our customer service department personally for missing types or dimensions

O-Ring

The O-ring is the most cost effective and convenient sealing element available to the user. Due to its simple form, i.e. a closed gasket with a circular cross section and a multitude of usable materials of construction, it finds use in almost all static and dynamic (with back-up ring) areas of application. When choosing the cord diameter, a reasonable thickness value must be chosen, particularly for dynamic applications.

Special Features:

- Cost effective groove geometry
- Economic construction
- Double acting
- High pressure and temperature range
- Low on space requirements
- Extensive series of sizes
- Expansion stretch of O-ring up to max. 10%
- Compression of O-ring up to max. 0,5-1,5% depending of size

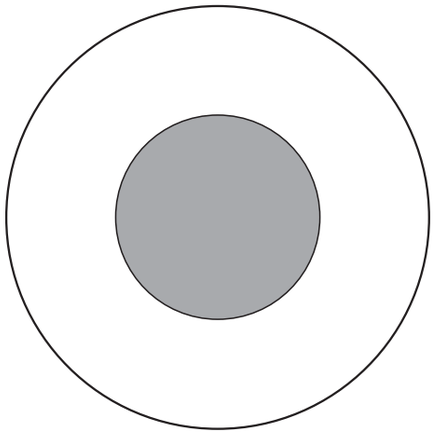

Pressure of operation:static to 20Mpa (200 bar) without back ring
to 40Mpa (400 bar) with back ring
to 200Mpa (2000 bar) with special back ring
:dynamic over 5Mpa (50 bar) with back ring

Speed :dynamic 0,5 m/s max.
:rotation 2,0 m/s max.

Temperature : depending of material -60° C up to +280° C

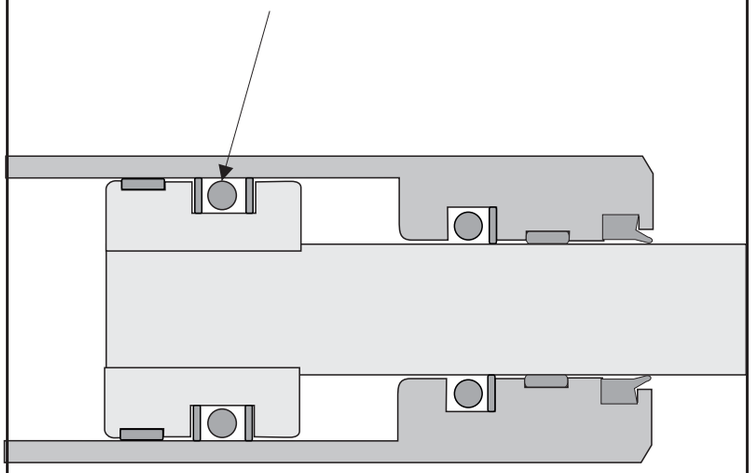

O-Ring materials - main types

Due to the wide variety of synthetic elastomers that are available in the market, O-rings can be manufactured to withstand temperature from -60 C up to +280 C and a range of fluids environments. Obviously, all the combinations of material are not acting in the same way. Therefore we include a table below that provides an overview of the standard materials and the proper diameter data with reference to relevant applications.

It is not unusual to develop non-standard-materials to cater for the influence of some factors that might influence conditions of use. We must draw your attention to the fact, that most materials of construction have been certified by i.e.

Material Code Accofluor	Hardness Shore A	Temperature °C	Resistant to / Application use	Specification as per ASTM 2000 D
N55 N60 N70 EA14	55 ± 5 60 ± 5 70 ± 5	-30 - +130 -30 - +130 -30 - +130	Standard material in pneumatics and hydraulics resistant to mineral oils, native and animal origin oils, silicone oils and greases, petrol, natural gas,	2BG715 B34 EO14 EO34 EF11 EF21 F16
N80 N85 N90	80 ± 5 85 ± 5 90 ± 5	-25 - +130 -25 - +130 -25 - +130	water up to 70° C, flame resistant fluids - HFA (oil in water emulsion) - HFB (water in oil emulsion) - HFC (aqueous solutions of polyalkylene glycol)	7BG915 B14 EO14 EO34 EF11 EF21 EA14
NB7	75 ± 5	-30 - +130	as above / low swelling in fuels	2BG715 B14Z_1 Z_1 - in Benzine (48h à 23 °C) rV = 2 %
NA6 NA7 NF7 NP7	60 ± 5 70 ± 5 70 ± 5 70 ± 5	-30 - +130 -30 - +130 -42 - +130 -30 - +130	For drinking water and food stuffs optimal antifreezing quality Low compression strain (peroxide cross-linked)	2BG715 B14 EO14 EO34 EA14 2BG715 B14 EO14 EO34 F17 EA14 3BG715 B14 EO14 EO34 Z_1
E60 E70	60 ± 5 70 ± 5	-50 - +150 -50 - +150	Outstanding resistance to atmospheric conditions effective substances, hot water, steam up to 150 C, good resistance to ozone, phosphate ester bases, and brake fluids. Not resistant to mineral oil products	2DA615 A26 B36 B32 3DA715 A26 B36 C32 F19 EA14
C60 C70	60 ± 5 70 ± 5	-30 - +120 -25 - +120	Outstanding longterm resistance to atmospheric conditions even effective factors in combination with saline-water and UV rays. Good restistance to chemicals and freezing mixtures.	2BC620 A14 EO14 EO34 F17 2BC720 A14 EO14 EO34 F17
S50 S60 S70	50 ± 5 60 ± 5 70 ± 5	-60 - +220 -60 - +220 -50 - +220	Normally used for static seals, outstanding resistance behaviour even up to high temperature and in hot dry air, in combination with ozone.	7GE707 A19 B37 EO16 EO36 F19 EA14
F60 F75 F80	60 ± 5 75 ± 5 80 ± 5	-30 - +240 -25 - +240 -25 - +240	For static and dynamic sealing in combination with aliphatic and an ozone itself at hight temperatures.	2HK715 A1-10 B38 EF31 EO78
	Shore D			
AF-1012	52 ± 2	-60 - +200	Pure PTFE outstanding chemical restistance / Applications in fluid, chemical and medical industry	

Many more material combinations are available for special requirements

O-Ring

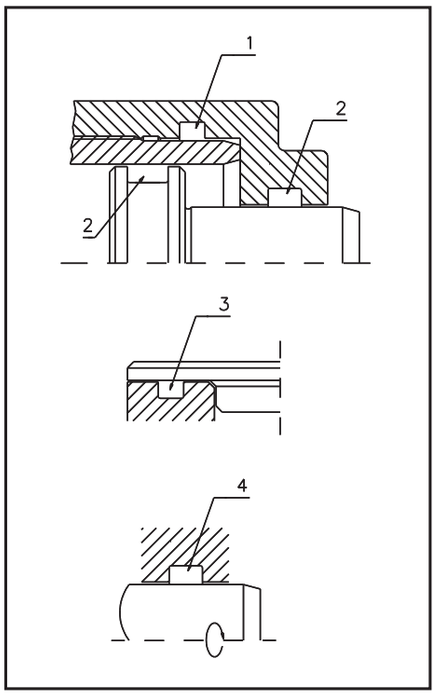

Mounting methods:

1. radial static

2. radial dynamic
with this method, take care that the internal diameter of O-ring nearly corresponds to the rod diameter (internally sealing) or the groove diameter (externally sealing) as the case may be.

3. axial static
Direction of pressure is important. If the pressure acts from the inside , the O-ring must fit in with the external diameter of groove, or may need to be compressed by 0,5 -1,5 %. If pressure acts from outside the O-ring is to fit in with internal diameter of groove or O-ring may need to be stretched by 6 %

4. rotary internal sealing
To reduce centrifugal forces, the O-ring is to be incorporated in the resting parts / static part of the housing. Then, the internal diameter of O-ring must be 2 - 4 % larger than the shaft and should be arranged as near as possible to the medium to sealed (heat dissipation)

Tolerances for O-rings

O-rings supplied conform to the following norms AS 568 A, BS 1806, ISO 3601/1, DIN 3771
Tolerance value information only holds good for O-rings in NBR 70 Shore A.

Diameter:

up	to	Tol. ± mm.
1,00	3,00	0,13
3,10	4,90	0,14
5,00	6,90	0,15
7,00	8,00	0,16
8,10	10,00	0,17
10,10	14,00	0,18
14,10	16,00	0,20
16,10	18,00	0,21
18,10	20,00	0,22
20,10	25,00	0,25
25,10	30,00	0,28
30,10	35,00	0,33
35,10	40,00	0,38
40,10	50,00	0,42
50,10	60,00	0,54
60,10	80,00	0,65
80,10	100,00	0,84
100,10	120,00	0,95
120,10	150,00	1,20
150,10	180,00	1,40
180,10	250,00	1,80
250,10	300,00	2,10
300,10	350,00	2,50
350,10	400,00	2,80
400,10	500,00	3,40
500,10	600,00	4,00

cord strength:

up	to	Tol. ± mm.
1,00	1,80	0,08
1,81	2,65	0,09
2,66	3,55	0,10
3,56	5,35	0,13
5,36	7,00	0,15
7,01	8,00	0,17
8,01	10,00	0,20
10,01	15,00	0,25

Compression of O-rings: dynamic 8%-20%, static 15%-30%
Min. value in hydraulics 8%.
These values are dependent on respective cord strength

For operational pressure > 50 bar (dynamic) or for larger sealing splits, we recommend the use of thrust rings / back-up rings.

Surface Finish:

Application	Surface	R max µm	Rz µm	Ra µm
radial dynamic	dynamic	1,0-2,5	0,63-1,60	0,10-0,40
rotary	groove diameter	≤10,00	≤6,30	≤1,60
	groove flank	≤10,00	≤6,30	≤1,60
rotary static	static	≤10,00	≤6,30	≤1,60
axial static	groove flank	≤16,00	≤10,00	≤1,60
		≤16,00	≤10,00	≤3,20
	pulsating pressure:			
	static	≤6,30	≤4,00	≤0,80
	groove diameter	≤10,00	≤6,30	≤1,60
	groove flank	≤10,00	≤6,30	≤1,60

Fit tolerances for static and dynamic applications:

pressure	O-ring hardness	Tolerances
≤ 2 Mpa (20 bar)	min. 70 SH A	H8/f7
≤ 7 Mpa (70 bar)	min. 70 SH A	H8/f7
≤ 10 Mpa (100 bar)	min. 70 SH A + thrust ring	H8/f7
≤ 10 Mpa (100 bar)	min. 70 SH A	H7/g6
≤ 35 Mpa (350 bar)	min. 70 SH A + thrust ring	H7/g6

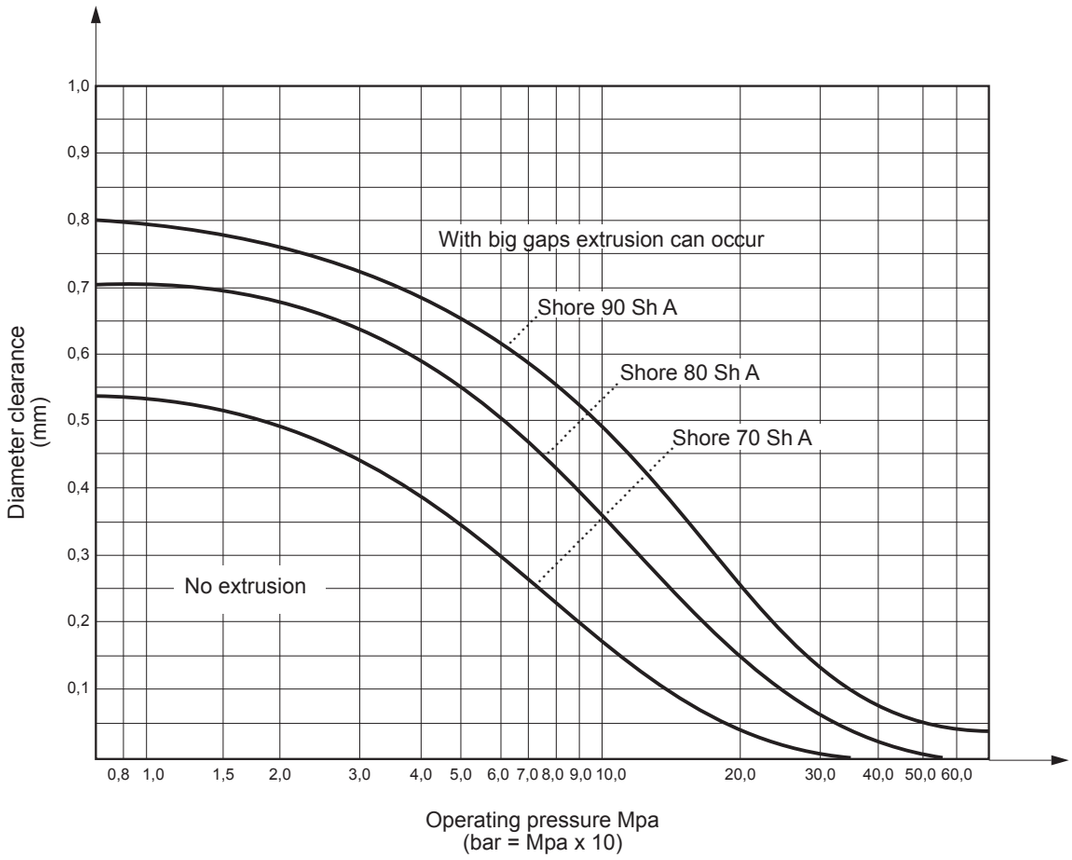

O-Ring

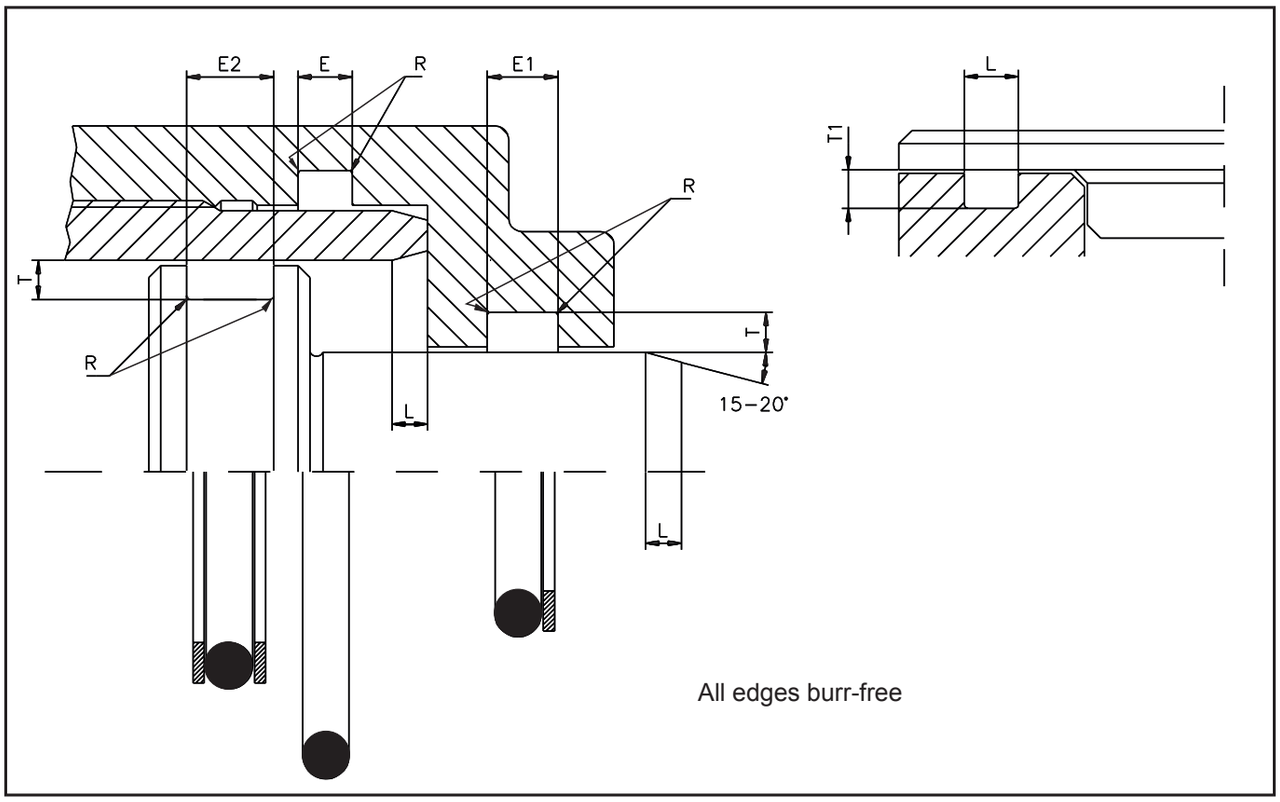

Groove sizes

O-Ring cord	dynamic	static	without back-up ring	1 back-up ring	2 back-up ring	Radius	Slide in bevel
S	T ±0,05	T1 ±0,05	E ±0,2	E1 ±0,2	E2 ±0,2	R (max)	L (min)
1,00	0,75	0,65	1,40			0,20	1,10
1,50	1,25	1,10	2,00	3,00	4,00	0,20	1,50
1,60	1,30	1,20	2,10	3,10	4,10	0,20	1,50
1,78	1,50	1,30	2,50	4,00	5,50	0,20	1,50
1,90	1,55	1,40	2,60	4,10	5,60	0,20	1,50
2,00	1,70	1,60	2,70	4,20	5,70	0,20	1,50
2,40	2,00	1,90	3,20	4,70	6,20	0,20	1,50
2,50	2,15	1,95	3,30	4,80	6,30	0,20	1,50
2,62	2,25	2,10	3,50	5,00	6,50	0,20	1,50
2,70	2,40	2,10	3,60	5,10	6,60	0,20	1,50
3,00	2,50	2,40	3,90	5,50	7,00	0,30	1,80
3,50/3,53	3,05	2,95	4,50	6,00	7,50	0,40	1,80
3,60	3,15	2,95	4,70	6,20	7,70	0,40	1,80
4,00	3,50	3,30	5,00	6,50	8,00	0,40	1,80
4,50	4,00	3,60	5,80	7,60	9,40	0,40	2,70
5,00	4,40	4,10	6,50	8,30	10,10	0,50	2,70
5,33	4,70	4,50	7,00	8,80	10,60	0,50	2,70
5,70	5,00	4,85	7,30	9,10	10,90	0,50	2,70
6,00	5,40	4,90	7,50	9,30	11,10	0,60	3,60
6,99/7,00	6,10	5,90	9,50	12,00	14,50	0,60	3,60
8,00	7,10	6,40	10,40	12,90	15,40	0,60	4,20
8,40	7,50	7,25	11,00	13,50	16,00	0,60	4,20
9,00	8,10	7,60	11,70	14,20	16,70	0,60	10,00
10,00	9,00	8,00	13,00	15,50	18,00	0,60	10,00

O-Ring

di	s	AS 568A BS 1806	Part N°.
1,42	1,52	003	OR 1,42x1,52N70
1,78	1,78	004	OR 1,78x1,78N70
2,57	1,78	005	OR 2,57x1,78N70
2,90	1,78	006	OR 2,9x1,78N70
3,17	1,78	801	OR 3,17x1,78N70
3,68	1,78	007	OR 3,68x1,78N70
4,48	1,78	008	OR 4,48x1,78N70
4,76	1,78	802	OR 4,76x1,78N70
5,28	1,78	009	OR 5,28x1,78N70
6,07	1,78	010	OR 6,07x1,78N70
6,35	1,78	803	OR 6,35x1,78N70
6,75	1,78	610	OR 6,75x1,78N70
7,66	1,78	011	OR 7,66x1,78N70
8,73	1,78	611	OR 8,73x1,78N70
9,25	1,78	012	OR 9,25x1,78N70
10,82	1,78	013	OR 10,82x1,78N70
11,11	1,78	806	OR 11,11x1,78N70
12,42	1,78	014	OR 12,42x1,78N70
14,00	1,78	015	OR14,0x1,78N70
15,60	1,78	016	OR 15,6x1,78N70
17,17	1,78	017	OR 17,17x1,78N70
18,77	1,78	018	OR 18,77x1,78N70
20,35	1,78	019	OR 20,35x1,78N70
21,95	1,78	020	OR 21,95x1,78N70
23,53	1,78	021	OR 23,53x1,78N70
25,12	1,78	022	OR 25,12x1,78N70
26,70	1,78	023	OR 26,7x1,78N70
28,30	1,78	024	OR 28,3x1,78N70
29,87	1,78	025	OR 29,87x1,78N70
31,47	1,78	026	OR 31,47x1,78N70
33,05	1,78	027	OR 33,05x1,78N70
34,65	1,78	028	OR 34,65x1,78N70
36,27	1,78	517	OR 36,27x1,78N70
37,82	1,78	029	OR 37,82x1,78N70
39,45	1,78	519	OR 39,45x1,78N70
41,00	1,78	030	OR 41,0x1,78N70
44,17	1,78	031	OR 44,17x1,78N70
47,35	1,78	032	OR 47,35x1,78N70
50,52	1,78	033	OR 50,52x1,78N70
53,70	1,78	034	OR 53,7x1,78N70
56,87	1,78	035	OR 53,87x1,78N70
60,05	1,78	036	OR 60,05x1,78N70
63,22	1,78	037	OR 63,22x1,78N70
66,40	1,78	038	OR 66,4x1,78N70
69,57	1,78	039	OR 69,57x1,78N70
72,75	1,78	040	OR 72,75x1,78N70
75,92	1,78	041	OR 75,92x1,78N70
79,00	1,78	532	OR 79,0x1,78N70
82,27	1,78	042	OR 82,27x1,78N70
85,34	1,78	534	OR 85,34x1,78N70
88,62	1,78	043	OR 88,62x1,78N70
91,70	1,78	536	OR 91,7x1,78N70
94,97	1,78	044	OR 94,97x1,78N70
98,05	1,78	538	OR 98,05x1,78N70
101,32	1,78	045	OR 101,32x1,78N70
104,40	1,78	540	OR104,1x1,78N70
107,67	1,78	046	OR 107,67x1,78N70
110,74	1,78	542	OR 110,74x1,78N70

di	s	AS 568A BS 1806	Part N°.
117,07	1,78	544	OR 117,07x1,78N70
120,37	1,78	048	OR 120,37x1,78N70
123,44	1,78	546	OR 123,44x1,78N70
126,72	1,78	049	OR 126,72x1,78N70
129,40	1,78	548	OR 129,4x1,78N70
133,04	1,78	050	OR 133,04x1,78N70
151,64	1,78	555	OR 151,64x1,78N70
154,81	1,78	556	OR 154,81x1,78N70
2,06	2,62	103	OR 2,06x2,62N70
2,84	2,62	104	OR 2,84x2,62-N70
3,63	2,62	105	OR 3,63x2,62N70
4,42	2,62	106	OR 4,42x2,62N70
5,23	2,62	107	OR5,23x2,62N70
6,02	2,62	108	OR 6,02x2,62N70
7,60	2,62	109	OR 7,6x2,62N70
9,19	2,62	110	OR 9,19x2,62N70
9,92	2,62	613	OR 9,92x2,62N70
10,78	2,62	111	OR 10,78x2,62N70
11,91	2,62	614	OR 10,78x2,62N70
12,37	2,62	112	OR 12,37x2,62N70
13,10	2,62	615	OR 13,1x2,62N70
13,95	2,62	113	OR 13,95x2,62N70
15,08	2,62	616	OR 15,08x2,62N70
15,54	2,62	114	OR 15,54x2,62N70
15,88	2,62	809	OR 15,88x2,62N70
17,13	2,62	115	OR 17,13x2,62N70
17,86	2,62	617	OR 17,86x2,62N70
18,72	2,62	116	OR 18,72x2,62N70
20,29	2,62	117	OR 20,29x2,62N70
20,62	2,62	812	OR 20,62x2,62N70
21,89	2,62	118	OR 21,89x2,62N70
22,22	2,62	813	OR 22,22x2,62N70
23,47	2,62	119	OR 23,47x2,62N70
23,81	2,62	814	OR 23,81x2,62N70
25,07	2,62	120	OR 25,07x2,62N70
26,64	2,62	121	OR 26,64x2,62N70
28,24	2,62	122	OR 28,24x2,62N70
29,82	2,62	123	OR 29,82x2,62N70
31,42	2,62	124	OR 31,42x2,62N70
32,99	2,62	125	OR 32,99x2,62N70
34,59	2,62	126	OR 34,59x2,62N70
36,17	2,62	127	OR 36,17x2,62N70
37,77	2,62	128	OR 37,77x2,62N70
39,34	2,62	129	OR 39,34x2,62N70
40,94	2,62	130	OR 40,94x2,62N70
42,52	2,62	131	OR 42,52x2,62N70
44,12	2,62	132	OR44,12x2,62N70
45,69	2,62	133	OR 45,69x2,62N70
47,29	2,62	134	OR 47,29x2,62N70
48,90	2,62	135	OR 48,9x2,62N70
50,47	2,62	136	OR 50,47x2,62N70
52,07	2,62	137	OR 52,07x2,62N70
53,64	2,62	138	OR 53,64x2,62N70
55,25	2,62	139	OR 55,25x2,62N70
56,82	2,62	140	OR 55,82x2,62N70
58,42	2,62	141	OR 58,42x2,62N70
59,99	2,62	142	OR 59,99x2,62N70
61,60	2,62	143	OR 61,6x2,62N70

O-Ring

di	s	AS 568A BS 1806	Part N°.
64,77	2,62	145	OR 64,77x2,62N70
66,34	2,62	146	OR 66,34x2,62N70
67,95	2,62	147	OR 67,95x2,62N70
69,52	2,62	148	OR 69,52x2,62N70
71,12	2,62	149	OR 71,12x2,62N70
72,69	2,62	150	OR 72,69x2,62N70
74,30	2,62	640	OR 74,3x2,62N70
75,87	2,62	151	OR 75,87x2,62N70
77,47	2,62	641	OR 77,47x2,62N70
80,60	2,62	642	OR 80,6x2,62N70
82,22	2,62	152	OR 82,22x2,62N70
83,80	2,62	643	OR 83,8x2,62N70
88,57	2,62	153	OR 88,57x2,62N70
94,92	2,62	154	OR 94,92x2,62N70
101,27	2,62	155	OR 101,27x2,62N70
107,62	2,62	156	OR 107,62x2,62N70
113,97	2,62	157	OR 113,97x2,62N70
120,32	2,62	158	OR 120,32x2,62N70
126,67	2,62	159	OR 126,67x2,62N70
133,02	2,62	160	OR 133,02x2,62N70
139,37	2,62	161	OR 139,37x2,62N70
145,72	2,62	162	OR 145,72x2,62N70
152,07	2,62	163	OR 152,07x2,62N70
158,42	2,62	164	OR 158,42x2,62N70
164,77	2,62	165	OR 164,77x2,62N70
171,12	2,62	166	OR 171,12x2,62N70
177,47	2,62	167	OR 177,47x2,62N70
183,82	2,62	168	OR 183,32x2,62N70
190,17	2,62	169	OR 190,17x2,62N70
196,53	2,62	170	OR 196,53x2,62N70
202,87	2,62	171	OR 202,87x2,62N70
209,23	2,62	172	OR 209,23x2,62N70
215,57	2,62	173	OR 215,57x2,62N70
221,92	2,62	174	OR 221,92x2,62N70
228,27	2,62	175	OR 228,27x2,62N70
234,63	2,62	176	OR 234,63x2,62N70
240,98	2,62	177	OR 240,98x2,62N70
247,33	2,62	178	OR 243,33x2,62N70
4,34	3,53	201	OR 4,34x3,53N70
5,94	3,53	202	OR 5,94x3,53N70
7,52	3,53	203	OR 7,52x3,53N70
9,12	3,53	204	OR 9,12x3,53N70
10,69	3,53	205	OR 10,69x3,53N70
12,29	3,53	206	OR 12,29x3,53N70
13,87	3,53	207	OR 13,87x3,53N70
15,47	3,53	208	OR 15,47x3,53N70
17,04	3,53	209	OR 17,04x3,53N70
18,64	3,53	210	OR 18,64x3,53N70
20,22	3,53	211	OR 20,22x3,53N70
21,82	3,53	212	OR 21,82x3,53N70
23,39	3,53	213	OR 23,39x3,53N70
24,99	3,53	214	OR 24,99x3,53N70
25,80	3,53	618	OR 25,8x3,53N70
26,58	3,53	215	OR 26,58x3,53N70
28,17	3,53	216	OR 28,17x3,53N70
29,75	3,53	217	OR 29,75x3,53N70
31,34	3,53	218	OR 31,34x3,53N70
32,92	3,53	219	OR 32,92x3,53N70
34,52	3,53	220	OR 34,52x3,53N70
36,10	3,53	221	OR 36,1x3,53N70
37,70	3,53	222	OR 37,7x3,53N70

di	s	AS 568A BS 1806	Part N°.
39,69	3,53	824	OR 36,69x3,53N70
40,87	3,53	223	OR 40,87x3,53N70
41,28	3,53	825	OR 41,28x3,53N70
42,86	3,53	826	OR 42,86x3,53N70
44,04	3,53	224	OR 44,04x3,53N70
44,45	3,53	827	OR 44,45x3,53N70
46,04	3,53	828	OR 46,04x3,53N70
47,22	3,53	225	OR 47,22x3,53N70
47,63	3,53	829	OR47,63x3,53N70
49,22	3,53	830	OR 49,22x3,53N70
50,39	3,53	226	OR 50,39x3,53N70
50,80	3,53	831	OR 50,8x3,53N70
52,39	3,53	832	OR 52,39x3,53N70
53,57	3,53	227	OR 53,57x3,53N70
55,56	3,53	834	OR 55,56x3,53N70
56,70	3,53	228	OR 56,7x3,53N70
57,15	3,53	835	OR 57,15x3,53N70
58,74	3,53	836	OR 58,74x3,53N70
59,92	3,53	229	OR 59,92x3,53N70
60,30	3,53	837	OR 60,3x3,53N70
61,90	3,53	838	OR 61,9x3,53N70
63,09	3,53	230	OR 63,09x3,53N70
63,50	3,53	839	OR 63,5x3,53N70
65,09	3,53	840	OR 65,09x3,53N70
66,27	3,53	231	OR 66,27x3,53N70
66,68	3,53	841	OR 66,68x3,53N70
68,26	3,53	842	OR 68,26x3,53N70
69,44	3,53	232	OR 69,44x3,53N70
69,85	3,53	843	OR 69,85x3,53N70
71,44	3,53	844	OR 71,44x3,53N70
72,62	3,53	233	OR 72,62x3,53N70
73,03	3,53	845	OR 73,03x3,53N70
74,61	3,53	846	OR 74,61x3,53N70
75,79	3,53	234	OR 75,79x3,53N70
78,97	3,53	235	OR 78,97x3,53N70
82,14	3,53	236	OR 82,14x3,53N70
85,32	3,53	237	OR 85,32x3,53N70
88,49	3,53	238	OR 88,49x3,53N70
91,67	3,53	239	OR 91,67x3,53N70
94,84	3,53	240	OR 94,84x3,53N70
98,02	3,53	241	OR 98,02x3,53N70
101,19	3,53	242	OR 101,19x3,53N70
104,37	3,53	243	OR 104,37x3,53N70
107,54	3,53	244	OR 107,54x3,53N70
110,72	3,53	245	OR 110,72x3,53N70
113,90	3,53	246	OR 113,9x3,53N70
117,07	3,53	247	OR 117,07x3,53N70
120,24	3,53	248	OR 120,24x3,53N70
123,42	3,53	249	OR 123,42x3,53N70
126,60	3,53	250	OR 126,6x3,53N70
129,77	3,53	251	OR 129,77x3,53N70
132,94	3,53	252	OR 132,94x3,53N70
136,12	3,53	253	OR 136,12x3,53N70
139,30	3,53	254	OR 139,3x3,53N70
142,47	3,53	255	OR 142,47x3,53N70
145,65	3,53	256	OR 145,65x3,53N70
148,82	3,53	257	OR 148,82x3,53N70
151,99	3,53	258	OR 151,99x3,53N70
158,34	3,53	259	OR 158,34x3,53N70
164,70	3,53	260	OR 164,7x3,53N70

O-Ring

di	s	AS 568A BS 1806	Part N°.
177,39	3,53	262	OR 177,39x3,53N70
183,75	3,53	263	OR 183,75x3,53N70
190,10	3,53	264	OR 190,1x3,53N70
196,44	3,53	265	OR 196,44x3,53N70
202,80	3,53	266	OR 202,8z3,53N70
209,14	3,53	267	OR 209,14x3,53N70
215,49	3,53	268	OR 215,49x3,53N70
221,84	3,53	269	OR 221,84x3,53N70
228,19	3,53	270	OR 228,19x3,53N70
234,54	3,53	271	OR 234,54x3,53N70
240,89	3,53	272	OR 240,89x3,53N70
247,25	3,53	273	OR 247,25x3,53N70
253,59	3,53	274	OR 253,59x3,53N70
266,29	3,53	275	OR 266,29x3,53N70
278,99	3,53	276	OR 278,99x3,53N70
291,70	3,53	277	OR 291,7x3,53N70
304,39	3,53	278	OR 304,39x3,53N70
329,80	3,53	279	OR 329,8x3,53N70
355,19	3,53	280	OR 355,19x3,53N70
380,60	3,53	281	OR 380,6x3,53N70
405,26	3,53	282	OR 405,26x3,53N70
430,66	3,53	283	OR 430,66x3,53N70
456,06	3,53	284	OR 456,06x3,53N70
10,46	5,33	309	OR 10,46x5,33N70
12,07	5,33	310	OR 13,64x5,33N70
13,64	5,33	311	OR 13,64x5,33N70
15,24	5,33	312	OR 15,24x5,33N70
16,81	5,33	313	OR 16,81x5,33N70
18,42	5,33	314	OR 18,42x5,33N70
19,99	5,33	315	OR 19,99x5,33N70
21,59	5,33	316	OR 21,59x5,33N70
23,16	5,33	317	OR 23,16x5,33N70
24,77	5,33	318	OR 24,77x5,33N70
26,34	5,33	319	OR 26,34x5,33N70
27,94	5,33	320	OR 27,94x5,33N70
29,51	5,33	321	OR 29,51x5,33N70
31,12	5,33	322	OR 31,12x5,33N70
32,69	5,33	323	OR 32,69x5,33N70
34,29	5,33	324	OR 34,29x5,33N70
37,47	5,33	325	OR 37,47x5,33N70
40,64	5,33	326	OR 40,64x5,33N70
43,82	5,33	327	OR 43,82x5,33N70
46,99	5,33	328	OR 46,99x5,33N70
50,17	5,33	329	OR 50,17x5,33N70
53,34	5,33	330	OR 53,34x5,33N70
56,52	5,33	331	OR 56,52x5,33N70
59,69	5,33	332	OR 59,69x5,33N70
62,87	5,33	333	OR 62,87x5,33N70
66,04	5,33	334	OR 66,04x5,33N70
69,22	5,33	335	OR 69,22x5,33N70
72,40	5,33	336	OR 72,4x5,33N70
74,63	5,33	619	OR 74,63x5,33N70
75,57	5,33	337	OR 75,57x5,33N70
78,74	5,33	338	OR 78,74x5,33N70
79,77	5,33	620	OR 79,77x5,33N70
81,92	5,33	339	OR 81,92x5,33N70
85,09	5,33	340	OR 85,09x5,33N70
88,27	5,33	341	OR 88,27x5,33N70
89,69	5,33	621	OR 89,69x5,33N70
91,44	5,33	342	OR 91,44x5,33N70

di	s	AS 568A BS 1806	Part N°.
97,79	5,33	344	OR 97,79x5,33N70
100,00	5,33	622	OR 100,0x5,33N70
100,97	5,33	345	OR 100,97x5,33N70
104,14	5,33	346	OR 104,14x5,33N70
107,32	5,33	347	OR 107,32x5,33N70
109,54	5,33	623	OR 109,54x5,33N70
110,49	5,33	348	OR 110,49,5,33N70
113,67	5,33	349	OR 113,67x5,33N70
116,84	5,33	350	OR 116,84x5,33N70
117,48	5,33	860	OR 117,48x5,33N70
120,02	5,33	351	OR 120,02x5,33N70
120,70	5,33	351A	OR 120,7x5,33N70
123,19	5,33	352	OR 123,19x5,33N70
123,80	5,33	352A	OR 123,8x5,33N70
126,37	5,33	353	OR 126,37x5,33N70
127,00	5,33	353A	OR 127,0x5,33N70
129,54	5,33	354	OR 129,54x5,33N70
130,20	5,33	354A	OR 130,2x5,33N70
132,72	5,33	355	OR 132,72x5,33N70
133,35	5,33	355A	OR 133,35x5,33N70
135,90	5,33	356	OR 135,9x5,33N70
136,53	5,33	356A	OR 136,53x5,33N70
139,07	5,33	357	OR 139,07x5,33N70
139,70	5,33	357A	OR 139,7x5,33N70
142,24	5,33	358	OR 142,24x5,33N70
142,88	5,33	868	OR 142,88x5,33N70
145,42	5,33	359	OR 145,42x5,33N70
146,05	5,33	359A	OR 146,05x5,33N70
148,59	5,33	360	OR 148,59x5,33N70
149,23	5,33	870	OR 149,23x5,33N70
151,77	5,33	361	OR 151,77x5,33N70
155,00	5,33	361A	OR 155,0x5,33N70
158,12	5,33	362	OR 158,12x5,33N70
161,30	5,33	362A	OR 161,3x5,33N70
164,47	5,33	363	OR 164,47x5,33N70
167,70	5,33	646	OR 167,7x5,33N70
170,82	5,33	364	OR 170,82x5,33N70
177,17	5,33	365	OR 177,17x5,33N70
183,52	5,33	366	OR 183,52x5,33N70
189,87	5,33	367	OR 189,52x5,33N70
196,22	5,33	368	OR 196,22x5,33N70
202,57	5,33	369	OR 202,57x5,33N70
208,92	5,33	370	OR 208,92x5,33N70
215,27	5,33	371	OR 215,27x5,33N70
221,62	5,33	372	OR 221,62x5,33N70
227,97	5,33	373	OR 227,97x5,33N70
234,32	5,33	374	OR 234,32x5,33N70
240,67	5,33	375	OR 240,67x5,33N70
247,02	5,33	376	OR 247,02x5,33N70
253,37	5,33	377	OR 253,37x5,33N70
266,07	5,33	378	OR 266,07x5,33N70
278,77	5,33	379	OR 278,77x5,33N70
291,47	5,33	380	OR 291,47x5,33N70
304,17	5,33	381	OR 304,17x5,33N70
329,57	5,33	382	OR 329,57x5,33N70
354,97	5,33	383	OR 354,97x5,33N70
380,37	5,33	384	OR 380,37x5,33N70
405,26	5,33	385	OR 405,26x5,33N70
430,66	5,33	386	OR 430,66x5,33N70
456,06	5,33	387	OR 456,06x5,33N70

di	s	AS 568A BS 1806	Part N°.
114,70	6,99	624	OR 114,7x6,99N70
116,84	6,99	426	OR 116,84x6,99N70
120,02	6,99	427	OR 120,02x6,99N70
123,19	6,99	428	OR 123,19x6,99N70
124,60	6,99	625	OR 124,6x6,99N70
126,37	6,99	429	OR 126,37x6,99N70
129,54	6,99	430	OR 129,54x6,99N70
132,72	6,99	431	OR 132,72x6,99N70
134,50	6,99	626	OR 134,5x6,99N70
135,80	6,99	432	OR 135,8x6,99N70
139,07	6,99	433	OR 139,07x6,99N70
142,24	6,99	434	OR 142,24x6,99N70
145,42	6,99	435	OR 145,42x6,99N70
148,59	6,99	436	OR 148,59x6,99N70
151,77	6,99	437	OR 151,77x6,99N70
155,60	6,99	872	OR 155,6x6,99N70
158,12	6,99	438	OR 158,12x6,99N70
159,50	6,99	627	OR 159,5x6,99N70
161,90	6,99	874	OR 161,9x6,99N70
164,47	6,99	439	OR 164,47x6,99N70
166,70	6,99	628	OR 166,7x6,99N70
168,30	6,99	876	OR 168,3x6,99N70
170,82	6,99	440	OR 170,82x6,99N70
174,60	6,99	878	OR 174,6x6,99N70
177,17	6,99	441	OR 177,17x6,99N70
181,00	6,99	441A	OR 181,0x6,99N70
183,52	6,99	442	OR 183,52x6,99N70
187,30	6,99	442A	OR 187,3x6,99N70
189,87	6,99	443	OR 189,87x6,99N70
193,70	6,99	443A	OR 193,7x6,99N70
196,22	6,99	444	OR 196,22x6,99N70
199,80	6,99	444A	OR 199,8x6,99N70
202,57	6,99	445	OR 202,57x6,99N70

di	s	AS 568A BS 1806	Part N°.
208,92	6,99	445A	OR 208,92x6,99N70
215,27	6,99	446	OR 215,27x6,99N70
221,62	6,99	446A	OR 221,62x6,99N70
227,97	6,99	447	OR 227,97x6,99N70
240,67	6,99	448	OR 240,67x6,99N70
247,00	6,99	448A	OR 247,0x6,99N70
253,57	6,99	449	OR 253,57x6,99N70
259,70	6,99	449A	OR 259,7x6,99N70
266,07	6,99	450	OR 266,07x6,99N70
272,40	6,99	450A	OR 272,4x6,99N70
278,77	6,99	451	OR 278,77x6,99N70
285,10	6,99	451A	OR 285,1x6,99N70
291,47	6,99	452	OR 291,47x6,99N70
297,80	6,99	452A	OR 297,8x6,99N70
304,17	6,99	453	OR 304,17x6,99N70
310,50	6,99	648	OR 310,5x6,99N70
316,87	6,99	454	OR 316,87x6,99N70
323,20	6,99	649	OR 323,2x6,99N70
329,57	6,99	455	OR 329,57x6,99N70
335,90	6,99	650	OR 335,9x6,99N70
342,27	6,99	456	OR 342,27x6,99N70
354,97	6,99	457	OR 354,97x6,99N70
367,67	6,99	458	OR 367,67x6,99N70
380,37	6,99	459	OR 380,37x6,99N70
393,07	6,99	460	OR 393,07x6,99N70
405,26	6,99	461	OR 405,26x6,99N70
417,96	6,99	462	OR 417,96x6,99N70
430,66	6,99	463	OR 430,66x6,99N70
443,36	6,99	464	OR 443,36x6,99N70
456,06	6,99	465	OR 456,06x6,99N70
468,76	6,99	466	OR 468,76x6,99N70
481,46	6,99	467	OR 481,46x6,99N70
494,16	6,99	468	OR 494,16x6,99N70
506,86	6,99	469	OR 506,86x6,99N70
532,26	6,99	470	OR 532,26x6,99N70

Standard sizes of series 900

di	s	AS 568A BS 1806	Part N°.
4,70	1,42	901	OR 4,7x1,42N70
6,07	1,63	902	OR 6,07x1,63N70
7,65	1,63	903	OR 7,65x1,63N70
8,92	1,83	904	OR 8,92x1,83N70
10,52	1,83	905	OR 10,52x1,83N70
11,89	1,98	906	OR 11,89x1,98N70
13,46	2,08	907	OR 13,46x2,08N70
16,36	2,21	908	OR 13,36x2,21N70
17,93	2,46	909	OR 17,93x2,46N70
19,18	2,46	910	OR 19,18x2,46N70

di	s	AS 568A BS 1806	Part N°.
21,92	2,95	911	OR 21,92x2,95N70
23,47	2,95	912	OR 23,47x2,95N70
25,04	2,95	913	OR 25,04x2,95N70
26,59	2,95	914	OR 26,59x2,95N70
29,74	2,95	916	OR 29,74x2,95N70
34,32	2,95	918	OR 34,32x2,95N70
37,47	3,00	920	OR 37,47x3,0N70
43,69	3,00	924	OR 43,69x3,0N70
53,09	3,00	928	OR 53,09x3,0N70
59,36	3,00	932	OR 59,36x3,0N70

O-Ring

BS 4518 SMS 1586

di	s	Part N°.
3,10	1,60	OR 3,1x1,6N70
3,30	2,40	OR 3,3x2,4N70
3,60	2,40	OR 3,6x2,4N70
4,10	1,60	OR 4,1x1,6N70
4,30	2,40	OR 4,3x2,4N70
4,60	2,40	OR 4,6x2,4N70
5,10	1,60	OR 5,1x1,6N70
5,30	2,40	OR 5,3x2,4N70
5,60	2,40	OR 5,6x2,4N70
6,10	1,60	OR 6,1x1,6N70
6,30	2,40	OR 6,3x2,4N70
6,60	2,40	OR 6,6x2,4N70
7,10	1,60	OR 07,1x1,6N70
7,30	2,40	OR 7,3x2,4N70
7,60	2,40	OR 7,6x2,4N70
8,10	1,60	OR 8,1x1,6N70
8,30	2,40	OR 8,3x2,4N70
8,60	2,40	OR 8,6x2,4N70
9,10	1,60	OR 9,1x1,6N70
9,30	2,40	OR 9,3x2,4N70
9,60	2,40	OR 9,6x2,4N70
10,10	1,60	OR 10,1x1,6-N70
10,30	2,40	OR 10,3x2,4N70
10,60	2,40	OR 10,6x2,4N70
11,10	1,60	OR 11,1x1,6N70
11,30	2,40	OR 11,3x2,4N70
11,60	2,40	OR 11,6x2,4N70
12,10	1,60	OR 12,1x1,6N70
12,30	2,40	OR 12,3x2,4N70
12,60	2,40	OR 0126-24-N70
13,10	1,60	OR 13,1x1,6N70
13,30	2,40	OR 13,3x2,4N70
13,60	2,40	OR 13,6x2,4N70
14,10	1,60	OR 14,1x1,6N70
14,30	2,40	OR 14,3x2,4N70
14,60	2,40	OR 14,6x2,4N70
15,10	1,60	OR 15,1x1,6N70
15,30	2,40	OR 15,3x2,4N70
15,60	2,40	OR 15,6x2,4N70
16,10	1,60	OR 16,1x1,6N70
16,30	2,40	OR 16,3x2,4N70
16,60	2,40	OR 16,6x2,4N70
17,10	1,60	OR 17,1x1,6N70
17,30	2,40	OR 17,3x2,4N70
17,60	2,40	OR 17,6x2,4N70
18,10	1,60	OR 18,1x1,6N70
18,30	2,40	OR 18,3x2,4N70
18,60	2,40	OR 18,6x2,4N70
19,10	1,60	OR 19,1x1,6N70
19,20	3,00	OR 19,2x3,0N70
19,30	2,40	OR 19,3x2,4N70
19,60	2,40	OR 29,6x2,4N70
20,10	1,60	OR 20,1x1,6N70
20,30	2,40	OR 20,3x2,4N70
20,60	2,40	OR 20,6x2,4N70
21,10	1,60	OR 21,1x1,6N70
21,30	2,40	OR 21,3x2,4N70
21,60	2,40	OR 21,6x2,4N70

di	s	Part N°.
22,20	3,00	OR 22,2x3,0N70
22,30	2,40	OR 22,3x2,4N70
23,30	2,40	OR 23,3x2,4N70
24,20	3,00	OR24,2x3,0N70
24,30	2,40	OR 24,3x2,4N70
24,60	2,40	OR 24,6x2,4N70
25,10	1,60	OR 25,1x1,6N70
25,30	2,40	OR 25,3x2,4N70
25,60	2,40	OR 25,6x2,4N70
26,20	3,00	OR 26,2x3,0N70
27,10	1,60	OR 27,1x1,6N70
27,30	2,40	OR 27,3x2,4N70
27,60	2,40	OR 27,6x2,4N70
29,10	1,60	OR 29,1x1,6N70
29,20	3,00	OR 29,2x3,0N70
29,60	2,40	OR 29,6x2,4N70
30,30	2,40	OR 30,3x2,4N70
32,10	1,60	OR 32,1x1,6N70
32,20	3,00	OR 32,2x3,0N70
33,30	2,40	OR 33,3x2,4N70
34,20	3,00	OR 34,2x3,0N70
35,10	1,60	OR 35,1x1,6N70
35,20	3,00	OR 35,2x3,0N70
36,20	3,00	OR 36,2x3,0N70
37,10	1,60	OR 37,1x1,6N70
39,20	3,00	OR 39,2x3,0N70
39,20	5,70	OR 39,2x5,7N70
42,20	3,00	OR 42,2x3,0N70
44,20	3,00	OR 44,2x3,0N70
44,20	5,70	OR 44,2x5,7N70
49,20	5,70	OR 49,2x5,7N70
49,50	3,00	OR 49,5x3,0N70
54,20	5,70	OR 54,2x5,7N70
54,50	3,00	OR 54,5x3,0N70
59,20	5,70	OR 59,2x5,7N70
59,50	3,00	OR 59,5x3,0N70
64,20	5,70	OR 64,2x5,7N70
64,50	3,00	OR 64,5x3,0N70
69,20	5,70	OR 69,2x5,7N70
69,50	3,00	OR 69,5x3,0N70
74,20	5,70	OR 74,2x5,7N70
74,50	3,00	OR 74,5x3,0N70
79,20	5,70	OR 79,2x5,7N70
79,50	3,00	OR 79,5x3,0N70
84,10	5,70	OR 84,1x5,7N70
84,50	3,00	OR 84,5x3,0N70
89,10	5,70	OR 89,1x5,7N70
89,50	3,00	OR 89,5x3,0N70
94,10	5,70	OR 94,1x5,7N70
94,50	3,00	OR 94,5x3,0N70
99,10	5,70	OR 99,1x5,7N70
99,50	3,00	OR 99,5x3,0N70
104,10	5,70	OR 104,1x5,7N70
104,50	3,00	OR 1045-30-N70
109,10	5,70	OR 1091-57-N70
109,50	3,00	OR 109,5x3,0N70
114,10	5,70	OR 114,1x5,7N70
114,50	3,00	OR 114,5x3,0N70

di	s	Part N°.
119,50	3,00	OR 119,5x3,0N70
124,30	5,70	OR 124,3x5,7N70
124,50	3,00	OR 124,5x3,0N70
129,30	5,70	OR 129,3x5,7N70
129,50	3,00	OR 129,5x3,0N70
134,30	5,70	OR 134,3x5,7N70
134,50	3,00	OR 134,5x3,0N70
139,50	3,00	OR 139,5x3,0N70
144,30	5,70	OR 144,3x5,7N70
144,50	3,00	OR 144,5x3,0N70
149,30	5,70	OR 149,3x5,7N70
154,30	5,70	OR 154,3x5,7N70
159,30	5,70	OR 159,3x5,7-N70
164,30	5,70	OR 164,3x5,7N70
169,30	5,70	OR 169,3x5,7N70
174,30	5,70	OR 174,3x5,7N70
179,30	5,70	OR 179,3x5,7N70
184,30	5,70	OR 184,3x5,7N70
189,30	5,70	OR 189,3x5,7N70
194,30	5,70	OR 194,3x5,7N70

di	s	Part N°.
199,30	5,70	OR 199,3x5,7N70
209,30	5,70	OR 209,3x5,7N70
219,30	5,70	OR 219,3x5,7N70
229,30	5,70	OR 229,3x5,7N70
239,30	5,70	OR 239,3x5,7N70
249,30	5,70	OR 249,3x5,7N70
259,30	5,70	OR 259,3x5,7N70
269,30	5,70	OR 269,3x5,7N70
279,30	5,70	OR 279,3x5,7N70
289,30	5,70	OR 289,3x5,7N70
299,30	5,70	OR 299,3x5,7N70
319,30	5,70	OR 319,3x5,7N70
329,30	5,70	OR 329,3x5,7N70
359,30	5,70	OR 359,3x5,7N70
379,30	5,70	OR 379,3x5,7N70
399,30	5,70	OR 399,3x5,7N70
419,30	5,70	OR 419,3x5,7N70
439,30	5,70	OR 439,3x5,7N70
444,30	5,70	OR 444,3x5,7N70
479,30	5,70	OR 479,3x5,7N70
499,30	5,70	OR 499,3x5,7N70

Metric sizes as per French Norm

di	s	Part-N°.
2,60	1,90	OR 2,6x1,9N70
3,40	1,90	OR 3,4x1,9N70
4,20	1,90	OR 4,2x1,9N70
4,90	1,90	OR 4,9x1,9N70
5,70	1,90	OR 5,7x1,9N70
6,40	1,90	OR 6,4x1,9N70
7,20	1,90	OR 7,2x1,9N70
8,00	1,90	OR 8,0x1,9N70
8,90	1,90	OR 8,9x1,9N70
8,90	2,70	OR 8,9x2,7N70
10,50	2,70	OR 10,5x2,7N70
12,10	2,70	OR 0121-27-N70
13,60	2,70	OR 13,6x2,7N70
15,10	2,70	OR 15,1x2,7N70
16,90	2,70	OR 16,9x2,7N70

di	s	Part-N°.
18,40	2,70	OR 18,4x2,7N70
18,30	3,60	OR 18,3x3,6N70
19,80	3,60	OR 19,8x3,6N70
21,30	3,60	OR 21,3x3,6N70
23,00	3,60	OR 23,3x3,6N70
24,60	3,60	OR 24,6x3,6N70
26,20	3,60	OR 26,2x3,6N70
27,80	3,60	OR 27,8x3,6N70
29,30	3,60	OR 29,3x3,6N70
30,80	3,60	OR 30,8x3,6N70
32,50	3,60	OR 32,5x3,6N70
34,10	3,60	OR 34,1x3,6N70
35,60	3,60	OR 35,6x3,6N70
37,20	3,60	OR 37,2x3,6N70

European and international metric sizes

di	s	Part-N°.
2,00	1,00	OR 2,0x1,0N70
2,00	1,10	OR 2,0x1,1N70
2,00	1,50	OR 2,0x1,5N70
2,50	1,00	OR 2,5x1,0N70
2,50	1,50	OR 2,5x1,5N70
2,60	1,20	OR 2,6x1,2N70
3,00	1,00	OR 3,0x1,0N70
3,00	1,20	OR 3,0x1,2N70
3,00	1,50	OR 3,0x1,5N70
3,00	2,00	OR 3,0x1,5N70
3,30	1,00	OR 3,3x1,0N70

di	s	Part-N°.
3,50	1,00	OR 3,5x1,0N70
3,50	1,20	OR 3,5x1,2N70
3,50	1,50	OR 3,5x1,5N70
3,80	1,25	OR 3,8x1,25N70
3,80	1,30	OR 3,8x1,3N70
3,80	2,10	OR 3,8x2,1N70
4,00	1,00	OR 4,0x1,0N70
4,00	1,20	OR 4,0x1,2N70
4,00	1,50	OR 4,0x1,5N70
4,00	2,00	OR 4,0x2,0N70
4,00	3,00	OR 4,0x3,0N70

O-Ring

di	s	Part N°.
4,50	1,50	OR 4,5x1,5N70
4,50	2,50	OR 4,5x2,5N70
4,60	2,00	OR 4,6x2,0N70
4,90	3,20	OR 4,9x3,2N70
5,00	1,00	OR 5,0x1,0N70
5,00	1,20	OR 5,0x1,2N70
5,00	1,50	OR 5,0x1,5N70
5,00	2,00	OR 5,0x2,0N70
5,00	2,50	OR 5,0x2,5N70
5,00	3,00	OR 5,0x3,0N70
5,00	5,00	OR 5,0x5,0N70
6,00	1,00	OR 6,0x1,0N70
6,00	1,40	OR 6,0x1,4N70
6,00	1,50	OR 6,0x1,5N70
6,00	2,00	OR 6,0x2,0N70
6,00	2,20	OR 6,0x2,2N70
6,00	2,50	OR 6,0x2,5N70
6,00	3,00	OR 6,0x3,0N70
6,50	1,50	OR 6,5x1,5N70
6,50	3,00	OR 6,5x3,0N70
7,00	1,50	OR 7,0x1,5N70
7,00	2,00	OR 7,0x2,0N70
7,00	2,50	OR 7,0x2,5N70
7,00	4,00	OR 7,0x4,0N70
7,50	1,50	OR 7,5x1,5N70
8,00	1,00	OR 8,0x1,0N70
8,00	1,50	OR 8,0x1,5N70
8,00	2,00	OR 8,0x2,0N70
8,00	2,50	OR 8,0x2,5N70
8,00	3,00	OR 8,0x3,0N70
8,00	3,50	OR 8,0x3,5N70
8,00	4,00	OR 8,0x4,0N70
8,00	5,00	OR 8,0x5,0N70
8,50	1,50	OR 8,5x1,5N70
8,50	2,50	OR 8,5x2,5N70
8,90	1,25	OR 8,9x1,25N70
9,00	1,00	OR 9,0x1,0N70
9,00	1,50	OR 9,0x1,5N70
9,00	1,80	OR 9,0x1,8N70
9,00	2,00	OR 9,0x2,0N70
9,00	2,50	OR 9,0x2,5N70
9,00	3,00	OR 9,0x3,0N70
9,50	1,00	OR 9,5x1,0N70
9,50	2,00	OR 9,5x2,0N70
9,50	2,50	OR 9,5x2,5N70
9,50	2,90	OR 9,5x2,9N70
9,70	1,30	OR 9,7x1,3N70
10,00	1,00	OR 10,0x1,0N70
10,00	1,30	OR 10,0x1,3N70
10,00	1,50	OR 10,0x1,5N70
10,00	2,00	OR 10,0x2,0N70
10,00	2,20	OR 10,0x2,2N70
10,00	2,50	OR 10,0x2,5N70
10,00	3,00	OR 10,0x3,0N70
10,00	3,50	OR 10,0x3,5N70
10,00	5,00	OR 10,0x5,0N70
10,50	1,50	OR 10,5x1,5N70
10,50	2,00	OR 10,5x2,0N70
11,00	1,00	OR 11,0x1,0N70
11,00	1,30	OR 11,0x1,3N70
11,00	1,50	OR 11,0x1,5N70

di	s	Part N°.
11,00	2,00	OR 11,0x2,0N70
11,00	2,50	OR 11,0x2,5N70
11,00	3,00	OR 11,0x3,0N70
11,00	3,50	OR 11,0x3,5N70
11,00	4,00	OR 11,0x4,0N70
11,50	3,00	OR 11,5x3,0N70
12,00	1,00	OR 12,0x1,0N70
12,00	1,50	OR 12,0x1,5N70
12,00	1,70	OR 12,0x1,7N70
12,00	2,00	OR 12,0x2,0N70
12,00	2,50	OR 12,0x2,5N70
12,00	3,00	OR 12,0x3,0N70
12,00	3,50	OR 12,0x3,5N70
12,00	5,00	OR 12,0x5,0N70
12,50	1,50	OR 12,5x1,5N70
12,50	2,50	OR 125-25-N70
12,50	2,00	OR 12,5x2,0N70
13,00	1,00	OR 13,0x1,0N70
13,00	1,50	OR 13,0x1,5N70
13,00	2,00	OR 13,0x2,0N70
13,00	2,50	OR 13,0x2,5N70
13,00	3,00	OR 13,0x3,0N70
13,00	3,50	OR 13,0x3,5N70
14,00	1,00	OR 14,0x1,0N70
14,00	1,50	OR 14,0x1,5N70
14,00	2,00	OR 14,0x2,0N70
14,00	2,50	OR 14,0x2,5N70
14,00	3,00	OR 14,0x3,0N70
14,00	3,50	OR 14,0x3,5N70
14,00	4,00	OR 14,0x4,0N70
15,00	1,00	OR 15,0x1,0N70
15,00	1,50	OR 15,0x1,5N70
15,00	2,00	OR 15,0x2,0N70
15,00	3,00	OR 15,0x3,0N70
15,00	3,50	OR 15,0x3,5N70
15,00	6,00	OR 15,0x6,0N70
15,40	1,30	OR 15,4x1,3N70
16,00	1,00	OR 16,0x1,0N70
16,00	1,25	OR 16,0x1,25N70
16,00	2,00	OR 16,0x2,0N70
16,00	2,50	OR 16,0x2,5N70
16,00	3,00	OR 16,0x3,0N70
16,00	4,00	OR 16,0x4,0N70
16,00	5,00	OR 16,0x5,0N70
17,00	1,00	OR 17,0x1,0N70
17,00	1,50	OR 17,0x1,5N70
17,00	2,00	OR 17,0x2,0N70
17,00	2,50	OR 17,0x2,5N70
17,00	3,00	OR 17,0x3,0N70
17,00	4,00	OR 17,0x4,0N70
17,50	2,00	OR 17,5x2,0N70
18,00	1,50	OR 18,0x1,5N70
18,00	2,00	OR 18,0x2,0N70
18,00	2,50	OR 18,0x2,5N70
18,00	3,00	OR 18,0x3,0N70
18,00	3,50	OR 18,0x3,5N70
18,00	4,00	OR 18,0x4,0N70
18,00	5,00	OR 18,0x5,0N70
18,00	6,00	OR 18,0x6,0N70
19,00	1,50	OR 19,0x1,5N70
19,00	2,00	OR 19,0x2,0N70

O-Ring

di	s	Part N°.
19,00	2,50	OR 19,0x2,5N70
19,00	3,00	OR 19,0x3,0N70
19,00	3,50	OR 19,0x3,5N70
19,00	5,00	OR 19,0x5,0N70
19,50	1,50	OR 19,5x1,5N70
19,50	1,78	OR 19,5x1,78N70
20,00	1,00	OR 20,0x1,0N70
20,00	1,30	OR 20,0x1,3N70
20,00	1,50	OR 20,0x1,5N70
20,00	2,00	OR 20,0x2,0N70
20,00	2,50	OR 20,0x2,5N70
20,00	3,00	OR 20,0x3,0N70
20,00	3,50	OR 20,0x3,5N70
20,00	4,00	OR 20,0x4,0N70
20,00	5,00	OR 20,0x5,0N70
20,00	6,00	OR 20,0x6,0N70
20,00	8,00	OR 20,0x8,0N70
21,00	1,50	OR 21,0x1,5N70
21,00	2,00	OR 21,0x2,0N70
21,00	3,00	OR 21,0x3,0N70
21,00	3,50	OR 21,0x3,5N70
21,00	4,00	OR 21,0x4,0N70
21,00	4,50	OR 21,0x4,5N70
21,00	6,00	OR 21,0x6,0N70
22,00	1,00	OR 22,0x1,0N70
22,00	1,50	OR 22,0x1,5N70
22,00	2,00	OR 22,0x2,0N70
22,00	2,50	OR 22,0x2,5N70
22,00	3,00	OR 22,0x3,0N70
22,00	4,00	OR 22,0x4,0N70
22,00	5,00	OR 22,0x5,0N70
22,00	6,00	OR 22,0x6,0N70
22,50	2,00	OR 22,5x2,0N70
22,50	3,00	OR 22,5x3,0N70
23,00	1,50	OR 23,0x1,5N70
23,00	2,50	OR 23,0x2,5N70
23,00	3,00	OR 23,0x3,0N70
23,00	3,50	OR 23,0x3,5N70
23,00	5,00	OR 23,0x5,0N70
23,50	3,00	OR 23,5x3,0N70
24,00	1,50	OR 24,0x1,5N70
24,00	2,00	OR 24,0x2,0N70
24,00	3,00	OR 24,0x3,0N70
24,00	3,50	OR 24,0x3,5N70
24,00	4,00	OR 24,0x4,0N70
24,00	5,00	OR 24,0x5,0N70
24,50	4,50	OR 24,5x4,5N70
25,00	1,00	OR 25,0x1,0N70
25,00	1,50	OR 25,0x1,5N70
25,00	2,00	OR 25,0x2,0N70
25,00	2,50	OR 25,0x2,5N70
25,00	3,00	OR 25,0x3,0N70
25,00	3,50	OR 25,0x3,5N70
25,00	5,00	OR 25,0x5,0N70
25,00	6,00	OR 25,0x6,0N70
25,00	6,50	OR 25,0x6,5N70
26,00	1,20	OR 26,0x1,2N70
26,00	2,00	OR 26,0x2,0N70
26,00	2,50	OR 26,0x2,5N70
26,00	5,00	OR 26,0x5,0N70
27,00	1,50	OR 27,0x1,5N70

di	s	Part N°.
27,00	2,00	OR 27,0x2,0N70
27,00	2,50	OR 27,0x2,5N70
27,00	3,00	OR 27,0x3,0N70
27,00	4,00	OR 27,0x4,0N70
27,00	5,00	OR 27,0x5,0N70
27,00	6,00	OR 27,0x6,0N70
27,50	4,50	OR 27,5x4,5N70
28,00	2,00	OR 28,0x2,0N70
28,00	3,00	OR 28,0x3,0N70
28,00	4,00	OR 28,0x4,0N70
28,00	5,00	OR 28,0x5,0N70
28,00	8,00	OR 28,0x8,0N70
29,00	2,00	OR 29,0x2,0N70
29,00	3,00	OR 29,0x3,0N70
29,00	3,50	OR 29,0x3,5N70
29,50	1,50	OR 29,5x1,5N70
29,50	2,30	OR 29,5x2,3N70
30,00	2,00	OR 30,0x2,0N70
30,00	2,50	OR 30,0x2,5N70
30,00	3,00	OR 30,0x3,0N70
30,00	4,00	OR 30,0x4,0N70
30,00	6,00	OR 30,0x6,0N70
30,00	8,00	OR 30,0x8,0N70
31,00	2,50	OR 31,0x2,5N70
31,00	3,00	OR 31,0x3,0N70
31,00	4,00	OR 31,0x4,0N70
31,00	4,50	OR 31x4,5N70
31,30	2,00	OR 31,3x2,0N70
31,50	3,00	OR 31,5x3,0N70
31,80	1,50	OR 31,8x1,5N70
32,00	1,00	OR 32,0x1,0N70
32,00	2,00	OR 32,0x2,0N70
32,00	2,50	OR 32,0x2,5N70
32,00	3,00	OR 32,0x3,0N70
32,00	4,00	OR 32,0x4,0N70
32,00	4,50	OR 32,0x4,5N70
32,00	5,00	OR 32,0x5,0N70
32,00	7,00	OR 32,0x7,0N70
32,70	1,30	OR 32,7x1,3N70
33,00	2,00	OR 33,0x2,0N70
33,00	2,50	OR 33,0x2,5N70
33,00	3,00	OR 33,0x3,0N70
33,00	3,50	OR 33,0x3,5N70
33,00	5,00	OR 33,0x5,0N70
33,60	1,78	OR 33,6x1,78N70
34,00	2,00	OR 34,0x2,0N70
34,00	2,50	OR 34,0x2,5N70
34,00	3,00	OR 34,0x3,0N70
34,00	3,50	OR 34,0x3,5N70
34,00	4,00	OR 34,0x4,0N70
34,00	5,00	OR 34,0x5,0N70
35,00	1,20	OR 35,0x1,2N70
35,00	2,00	OR 35,2,0N70
35,00	3,00	OR 35,0x3,0N70
35,00	3,20	OR 35,0x3,2N70
35,00	3,50	OR 35,0x3,5N70
35,00	4,00	OR 35,0x4,0N70
35,00	5,00	OR 35,0x5,0N70
35,00	6,00	OR 35,0x6,0N70
35,20	3,00	OR 35,2x3,0N70
35,20	5,70	OR 35,2x5,7N70

O-Ring

di	s	Part N°.
36,00	1,50	OR 36,0x1,5N70
36,00	2,00	OR 36,0x2,0N70
36,00	2,50	OR 36,0x2,5N70
36,00	3,00	OR 36,0x3,0N70
36,00	4,00	OR 36,0x4,0N70
36,00	5,00	OR 36,0x5,0N70
36,40	2,00	OR 36,4x2,0N70
37,00	4,00	OR 67,0x4,0N70
38,00	2,00	OR 38,0x2,0N70
38,00	2,50	OR 38,0x2,5N70
38,00	3,00	OR 38,0x3,0N70
38,00	4,00	OR 38,0x4,0N70
38,00	4,50	OR 38,0x4,5N70
38,00	5,00	OR 38,0x5,0N70
38,90	1,45	OR 38,9x1,45N70
39,00	2,00	OR 39,0x2,0N70
39,00	2,50	OR 39,0x2,5N70
39,00	3,00	OR 39,0x3,0N70
40,00	1,00	OR 40,0x1,0N70
40,00	2,00	OR 40,0x2,0N70
40,00	2,50	OR 40,0x2,5N70
40,00	3,00	OR 40,0x3,0N70
40,00	3,50	OR 40,0x3,5N70
40,00	4,00	OR 40,0x4,0N70
40,00	4,50	OR 40,0x4,5N70
40,00	5,00	OR 40,0x5,0N70
41,00	1,50	OR 41,0x1,5N70
41,00	2,00	OR 41,0x2,0N70
41,00	2,50	OR 41,0x2,5N70
41,00	3,00	OR 41,0x3,0N70
41,20	5,70	OR 41,2x5,7N70
41,60	1,78	OR 41,6x1,78N70
42,00	1,50	OR 42,0x1,5N70
42,00	2,00	OR 42,0x2,0N70
42,00	2,50	OR 42,0x2,5N70
42,00	3,00	OR 42,0x3,0N70
42,00	3,50	OR 42,0x3,5N70
42,00	4,00	OR 42,0x4,0N70
42,00	5,00	OR 42,0x5,0N70
42,20	3,00	OR 42,2x3,0N70
43,00	1,50	OR 43,0x3,0N70
43,00	3,00	OR 43,0x3,0N70
43,00	4,00	OR 43,0x4,0N70
43,00	5,00	OR 43,0x5,0N70
44,00	2,00	OR 44,0x2,0N70
44,00	3,00	OR 44,0x3,0N70
44,00	4,00	OR 44,0x4,0N70
44,50	3,00	OR 44,5x3,0N70
45,00	1,50	OR 45,0x1,5N70
45,00	2,00	OR 45,0x2,0N70
45,00	2,50	OR 45,0x2,5N70
45,00	3,00	OR 45,0x3,0N70
45,00	3,50	OR 45,0x3,5N70
45,00	4,00	OR 45,0x4,0N70
45,00	4,50	OR 45,0x4,5N70
45,00	5,00	OR 45,0x5,0N70
45,00	5,50	OR 45,0x5,5N70
45,20	5,70	OR 45,2x5,7N70
45,70	1,50	OR 45,7x1,5N70
46,00	2,00	OR 46,0x2,0N70
46,00	3,00	OR 46,0x3,0N70

di	s	Part N°.
46,00	4,00	OR 46,0x4,0N70
47,00	1,60	OR 47,0x1,6N70
47,00	2,00	OR 47,0x2,0N70
47,00	3,00	OR 47,0x3,0N70
47,00	4,00	OR 47,0x4,0N70
48,00	1,50	OR 48,0x1,5N70
48,00	2,00	OR 48,0x2,0N70
48,00	3,00	OR 48,0x3,0N70
48,00	4,00	OR 48,0x4,0N70
48,00	5,00	OR 48,0x5,0N70
48,00	6,00	OR 48,0x6,0N70
49,00	1,50	OR 49,0x1,5N70
49,00	3,00	OR 49,0x3,0N70
49,00	4,00	OR 49,0x4,0N70
50,00	1,00	OR 50,0x1,0N70
50,00	2,00	OR 50,0x2,0N70
50,00	3,00	OR 50,0x3,0N70
50,00	3,50	OR 50,0x3,5N70
50,00	4,00	OR 50,0x4,0N70
50,00	5,00	OR 50,0x5,0N70
50,00	6,00	OR 50,0x6,0N70
51,00	3,00	OR 51,0x3,0N70
51,20	5,70	OR 51,2x5,7N70
52,00	1,50	OR 52,0x1,5N70
52,00	2,00	OR 52,0x2,0N70
52,00	3,00	OR 52,0x3,0N70
52,00	3,50	OR 52,0x3,5N70
52,00	4,00	OR 52,0x4,0N70
52,00	6,00	OR 52,0x6,0N70
52,20	5,70	OR 52,2x5,7N70
53,00	1,50	OR 53,0x1,5N70
53,00	2,00	OR 53,0x2,0N70
53,00	2,50	OR 53,0x2,5N70
53,00	4,50	OR 53,0x4,5N70
54,00	2,00	OR 54,0x2,0N70
54,00	2,50	OR 54,0x2,5N70
54,00	3,00	OR 54,0x3,0N70
54,00	4,00	OR 54,0x4,0N70
54,00	7,00	OR 54,0x7,0N70
55,00	1,50	OR 55,0x1,5N70
55,00	2,00	OR 55,0x2,0N70
55,00	2,50	OR 55,0x2,5N70
55,00	3,00	OR 55,0x3,0N70
55,00	3,50	OR 55,0x3,5N70
55,00	4,00	OR 55,0x4,0N70
55,00	5,00	OR 55,0x4,0N70
55,20	5,70	OR 55,2x5,7N70
56,00	2,00	OR 56,0x2,0N70
56,00	3,00	OR 56,0x3,0N70
57,00	1,50	OR 57,0x1,5N70
57,00	2,00	OR 57,0x2,0N70
57,00	2,50	OR 57,0x2,5N70
57,00	3,00	OR 57,0x3,0N70
57,00	4,00	OR 57,0x4,0N70
57,00	5,00	OR 57,0x5,0N70
57,20	5,70	OR 57,2x5,7N70
58,00	2,50	OR 58,0x2,5N70
58,00	3,00	OR 58,0x3,0N70
58,00	3,50	OR 58,0x3,5N70
58,00	4,00	OR 58,0x4,0N70
58,00	8,00	OR 58,0x8,0N70

O-Ring

di	s	Part N°.
59,00	1,50	OR 59,0x1,5N70
59,00	3,00	OR 59,0x3,0N70
60,00	1,50	OR 60,0x1,5N70
60,00	2,50	OR 60,0x2,5N70
60,00	3,00	OR 60,0x3,0N70
60,00	3,50	OR 60,0x3,5-N70
60,00	4,00	OR 60,0x4,0N70
60,00	5,00	OR 60,0x5,0N70
61,00	6,00	OR 0610-60-N70
61,20	5,70	OR 61,2x5,7N70
61,50	7,50	OR 61,5x7,5N70
61,60	1,00	OR61,6x1,0N70
62,00	1,50	OR 62,0x1,5N70
62,00	2,00	OR 62,0x2,0N70
62,00	2,50	OR 62,0x2,5N70
62,00	3,00	OR 62,0x3,0N70
62,00	4,00	OR 62,0x4,0N70
62,00	4,50	OR 62,0x4,5N70
62,00	5,00	OR62,0x5,0N70
62,00	8,00	OR 62,0x8,0N70
63,00	2,00	OR 63,0x2,0N70
63,00	2,50	OR 63,0x2,5N70
63,00	4,00	OR 63,0x4,0N70
63,00	6,00	OR 63,0x6,0N70
64,00	2,00	OR 64,0x2,0N70
64,00	3,00	OR 64,0x3,0N70
64,00	4,00	OR 64,0x4,0N70
65,00	1,50	OR 65,0x1,5N70
65,00	1,65	OR 65,0x1,65N70
65,00	2,00	OR 65,0x2,0N70
65,00	2,50	OR65,0x2,5N70
65,00	3,00	OR 65,0x3,0N70
65,00	4,00	OR 65,0x4,0N70
65,00	5,00	OR 65,0x5,0N70
65,00	7,50	OR 65,0x7,5N70
66,00	2,00	OR 66,0x2,0N70
66,00	3,00	OR 66,0x3,0N70
67,00	2,00	OR 67,0x2,0N70
67,00	2,50	OR 67,0x2,5N70
67,00	3,00	OR 67,0x3,0N70
67,00	4,00	OR 67,0x4,0N70
67,00	8,00	OR 67,0x8,0N70
67,20	5,70	OR 67,2x5,7N70
68,00	2,00	OR 68,0x2,0N70
68,00	2,50	OR 68,0x2,5N70
68,00	3,00	OR 68,0x3,0N70
68,00	4,00	OR 68,0x4,0N70
68,00	5,00	OR 68,0x5,0N70
68,00	6,00	OR 68,0x6,0N70
68,00	7,00	OR 68,0x7,0N70
69,00	3,00	OR 69,0x3,0N70
70,00	1,78	OR 70,0x1,7N70
70,00	2,00	OR 70,0x2,0N70
70,00	2,50	OR 70,0x2,5N70
70,00	3,50	OR 70,0x3,5-N70
70,00	4,00	OR 70,0x4,0N70
70,00	5,00	OR 70,0x5,0N70
70,00	6,00	OR 70,0x6,0N70
70,00	7,00	OR 40,0x7,0N70
71,00	3,00	OR 71,0x3,0N70
71,50	1,50	OR 71,5x1,5N70

di	s	Part N°.
72,00	2,50	OR 72,0x2,5N70
72,00	3,00	OR 72,0x3,0N70
72,00	5,00	OR 72,0x5,0N70
72,20	5,70	OR 72,2x5,7N70
73,00	2,50	OR 73,0x2,5N70
73,00	3,00	OR 73,0x3,0N70
73,00	4,00	OR 73,0x4,0N70
73,00	5,00	OR 73,0x5,0N70
74,00	2,00	OR 74,0x2,0N70
74,00	3,00	OR 74,0x3,0N70
74,00	4,00	OR 74,0x4,0N70
75,00	2,00	OR 75,0x2,0N70
75,00	2,50	OR 75,0x2,5N70
75,00	3,00	OR 75,0x3,0N70
75,00	3,50	OR 75,0x3,5N70
75,00	4,00	OR 75,0x4,0N70
75,00	5,00	OR 75,0x5,0N70
75,00	6,00	OR 75,0x6,0N70
75,00	8,00	OR 75,0x8,0N70
76,00	2,00	OR 76,0x2,0N70
76,00	2,50	OR 76,0x2,5N70
76,00	3,00	OR 76,0x3,0N70
76,00	4,00	OR 76,0x4,0N70
77,20	5,70	OR 77,2x5,7N70
78,00	1,20	OR 78,0x1,2N70
78,00	2,00	OR 78,0x2,0N70
78,00	2,50	OR 78,0x2,5N70
78,00	3,00	OR 78,0x3,0N70
78,00	4,00	OR 78,0x4,0N70
78,00	4,30	OR 78,0x4,3N70
78,00	5,00	OR 78,0x5,0N70
79,00	3,00	OR 79,0x3,0N70
79,00	5,00	OR 79,0x5,0N70
79,40	6,10	OR 79,4x6,1N70
80,00	2,00	OR 80,0x2,0N70
80,00	2,50	OR 80,0x2,5N70
80,00	3,00	OR 80,0x3,0N70
80,00	3,50	OR 0800-35-N70
80,00	4,00	OR 80,0x4,0N70
80,00	4,30	OR 80,0x4,3N70
80,00	5,00	OR 80,0x5,0N70
81,00	1,10	OR 81,0x1,1N70
82,00	3,00	OR 82,0x3,0N70
82,00	5,00	OR 82,0x5,0N70
82,50	2,00	OR 82,5x2,0N70
83,00	3,00	OR 83,0x3,0N70
84,00	3,00	OR 84,0x3,0N70
84,00	4,00	OR 84,0x4,0N70
85,00	2,00	OR 85,0x2,0N70
85,00	2,50	OR 85,0x2,5N70
85,00	3,00	OR 85,0x3,0N70
85,00	5,00	OR 85,0x5,0N70
86,00	2,50	OR 86,0x2,5N70
86,00	3,00	OR 86,0x3,0N70
86,00	4,00	OR 86,0x4,0N70
87,00	2,50	OR 87,0x2,5N70
87,00	4,00	OR 87,0x4,0N70
87,20	5,70	OR 87,2x5,7N70
88,00	2,00	OR 88,0x2,0N70
88,00	3,00	OR 88,0x3,0N70
88,00	4,00	OR 88,0x4,0N70

di	s	Part N°.
88,00	4,50	OR 88,0x4,5N70
88,00	5,00	OR 88,0x5,0N70
89,50	2,50	OR 89,5x2,5N70
90,00	1,50	OR 90,0x1,5N70
90,00	2,50	OR 90,0x2,5N70
90,00	3,00	OR 90,0x3,0N70
90,00	3,50	OR 90,0x3,5N70
90,00	4,00	OR 90,0x4,0N70
90,00	5,00	OR 90,0x5,0N70
91,00	3,00	OR 91,0x3,0N70
91,00	4,00	OR 91,0x4,0N70
92,00	2,50	OR 92,0x2,5N70
92,00	3,00	OR 92,0x3,0N70
92,00	3,50	OR 92,0x3,5N70
92,00	4,00	OR 92,0x4,0N70
92,00	5,00	OR 92,0x5,0N70
92,50	2,00	OR 92,5x2,0N70
93,00	3,00	OR 93,0x3,0N70
93,00	4,00	OR 93,0x4,0N70
94,00	1,00	OR 94,0x1,0N70
94,00	2,00	OR 94,0x2,0N70
94,00	2,50	OR 94,0x2,5N70
94,00	3,00	OR 94,3x3,0N70
94,00	4,00	OR 94,0x4,0N70
95,00	1,50	OR 95,0x1,5N70
95,00	2,00	OR 95,0x2,0N70
95,00	2,50	OR 95,0x2,5N70
95,00	3,00	OR 95,0x3,0N70
95,00	4,50	OR 95,0x4,5N70
95,00	5,00	OR 95,0x5,0N70
96,00	3,00	OR 96,0x3,0N70
96,00	4,00	OR 96,0x4,0N70
96,00	6,00	OR 96,0x6,0N70
97,00	1,60	OR 97,0x1,6N70
97,00	5,00	OR 97,0x5,0N70
97,50	3,00	OR 97,5x3,0N70
98,00	3,00	OR 98,0x3,0N70
98,00	4,00	OR 98,0x4,0N70
98,00	5,00	OR 98,0x5,0N70
99,00	3,00	OR 99,0x3,0N70
100,00	1,50	OR 100,0x1,5N70
100,00	2,00	OR 100,0x2,0N70
100,00	3,00	OR 100,0x3,0N70
100,00	3,50	OR 100,0x3,5N70
100,00	4,00	OR 100,0x4,0N70
100,00	5,00	OR 100,0x5,0N70
100,00	6,00	OR 100,0x6,0N70
100,00	7,00	OR 100,0x7,0N70
100,00	8,00	OR 100,0x8,0N70
100,50	4,50	OR 100,5x4,5N70
101,50	3,00	OR 101,5x3,0N70
102,00	3,00	OR 102,0x3,0N70
102,00	4,00	OR 102,0x4,0N70
102,00	5,00	OR 102,0x5,0N70
103,00	2,00	OR 103,0x2,0N70
103,00	6,00	OR 103,0x6,0N70
103,90	2,18	OR 103,9x2,18N70
104,00	2,50	OR 104,0x2,5N70
104,00	4,00	OR 104,0x4,0N70
104,20	5,70	OR 104,2x5,7N70
105,00	3,00	OR 105,0x3,0N70

di	s	Part N°.
105,00	4,00	OR 105,0x4,0N70
105,00	5,00	OR 105,0x5,0N70
106,00	2,00	OR 106,0x2,0N70
106,00	3,00	OR 106,0x3,0N70
107,00	2,50	OR 107,0x2,5N70
107,00	5,00	OR 107,0x5,0N70
108,00	4,00	OR 108,0x4,0N70
108,00	5,00	OR 108,0x5,0N70
108,00	7,00	OR 108,0x7,0N70
109,00	2,00	OR 109,0x2,0N70
109,50	2,00	OR 109,5x2,0N70
110,00	1,00	OR 110,0x1,0N70
110,00	2,00	OR 110,0x2,0N70
110,00	3,00	OR 110,0x3,0N70
110,00	4,00	OR 110,0x4,0N70
110,00	5,00	OR 110,0x5,0N70
110,00	6,00	OR 110,0x6,0N70
110,00	7,00	OR 110,0x7,0N70
110,00	8,00	OR 110,0x8,0N70
112,00	2,50	OR 112,0x2,5N70
112,00	3,00	OR 112,0x3,0N70
112,00	4,00	OR 112,0x4,0N70
114,00	2,00	OR 114,0x2,0N70
114,00	3,00	OR 114,0x3,0N70
114,00	4,00	OR 114,0x4,0N70
114,00	6,00	OR 114,0x6,0N70
114,20	5,70	OR 114,2x5,7N70
115,00	2,00	OR 115,0x2,0N70
115,00	2,30	OR 115,0x2,3N70
115,00	2,50	OR 115,0x2,5N70
115,00	3,00	OR 115,0x3,0N70
115,00	4,00	OR 115,0x4,0N70
115,00	4,50	OR 115,0x4,5N70
115,00	5,00	OR 115,0x5,0N70
115,00	6,00	OR 115,0x6,0N70
115,00	9,00	OR 115,0x9,0N70
118,00	2,50	OR 118,0x2,5N70
118,00	3,00	OR 118,0x3,0N70
118,00	4,00	OR 118,0x4,0N70
120,00	2,00	OR 120,0x2,0N70
120,00	2,20	OR 120,0x2,2N70
120,00	3,00	OR 120,0x3,0N70
120,00	4,00	OR 120,0x4,0N70
120,00	5,00	OR 120,0x5,0N70
120,00	7,00	OR 120,0x7,0N70
122,00	4,00	OR 122,0x4,0N70
123,00	2,00	OR 123,0x2,0N70
123,00	6,00	OR 123,0x6,0N70
124,00	4,00	OR 124,0x4,0N70
125,00	2,00	OR 125,0x2,0N70
125,00	2,50	OR 125,0x2,5N70
125,00	3,00	OR 125,0x3,0N70
125,00	4,00	OR 125,0x4,0N70
125,00	5,00	OR 125,0x5,0N70
126,00	3,00	OR 126,0x3,0N70
126,00	4,00	OR 126,0x4,0N70
126,50	3,00	OR 126,5x3,0N70
128,00	3,00	OR 128,0x3,0N70
128,00	4,00	OR 128,0x4,0N70
129,00	4,00	OR 129,0x4,0N70
130,00	2,50	OR 130,0x2,5N70

di	s	Part N°.
130,00	4,00	OR 130,0x4,0N70
130,00	5,00	OR 130,0x5,0N70
132,00	3,00	OR 132,0x3,0N70
132,00	5,00	OR 132,0x5,0N70
134,00	3,00	OR 134,0x3,0N70
134,00	4,00	OR 134,0x4,0N70
135,00	1,50	OR 135,0x1,5N70
135,00	2,50	OR 135,0x2,5N70
135,00	3,00	OR 135,0x3,0N70
135,00	4,00	OR 135,0x4,0N70
135,00	5,00	OR 135,0x5,0N70
135,00	6,00	OR 135,0x6,0N70
137,00	3,00	OR 137,0x3,0N70
138,00	2,10	OR 138,0x2,1N70
138,00	4,00	OR 138,0x4,0N70
139,00	4,20	OR 139,0x4,2N70
140,00	2,00	OR 140,0x2,0N70
140,00	3,00	OR 140,0x3,0N70
140,00	4,00	OR 140,0x4,0N70
140,00	5,00	OR 140,0x5,0N70
140,00	8,00	OR 140,0x8,0N70
142,00	3,00	OR 142,0x3,0N70
142,00	4,00	OR 142,0x4,0N70
142,00	6,00	OR 142,0x6,0N70
143,00	2,00	OR 143,0x2,0N70
144,00	3,00	OR 144,0x3,0N70
144,00	4,00	OR 144,0x4,0N70
145,00	2,50	OR 145,0x2,5N70
145,00	5,00	OR 145,0x5,0N70
146,00	3,00	OR 146,0x3,0N70
146,00	4,00	OR 146,0x4,0N70
148,00	2,50	OR 148,0x2,5N70
148,00	3,00	OR 148,0x3,0N70
148,00	5,00	OR 148,0x5,0N70
150,00	2,00	OR 150,0x2,0N70
150,00	3,00	OR 150,0x3,0N70
150,00	4,00	OR 150,0x4,0N70
150,00	4,50	OR 150,0x4,5N70
150,00	5,00	OR 150,0x5,0N70
150,00	6,00	OR 150,0x6,0N70
152,50	2,50	OR 152,5x2,5N70
154,00	6,00	OR 154,0x6,0N70
154,10	8,40	OR 154,1x8,4N70
154,50	3,00	OR 154,5x3,0N70
155,00	3,00	OR 155,0x3,0N70
155,00	4,00	OR 155,0x4,0N70
155,00	5,00	OR 155,0x5,0N70
156,00	2,50	OR 156,0x2,5N70
156,00	3,00	OR 156,0x3,0N70
157,00	6,55	OR 157,0x6,5N70
158,00	4,00	OR 158,0x4,0N70
158,00	8,00	OR 158,0x8,0N70
159,50	3,00	OR 159,5x3,0N70
160,00	2,00	OR 160,0x2,0N70
160,00	2,50	OR 160,0x2,5N70
160,00	3,00	OR 160,0x3,0N70
160,00	4,00	OR 160,0x4,0N70
160,00	5,00	OR 160,0x5,0N70
160,00	6,00	OR 160,0x6,0N70
162,00	3,00	OR 162,0x3,0N70
162,00	4,00	OR 162,0x4,0N70

di	s	Part N°.
162,00	8,00	OR 162,0x8,0N70
164,00	3,00	OR 164,0x3,0N70
164,50	3,00	OR 164,5x3,0N70
165,00	3,00	OR 165,0x3,0N70
165,00	4,00	OR 165,0x4,0N70
165,00	5,00	OR 165,0x5,0N70
165,00	6,00	OR 165,0x6,0N70
168,00	5,70	OR 168,0x5,7N70
169,50	3,00	OR 169,5x3,0N70
170,00	3,00	OR 170,0x3,0N70
170,00	3,50	OR 170,0x3,5N70
170,00	4,00	OR 170,0x4,0N70
172,00	3,00	OR 172,0x3,0N70
172,00	4,00	OR 172,0x4,0N70
172,00	6,00	OR 172,0x6,0N70
174,00	3,00	OR 174,0x3,0N70
174,00	3,20	OR 174,0x3,2N70
174,50	3,00	OR 174,5x3,0N70
175,00	4,00	OR 175,0x4,0N70
175,00	5,00	OR 175,0x5,0N70
175,00	6,00	OR 175,0x6,0N70
177,00	3,00	OR 177,0x3,0N70
177,00	4,00	OR 177,0x4,0N70
179,00	3,00	OR 179,0x3,0N70
179,50	3,00	OR 179,5x3,0N70
180,00	3,00	OR 180,0x3,0N70
180,00	4,00	OR 180,0x4,0N70
180,00	5,00	OR 180,0x5,0N70
180,00	6,00	OR 180,0x6,0N70
182,00	3,00	OR 182,0x3,0N70
185,00	3,00	OR 185,0x3,0N70
185,00	4,00	OR 185,0x4,0N70
185,00	5,00	OR 185,0x5,0N70
186,00	3,50	OR 186,0x3,5N70
188,00	3,00	OR 188,0x3,0N70
188,00	4,00	OR 188,0x4,0N70
190,00	3,00	OR 190,0x3,0N70
190,00	5,00	OR 190,0x5,0N70
190,00	6,00	OR 190,0x6,0N70
190,00	8,00	OR 190,0x8,0N70
192,00	3,00	OR 192,0x3,0N70
192,00	4,00	OR 192,0x4,0N70
194,00	2,00	OR 194,0x2,0N70
194,00	3,00	OR 194,0x3,0N70
194,00	5,00	OR 194,0x5,0N70
194,10	8,40	OR 194,0x8,4N70
195,00	3,50	OR 195,0x3,5N70
195,00	5,00	OR 195,0x5,0N70
198,00	4,00	OR 198,0x4,0N70
199,30	3,00	OR 199,3x3,0N70
199,50	3,00	OR 199,5x3,0N70
200,00	3,50	OR 200,0x3,5N70
200,00	4,00	OR 200,0x4,0N70
200,00	5,00	OR 200,0x5,0N70
200,00	6,00	OR 200,0x6,0N70
200,00	8,00	OR 200,0x8,0N70
203,00	3,00	OR 203,0x3,0N70
205,00	3,00	OR 205,0x3,0N70
205,00	4,00	OR 205,0x4,0N70
205,00	5,00	OR 205,0x5,0N70

O-Ring

di	s	Part N°.
210,00	3,00	OR 210,0x3,0N70
210,00	4,00	OR 210,0x4,0N70
210,00	5,00	OR 210,0x5,0N70
210,00	8,00	OR 210,0x8,0N70
214,00	5,00	OR 214,0x5,0N70
216,00	4,00	OR 216,0x4,0N70
218,00	4,00	OR 218,0x4,0N70
220,00	3,00	OR 220,0x3,0N70
220,00	4,00	OR 220,0x4,0N70
220,00	5,00	OR 220,0x5,0N70
225,00	3,00	OR 225,0x3,0N70
225,00	5,00	OR 225,0x5,0N70
228,00	4,00	OR 228,0x4,0N70
229,50	3,00	OR 229,5x3,0N70
230,00	5,00	OR 230,0x5,0N70
230,00	8,00	OR 230,0x8,0N70
233,00	3,00	OR 233,0x3,0N70
235,00	5,00	OR 235,0x5,0N70
237,00	6,00	OR 237,0x6,0N70
238,00	5,00	OR 238,0x5,0N70
238,00	6,00	OR 238,0x6,0N70
239,50	3,00	OR 239,5x3,0N70
240,00	3,00	OR 240,0x3,0N70
240,00	4,00	OR 240,0x4,0N70
242,00	4,00	OR 242,0x4,0N70
242,00	5,00	OR 242,0x5,0N70
242,00	6,00	OR 242,0x6,0N70
245,00	4,50	OR 245,0x4,5N70
248,00	5,00	OR 248,0x5,0N70
249,50	3,00	OR 249,5x3,0N70
250,00	3,00	OR 250,0x3,0N70
250,00	4,00	OR 250,0x4,0N70
250,00	5,00	OR 250,0x5,0N70
250,00	6,00	OR 250,0x6,0N70
255,00	4,00	OR 255,0x4,0N70
257,00	3,00	OR 257,0x3,0N70
258,00	8,00	OR 258,0x8,0N70
259,30	3,00	OR 259,3x3,0N70
260,00	3,00	OR 260,0x3,0N70
260,00	4,00	OR 260,0x4,0N70
260,00	5,00	OR 260,0x5,0N70
260,00	6,00	OR 260,0x6,0N70
260,00	8,00	OR 260,0x8,0N70
261,00	5,33	OR 261,0x5,33N70
264,00	8,40	OR 264,0x8,4N70
265,00	2,00	OR 265,0x2,0N70
265,00	4,00	OR 265,0x4,0N70
269,00	3,00	OR 269,0x3,0N70
270,00	3,00	OR 270,0x3,0N70
270,00	5,00	OR 270,0x5,0N70
275,00	5,00	OR 275,0x5,0N70
276,00	3,00	OR 276,0x3,0N70
278,00	8,00	OR 278,0x8,0N70
280,00	3,00	OR 280,0x3,0N70

di	s	Part N°.
280,00	5,00	OR 280,0x5,0N70
281,00	5,00	OR 281,0x5,0N70
285,00	4,00	OR 285,0x4,0N70
290,00	8,00	OR 290,0x8,0N70
294,00	6,00	OR 294,0x6,0N70
296,00	5,33	OR 296,0x5,33N70
297,00	4,00	OR 297,0x4,0N70
299,10	8,40	OR 299,1x8,4N70
300,00	3,00	OR 300,0x3,0N70
300,00	6,00	OR 300,0x6,0N70
301,00	6,00	OR 301,0x6,0N70
302,00	5,00	OR 302,0x5,0N70
305,00	3,00	OR 305,0x3,0N70
305,00	4,50	OR 305,0x4,5N70
305,00	5,00	OR 305,0x5,0N70
310,00	2,50	OR 310,0x2,5N70
310,00	3,00	OR 310,0x3,0N70
310,00	5,00	OR 310,0x5,0N70
310,00	8,00	OR 310,0x8,0N70
315,00	4,00	OR 315,0x4,0N70
315,00	5,00	OR 315,0x5,0N70
320,00	5,00	OR 320,0x5,0N70
325,00	4,00	OR 325,0x4,0N70
325,00	7,50	OR 325,0x7,5N70
328,00	2,50	OR 328,0x2,5N70
330,00	4,00	OR 330,0x4,0N70
330,00	5,00	OR 330,0x5,0N70
330,00	6,00	OR 330,0x6,0N70
335,00	4,00	OR 335,0x4,0N70
338,00	4,00	OR 338,0x4,0N70
340,00	5,00	OR 340,0x5,0-N70
340,00	6,00	OR 340,0x6,0N70
355,00	5,00	OR 355,0x5,0N70
366,00	2,50	OR 366,0x2,5N70
370,00	5,00	OR 370,0x5,0N70
372,50	2,00	OR 372,5x2,0N70
380,00	4,00	OR 380,0x4,0-N70
380,00	8,00	OR 380,0x8,0N70
386,00	6,00	OR 386,0x6,0N70
388,00	7,00	OR 388,0x7,0N70
390,00	4,00	OR 390,0x4,0N70
399,00	4,00	OR 399,0x4,0-N70
400,00	6,00	OR 400,0x6,0N70
410,00	4,00	OR 410,0x4,0N70
425,00	8,00	OR 425,0x8,0N70
430,00	4,00	OR 430,0x4,0N70
441,00	8,00	OR 441,0x8,0N70
445,00	5,00	OR 445,0x5,0N70
465,00	5,30	OR 465,0x5,33N70
465,00	9,00	OR 465,0x9,0N70
478,00	6,00	OR 478,0x6,0N70
480,00	6,00	OR 480,0x6,0N70
500,00	5,00	OR 500,0x5,0N70
500,00	8,00	OR 500,0x8,0N70

Example for ordering O-Ring

OR 36,0x1,5 - N70

Type
Innerdiameter ID
Cross-section
Material code

Material Key:

O-Ring

N70	- NBR	70 Shore A
N80	- NBR	80 Shore A
N90	- NBR	90 Shore A
F70	- FPM	70 Shore A
F80	- FPM	80 Shore A
E70	- EPDM	70 Shore A
S70	- Silcone	70 Shore A

WARNING: Limits of application stated herein are standard values. They could be individually transgressed with due consideration to respective service conditions. In the event of a large duty cycle, pulsating operation and other complex operational conditions, simultaneous transgression of these values is not recommended. Due to a large variety of service conditions that may arise in course of actual use, the company does not take responsibility of or guarantee the functional accuracy of the individual components. Rights for changes are reserved.

O-Ring

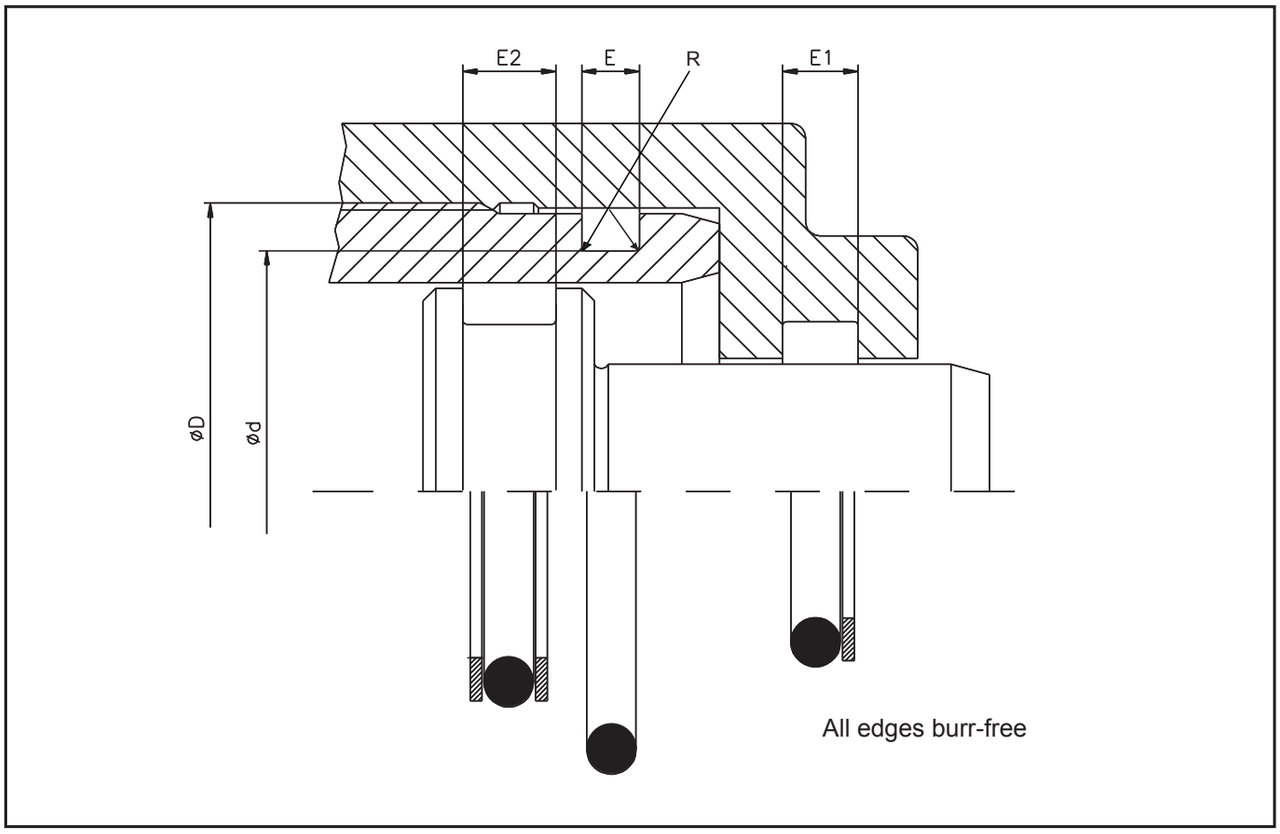

Groove sizes for external sealing applications

Groove Size						O-Ring	Part N°.	
D H8	d h9	E ±0,2	E1 ±0,2	E2 ±0,2	R (max)	di x S	O-Ring Part N°.	Back-up ring Part N°.
8,00	4,20	3,20	4,70	6,20	0,20	3,30 x 2,40	OR 3,30x2,40N70	STR 4/8x1,3-Y95A
8,00	4,20	3,20	4,70	6,20	0,20	3,60 x 2,40	OR 3,60x2,40N70	STR 4/8x1,3-Y95A
9,00	5,20	3,20	4,70	6,20	0,20	4,30 x 2,40	OR 4,30x2,40N70	STR 5/9X1,3-Y95A
9,00	5,20	3,20	4,70	6,20	0,20	4,60 x 2,40	OR 4,60x2,40N70	STR 5/9X1,3-Y95A
10,00	6,20	3,20	4,70	6,20	0,20	5,30 x 2,40	OR 5,30x2,40N70	STR 6/10X1,3-Y95A
10,00	6,20	3,20	4,70	6,20	0,20	5,60 x 2,40	OR 5,60x2,40N70	STR 6/10X1,3-Y95A
11,00	7,20	3,20	4,70	6,20	0,20	6,30 x 2,40	OR 6,30x2,40N70	STR 7/11X1,3-Y95A
11,00	7,20	3,20	4,70	6,20	0,20	6,60 x 2,40	OR 6,60x2,40N70	STR 7/11X1,3-Y95A
12,00	8,20	3,20	4,70	6,20	0,20	7,30 x 2,40	OR 7,30x2,40N70	STR 8/12X1,3-Y95A
12,00	8,20	3,20	4,70	6,20	0,20	7,60 x 2,40	OR 7,60x2,40N70	STR 8/12X1,3-Y95A
13,00	9,20	3,20	4,70	6,20	0,20	8,30 x 2,40	OR 8,30x2,40N70	STR 9/13X1,3-Y95A
13,00	9,20	3,20	4,70	6,20	0,20	8,60 x 2,40	OR 8,60x2,40N70	STR 9/13X1,3-Y95A
14,00	10,20	3,20	4,70	6,20	0,20	9,30 x 2,40	OR 9,30x2,40N70	STR 10/14X1,3-Y95A
14,00	10,20	3,20	4,70	6,20	0,20	9,60 x 2,40	OR 9,6x02,40N70	STR 10/14X1,3-Y95A
14,00	11,40	2,50	4,00	5,50	0,20	10,82 x 1,78	OR 10,82x1,78N70	AF-110-0110014014 -1012
15,00	11,20	3,20	4,70	6,20	0,20	10,30 x 2,40	OR 10,30x2,40N70	STR 11/15X1,3-Y95A
15,00	11,20	3,20	4,70	6,20	0,20	10,60 x 2,40	OR 10,60x2,40N70	STR 11/15X1,3-Y95A
16,00	12,20	3,20	4,70	6,20	0,20	11,30 x 2,40	OR 11,30x2,40N70	STR 12/16X1,3-Y95A
16,00	12,20	3,20	4,70	6,20	0,20	11,60 x 2,40	OR 11,60x2,40N70	STR 12/16X1,3-Y95A

O-Ring

Groove sizes						O-Ring	Part N°.	
D H8	d h9	E ±0,2	E1 ±0,2	E2 ±0,2	R (max)	di x S	O-Ring Part N°.	Back-up ring Part N°.
17,00	13,20	3,20	4,70	6,20	0,20	12,30 x 2,40	OR 12,30x2,40N70	STR 13/17x1,3-Y95A
17,00	13,20	3,20	4,70	6,20	0,20	12,60 x 2,40	OR 12,60x2,40N70	STR 13/17x1,3-Y95A
17,00	12,80	3,50	5,00	6,50	0,20	11,91 x 2,62	OR 11,91x2,62N70	STR 19 - 112/395A
18,00	14,20	3,20	4,70	6,20	0,20	13,30 x 2,40	OR 13,30x2,40N70	STR 14/18x1,3-Y95A
18,00	14,20	3,20	4,70	6,20	0,20	13,60 x 2,40	OR 13,60x2,40N70	STR 14/18x1,3-Y95A
18,50	14,30	3,50	5,00	6,50	0,20	13,95 x 2,62	OR 13,95x2,62N70	STR 19 - 113/395A
19,00	15,20	3,20	4,70	6,20	0,20	14,30 x 2,40	OR 14,30x2,40N70	STR 15/19x1,3-Y95A
19,00	15,20	3,20	4,70	6,20	0,20	14,60 x 2,40	OR 14,60x2,40N70	STR 15/19x1,3-Y95A
19,00	14,80	3,50	5,00	6,50	0,20	13,95 x 2,62	OR 13,95x2,62N70	STR 19 -113/395A
19,00	16,40	2,50	4,00	5,50	0,20	15,60 x 1,78	OR 15,60x1,78N70	AF-110-0190016411-1012
20,00	16,20	3,20	4,70	6,20	0,20	15,30 x 2,40	OR 15,30x2,40N70	STR 16/20x1,3-Y95A
20,00	16,20	3,20	4,70	6,20	0,20	15,60 x 2,40	OR 15,60x2,40N70	STR 16/20x1,3-Y95A
20,00	15,80	3,50	5,00	6,50	0,20	15,08 x 2,62	OR 15,08x2,62N70	STR 19-114/395A
21,00	17,20	3,20	4,70	6,20	0,20	16,30 x 2,40	OR 16,30x2,40N70	STR 17/21x1,3-Y95A
21,00	17,20	3,20	4,70	6,20	0,20	16,60 x 2,40	OR 16,60x2,40N70	STR 17/21x1,3-Y95A
21,00	16,80	3,50	5,00	6,50	0,20	15,88 x 2,62	OR 15,88x2,62N70	STR 19-114/395A
22,00	18,20	3,20	4,70	6,20	0,20	17,30 x 2,40	OR 17,30x2,40N70	STR 18/22x1,3-Y95A
22,00	18,20	3,20	4,70	6,20	0,20	17,60 x 2,40	OR 17,60x2,40N70	STR 18/22x1,3-Y95A
22,00	17,80	3,50	5,00	6,50	0,20	17,13 x 2,62	OR 17,13x2,62N70	,STR 19-115/395A
24,00	19,80	3,50	5,00	6,50	0,20	18,72 x 2,62	OR 18,72x2,62N70	STR 19-116/395A
24,00	21,40	2,50	4,00	5,50	0,20	20,35 x 1,78	OR 20,35x1,78N70	AF 110-0214024011-1012
25,00	20,20	3,90	5,50	7,00	0,30	19,20 x 3,00	OR 19,20x3,00N70	STR 20/25x1,3-Y95A
25,00	20,80	3,50	5,00	6,50	0,20	20,29 x 2,62	OR 20,29x2,62N70	STR 19-117/395A
26,00	21,80	3,50	5,00	6,50	0,20	20,62 x 2,62	OR 20,62x2,62N70	STR 19-117/395A
27,00	22,80	3,50	5,00	6,50	0,20	21,89 x 2,62	OR 21,89x2,62N70	STR 19-118/395A
27,00	22,80	3,50	5,00	6,50	0,20	22,22 x 2,62	OR 22,22x2,62N70	STR 19-118/395A
28,00	23,20	3,90	5,50	7,00	0,30	22,20 x 3,00	OR 22,20x3,00N70	STR 25/30x1,3-Y95A
29,00	24,80	3,50	5,00	6,50	0,20	23,47 x 2,62	OR 23,47x2,62N70	STR 19-119/395A
29,00	23,10	4,50	6,00	7,50	0,40	21,82 x 3,53	OR 21,82x3,53N70	STR 19-211/395A
29,00	24,80	3,50	5,00	6,50	0,20	23,81 x 2,62	OR 23,81x2,62N70	STR 19-119/395A
30,00	25,20	3,90	5,50	7,00	0,30	24,20 x 3,00	OR 24,20x3,00N70	STR 25/30x1,3-Y95A
30,00	25,80	3,50	5,00	6,50	0,20	25,07 x 2,62	OR 25,07x2,62N70	STR 19-120/395A
30,00	24,10	4,50	6,00	7,50	0,40	23,39 x 3,53	OR 23,39x3,53N70	STR 19-213/395A
32,00	27,20	3,90	5,50	7,00	0,30	26,20 x 3,00	OR 26,2 x3,00N70	STR 60/35x1,3-Y95A
32,00	27,80	3,50	5,00	6,50	0,20	26,64 x 2,62	OR 26,64x2,62N70	STR 19-121/395A
32,00	26,10	4,50	6,00	7,50	0,40	24,99 x 3,53	OR 24,99x3,53N70	STR 19-214/395A
33,00	28,80	3,50	5,00	6,50	0,20	28,24 x 2,62	OR 28,24x2,62N70	STR 19-122/395A
33,00	27,10	4,50	6,00	7,50	0,40	25,80 x 3,53	OR 25,80x5,33-N70	STR 19-Y95A
34,00	28,10	4,50	6,00	7,50	0,40	26,58 x 3,53	OR 26,58x3,53N70	STR 19-215/395A
35,00	30,20	3,90	5,50	7,00	0,30	29,20 x 3,00	OR 29,20x3,00N70	STR 30/35x1,3-Y95A
35,00	30,80	3,50	5,00	6,50	0,20	29,82 x 2,62	OR 29,82x2,62N70	STR 19-123/395A
35,00	29,10	4,50	6,00	7,50	0,40	28,17 x 3,53	OR 28,17x3,53N70	STR 19-216/395A
35,00	32,40	2,50	4,00	5,50	0,20	31,47 x 1,78	OR 31,47x1,78N70	AF 110-0324035011-1012
37,00	32,80	3,50	5,00	6,50	0,20	31,42 x 2,62	OR 31,42x2,62N70	STR 19-124/395A
37,00	31,10	4,50	6,00	7,50	0,40	29,75 x 3,53	OR 29,75x3,53N70	STR 19-217/395A
38,00	33,20	3,90	5,50	7,00	0,30	32,20 x 3,00	OR 32,20x3,00N70	STR 35/40x1,3-Y95A
38,00	33,80	3,50	5,00	6,50	0,20	32,99 x 2,62	OR 32,99x2,62N70	STR 19-125/395A
38,00	32,10	4,50	6,00	7,50	0,40	31,34 x 3,53	OR 31,34x3,53N70	STR 19 218/3Y95A
40,00	35,20	3,90	5,50	7,00	0,30	34,20 x 3,00	OR 34,20x3,00N70	STR 35/40x1,3-Y95A
40,00	35,80	3,50	5,00	6,50	0,20	34,59 x 2,62	OR 34,59x2,62N70	STR 19-126/395A
40,00	34,10	4,50	6,00	7,50	0,40	32,92 x 3,53	OR 32,92x3,53N70	STR 19-219/395A
41,00	36,80	3,50	5,00	6,50	0,20	36,17 x 2,62	OR 36,17x2,62N70	STR 19-127/395A
41,00	38,40	2,50	4,00	5,50	0,20	37,82 x 1,78	OR 37,82x1,78N70	AF 110-0370041011 -1012
42,00	37,20	3,90	5,50	7,00	0,30	36,20 x 3,00	OR 36,20x3,00N70	STR 40/45x1,3-Y95A
42,00	36,10	4,50	6,00	7,50	0,40	34,52 x 3,53	OR 34,52x3,53N70	STR 19-220/395A
43,00	38,80	3,50	5,00	6,50	0,20	37,77 x 2,62	OR 37,77x2,62N70	STR 19-128/395A
43,00	37,10	4,50	6,00	7,50	0,40	36,10 x 3,53	OR 36,1x3,53N70	STR 19-221/395A
45,00	40,20	3,90	5,50	7,00	0,30	39,20 x 3,00	OR 39,20x3,00N70	STR 40/45x1,3-Y95A
45,00	40,80	3,50	5,00	6,50	0,20	39,34 x 2,62	OR 39,34x2,62N70	STR 19-129/395A

O-Ring

Groove sizes						O-Ring	Part N°.	
D H8	d h9	E ±0,2	E1 ±0,2	E2 ±0,2	R (max)	di x S	O-Ring Part N°.	Back-up ring Part N°.
45,00	39,10	4,50	6,00	7,50	0,40	37,70 x 3,53	OR 37,7x3,53N70	STR 19-222/395A
45,00	42,40	2,50	4,00	5,50	0,20	41,00 x 1,78	OR 41,0x1,78N70	AF 110-0420045011-1012
46,00	41,80	3,50	5,00	6,50	0,20	40,94 x 2,62	OR 40,94x2,62N70	STR 19-130/395A
46,00	40,10	4,50	6,00	7,50	0,40	39,69 x 3,53	OR 39,69x3,53N70	STR 19-395A
48,00	43,20	3,90	5,50	7,00	0,30	42,20 x 3,00	OR 42,20x3,00N70	STR 45/50x1,3-Y95A
48,00	43,80	3,50	5,00	6,50	0,20	42,52 x 2,62	OR 42,52x2,62N70	STR 19-131/395A
48,00	42,10	4,50	6,00	7,50	0,40	40,87 x 3,53	OR 40,84x3,53N70	STR 19-223/395A
48,00	42,10	4,50	6,00	7,50	0,40	41,28 x 3,53	OR 41,28x3,53N70	STR 19-223/395A
49,00	44,80	3,50	5,00	6,50	0,20	44,12 x 2,62	OR 44,12x2,62N70	STR 19-132/395A
50,00	40,30	7,30	9,10	11,00	0,50	39,20 x 5,70	OR 39,20x5,70N70	STR 40/50x1,7-Y95A
50,00	45,20	3,90	5,50	7,00	0,30	44,20 x 3,00	OR 44,20 x3,00N70	STR 45/50x1,3-Y95A
51,00	46,80	3,50	5,00	6,50	0,20	45,69 x 2,62	OR 45,69x2,62N70	STR 19-133/395A
51,00	45,10	4,50	6,00	7,50	0,40	44,04 x 3,53	OR 44,04x3,53N70	STR 19-224/395A
51,00	45,10	4,50	6,00	7,50	0,40	44,45 x 3,53	OR 44,45x3,53N70	STR 19-224/395A
53,00	48,80	3,50	5,00	6,50	0,20	47,29 x 2,62	OR 47,29x2,62N70	STR 19-134/395A
54,00	49,80	3,50	5,00	6,50	0,20	48,90 x 2,62	OR 48,90x2,62N70	STR 19-135/395A
54,00	48,10	4,50	6,00	7,50	0,40	47,22 x 3,53	OR 47,22x3,53N70	STR 19-225/395A
54,00	48,10	4,50	6,00	7,50	0,40	47,63 x 3,53	OR 47,63x3,53N70	STR 19-225/395A
55,00	45,30	7,30	9,10	11,00	0,50	44,20 x 5,70	OR 44,20x5,70N70	STR 45/55x1,7-Y95A
55,00	50,20	3,90	5,50	7,00	0,30	49,50 x 3,00	OR 49,50x3,0N70	STR 50/55x1,3-Y95A
56,00	51,80	3,50	5,00	6,50	0,20	50,47 x 2,62	OR 50,47x2,62N70	STR 19-136/395A
57,00	52,80	3,50	5,00	6,50	0,20	52,07 x 2,62	OR 52,07x2,62N70	STR 19-137/395A
58,00	52,10	4,50	6,00	7,50	0,40	50,39 x 3,53	OR 50,39x3,53N70	STR 19-226/395A
58,00	52,10	4,50	6,00	7,50	0,40	50,80 x 3,53	OR 50,8x3,53N70	STR 19-226/395A
59,00	54,80	3,50	5,00	6,50	0,20	53,64 x 2,62	OR 53,64x2,62N70	STR 19-138/395A
60,00	50,30	7,30	9,10	11,00	0,50	49,20 x 5,70	OR 49,20x5,70N70	STR 50/60x1,7-Y95A
60,00	55,20	3,90	5,50	7,00	0,30	54,50 x 3,00	OR 54,50x3,00N70	STR 55/60x1,3-Y95A
61,00	56,80	3,50	5,00	6,50	0,20	55,25 x 2,62	OR 55,25x2,62N70	STR 19-139/395A
61,00	55,10	4,50	6,00	7,50	0,40	53,57 x 3,53	OR 53,57x3,53N70	STR 19-227/395A
62,00	57,80	3,50	5,00	6,50	0,20	56,82 x 2,62	OR 56,82x2,62N70	STR 19-140/395A
63,00	53,30	7,30	9,10	11,00	0,50	52,20 x 5,70	OR 52,20x5,70N70	STR 55/65x1,7-Y95A
63,00	58,20	3,90	5,50	7,00	0,30	57,20 x 3,00	OR 57,20x3,00N70	STR 60/65x1,3-Y95A
64,00	59,80	3,50	5,00	6,50	0,20	58,42 x 2,62	OR 58,42x2,62N70	STR 19-141/395A
64,00	58,10	4,50	6,00	7,50	0,40	56,70 x 3,53	OR 56,7x3,53N70	STR 19-228/395A
64,00	58,10	4,50	6,00	7,50	0,40	57,15 x 3,53	OR 57,15x3,53N70	STR 19-228/395A
65,00	55,30	7,30	9,10	11,00	0,50	54,20 x 5,70	OR 54,20x5,70N70	STR 55/65x1,7-Y95A
65,00	60,20	3,90	5,50	7,00	0,30	59,50 x 3,00	OR 59,50x3,00N70	STR 60/65x1,3-Y95A
65,00	60,80	3,50	5,00	6,50	0,20	59,99 x 2,62	OR 59,99x2,62N70	STR 19-142/395A
67,00	62,80	3,50	5,00	6,50	0,20	61,60 x 2,62	OR 61,6x2,62N70	STR 19-143/395A
67,00	61,10	4,50	6,00	7,50	0,40	59,92 x 3,53	OR 59,92x3,53N70	STR 19-229/395A
67,00	61,10	4,50	6,00	7,50	0,40	60,30 x 3,53	OR 60,3x3,53N70	STR 19-229/395A
68,00	63,80	3,50	5,00	6,50	0,20	63,17 x 2,62	OR 63,17x2,62N70	STR 19-144/395A
70,00	60,30	7,30	9,10	11,00	0,50	59,20 x 5,70	OR 59,20x5,70N70	STR 60/70x1,7-Y95A
70,00	65,20	3,90	5,50	7,00	0,30	64,50 x 3,00	OR 64,50x3,00N70	STR 35/70x1,3-Y95A
70,00	65,80	3,50	5,00	6,50	0,20	64,77 x 2,62	OR 64,77x2,62N70	STR 19-145/395A
70,00	64,10	4,50	6,00	7,50	0,40	63,09 x 3,53	OR 63,09x3,53-N70	STR 19-232/395A
70,00	61,00	7,00	8,80	11,00	0,50	59,69 x 5,33	OR 59,69x5,33-N70	STR 19-332/395A
70,00	64,10	4,50	6,00	7,50	0,40	63,50 x 3,53	OR 63,50x3,53-N70	STR 19-232/395A
72,00	67,80	3,50	5,00	6,50	0,20	66,34 x 2,62	OR 66,34x2,62-N70	STR 19-146/395A
73,00	68,80	3,50	5,00	6,50	0,20	67,95 x 2,62	OR 67,95x2,62-N70	STR 19147-/395A
73,00	67,10	4,50	6,00	7,50	0,40	66,27 x 3,53	OR 66,27x3,53-N70	STR 19-231/395A
73,00	64,00	7,00	8,80	11,00	0,50	62,87 x 5,33	OR 62,87x5,33-N70	STR 19-333/395A
73,00	67,10	4,50	6,00	7,50	0,40	66,68 x3,53	OR 66,68x3,53-N70	STR 19-231/395A
75,00	65,30	7,30	9,10	11,00	0,50	64,20 x 5,70	OR 64,20x5,70-N70	STR 65/75x1,7-Y95A
75,00	70,20	3,90	5,50	7,00	0,30	69,50 x 3,00	OR 69,50x3,00-N70	STR 70/75x1,3-Y95A
75,00	70,80	3,50	5,00	6,50	0,20	69,52 x 2,62	OR 69,52x2,62-N70	STR 19-142/395A
76,00	71,80	3,50	5,00	6,50	0,20	71,12 x 2,62	OR 71,12x2,62-N70	STR 19-149/395A
77,00	71,10	4,50	6,00	7,50	0,40	69,44 x 3,53	OR 69,44x3,53-N70	STR 19-232/395A
77,00	68,00	7,00	8,80	11,00	0,50	66,04 x 5,33	OR 66,04x5,33-N70	STR 19-334/395A

O-Ring

Groove sizes						O-Ring	Part N°.	
D H8	d h9	E ±0,2	E1 ±0,2	E2 ±0,2	R (max)	di x S	O-Ring Part N°.	Back-up ring Part N°.
77,00	71,10	4,50	6,00	7,50	0,40	69,85 x 3,53	OR 69,85x3,53-N70	STR 19-232/395A
80,00	70,30	7,30	9,10	11,00	0,50	69,20 x 5,70	OR 69,20x5,70-N70	STR 70/80x1,7-Y95A
80,00	75,20	3,90	5,50	7,00	0,30	74,50 x 3,00	OR 74,50x3,00-N70	STR 75/80x1,3-Y95A
80,00	74,10	4,50	6,00	7,50	0,40	72,62 x 3,53	OR 72,62x3,53-N70	STR 19-233/395A
80,00	71,00	7,00	8,80	11,00	0,50	69,22 x 5,33	OR 69,22x5,33-N70	STR 19-335/395A
80,00	74,10	4,50	6,00	7,50	0,40	73,03 x 3,53	OR 73,03x3,53-N70	STR 19-233/395A
83,00	77,10	4,50	6,00	7,50	0,40	75,79 x 3,53	OR 75,79x3,53-N70	STR 19-234/395A
83,00	74,00	7,00	8,80	11,00	0,50	72,40 x 5,33	OR 72,40x5,33-N70	STR 19-336/395A
85,00	75,30	7,30	9,10	11,00	0,50	74,20 x 5,70	OR 74,20x5,70-N70	STR 75/85x1,7-Y95A
85,00	80,20	3,90	5,50	7,00	0,30	79,50 x 3,00	OR 79,50x3,00-N70	STR 80/85x1,3-Y95A
86,00	80,10	4,50	6,00	7,50	0,40	78,90 x 3,53	OR 78,90x3,53-N70	STR 19-235/395A
86,00	77,00	7,00	8,80	11,00	0,50	75,57 x 5,33	OR 75,57x5,33-N70	STR 19-337/395A
89,00	83,10	4,50	6,00	7,50	0,40	82,14 x 3,53	OR 82,14x3,53-N70	STR 19-236/395A
90,00	80,30	7,30	9,10	11,00	0,50	79,20 x 5,70	OR 79,20x5,70-N70	STR 80/90x1,7-Y95A
90,00	85,20	3,90	5,50	7,00	0,30	84,50 x 3,00	OR 84,50x3,00-N70	STR 85/90x1,3-Y95A
90,00	81,00	7,00	8,80	11,00	0,50	78,74 x 5,33	OR 78,74x5,33-N70	STR 19-338/395A
92,00	86,10	4,50	6,00	7,50	0,40	85,32 x 3,53	OR 85,32x3,53-N70	STR 19-237/395A
92,00	83,00	7,00	8,80	11,00	0,50	81,92 x 5,33	OR 81,92x5,33-N70	STR 19-339/395A
94,00	89,80	3,50	5,00	6,50	0,20	88,57 x 2,62	OR 88,57x2,62-N70	STR 19-153/395A
95,00	90,20	3,90	5,50	7,00	0,30	89,50 x 3,00	OR 89,50x3,00-N70	STR 90/95x1,3-Y95A
95,00	85,30	7,30	9,10	11,00	0,50	84,10 x 5,70	OR 84,10x5,70-N70	STR 85/90x1,7-Y95A
95,00	89,10	4,50	6,00	7,50	0,40	88,49 x 3,53	OR 88,49x3,53-N70	STR 19-238/395A
95,00	86,00	7,00	8,80	11,00	0,50	85,09 x 5,33	OR 85,09x5,33-N70	STR 19-340/395A
98,00	89,00	7,00	8,80	11,00	0,50	88,27 x 5,33	OR 88,27x5,33-N70	STR 19-341/395A
99,00	93,10	4,50	6,00	7,50	0,40	91,67 x 3,53	OR 91,67x3,53-N70	STR 19-239/395A
100,00	95,20	3,90	5,50	7,00	0,30	94,50 x 3,00	OR 94,50x3,00-N70	STR 95/100x1,3-Y95A
100,00	90,30	7,30	9,10	11,00	0,50	89,10 x 5,70	OR 89,10x5,70-N70	STR 90/100x1,7-Y95A
101,00	96,80	3,50	5,00	6,50	0,20	94,92 x 2,62	OR 94,92x2,62-N70	STR 19-154/395A
102,00	96,10	4,50	6,00	7,50	0,40	94,84 x 3,53	OR 94,84x3,53-N70	STR 19-240/395A
102,00	93,00	7,00	8,80	11,00	0,50	91,44 x 5,33	OR 91,44x5,33-N70	STR 19-342/395A
105,00	95,30	7,30	9,10	11,00	0,50	94,10 x 5,70	OR 94,10x5,70-N70	STR 95/105x1,7-Y95A
105,00	100,20	3,90	5,50	7,00	0,30	99,50 x 3,00	OR 99,50x3,00-N70	STR 100/105x1,3-Y95A
105,00	99,10	4,50	6,00	7,50	0,40	98,02 x 3,53	OR 98,02x3,53-N70	STR 19-241/395A
105,00	96,00	7,00	8,80	11,00	0,50	94,62 x 5,33	OR 94,62x5,33-N70	STR 19-/343395A
108,00	102,10	4,50	6,00	7,50	0,40	101,19 x 3,53	OR 101,19x3,53-N70	STR 19-242/395A
108,00	99,00	7,00	8,80	11,00	0,50	97,79 x 5,33	OR 97,79x5,33-N70	STR 19-344/395A
110,00	100,30	7,30	9,10	11,00	0,50	99,10 x 5,70	OR 99,10x5,70-N70	STR 100/110x1,7-Y95A
110,00	105,20	3,90	5,50	7,00	0,30	104,50 x 3,00	OR 104,50x3,00-N70	STR 105/110x1,3-Y95A
111,00	105,10	4,50	6,00	7,50	0,40	104,37 x 3,53	OR 104,37x3,53-N70	STR 19-243/395A
111,00	102,00	7,00	8,80	11,00	0,50	100,97 x 5,33	OR 100,97x5,33-N70	STR 19-345/395A
114,00	108,10	4,50	6,00	7,50	0,40	107,54 x 3,53	OR 107,54x3,53-N70	STR 19-244/395A
115,00	105,30	7,30	9,10	11,00	0,50	104,10 x 5,70	OR 104,10x5,70-N70	STR 105/115x1,7-Y95A
115,00	110,20	3,90	5,50	7,00	0,30	109,50 x 3,00	OR 109,50x3,00-N70	STR 110/115x1,3-Y95A
115,00	106,00	7,00	8,80	11,00	0,50	104,14 x 5,33	OR 104,14x5,33-N70	STR 19-346/395A
118,00	112,10	4,50	6,00	7,50	0,40	110,72 x 3,53	OR 110,72x3,53-N70	STR 19-245/395A
118,00	109,00	7,00	8,80	11,00	0,50	107,32 x 5,33	OR 107,32x5,33-N70	STR 19-347/395A
120,00	110,30	7,30	9,10	11,00	0,50	109,10 x 5,70	OR 109,10x5,70-N70	STR 110/120x1,7-Y95A
120,00	115,20	3,90	5,50	7,00	0,30	114,50 x 3,00	OR 114,50x3,00-N70	STR 115/125x1,3-Y95A
121,00	115,10	4,50	6,00	7,50	0,40	113,90 x 3,53	OR 113,90x3,53-N70	STR 19-246/395A
121,00	112,00	7,00	8,80	11,00	0,50	110,49 x 5,33	OR 110,49x5,33-N70	STR 19-348/395A
124,00	118,10	4,50	6,00	7,50	0,40	117,07 x 3,53	OR 117,07x3,53-N70	STR 19-247/395A
125,00	115,30	7,30	9,10	11,00	0,50	114,10 x 5,70	OR 114,1x5,70-N70	STR 115/125x1,7-Y95A
125,00	120,20	3,90	5,50	7,00	0,30	119,50 x 3,00	OR 119,50x3,00-N70	STR 120/125x1,3-Y95A
125,00	116,00	7,00	8,80	11,00	0,50	113,67 x 5,33	OR 113,67x5,33-N70	STR 19-349/395A
127,00	121,10	4,50	6,00	7,50	0,40	120,24 x 3,53	OR 120,24x3,53-N70	STR 19-248/395A
127,00	115,20	9,50	12,00	15,00	0,60	113,67 x 6,99	OR 113,67x6,99-N70	STR 19-425/395A
128,00	119,00	7,00	8,80	11,00	0,50	116,84 x 5,33	OR 116,84x5,33-N70	STR 19-350/395A
128,00	119,00	7,00	8,80	11,00	0,50	117,48 x 5,33	OR 117,48x5,33-N70	STR 19-351/395A

O-Ring

Groove sizes						O-Ring	Part N°.	
D H8	d h9	E ±0,2	E1 ±0,2	E2 ±0,2	R (max)	di x S	O-Ring Part N°.	Back-up ring Part N°.
130,00	125,20	3,90	5,50	7,00	0,30	124,50 x 3,00	OR 124,50x3,00-N70	STR 125/130x1,3-Y95A
130,00	124,10	4,50	6,00	7,50	0,40	123,42 x 3,53	OR 123,42x3,53-N70	STR 19-249/395A
130,00	118,20	9,50	12,00	15,00	0,60	116,84 x 6,99	OR 116,84x6,99-N70	AF-110-1182130021-1012
132,00	123,00	7,00	8,80	11,00	0,50	120,02 x 5,33	OR 120,02x5,33-N70	STR 19-351/395A
132,00	123,00	7,00	8,80	11,00	0,50	120,70 x 5,33	OR 120,70x5,33-N70	STR 19-351/395A
133,00	127,10	4,50	6,00	7,50	0,40	126,60 x 3,53	OR 126,60x3,53-N70	STR 19-250/395A
135,00	125,30	7,30	9,10	11,00	0,50	124,30 x 5,70	OR 124,30x5,70-N70	STR 125/135x1,7-Y95A
135,00	130,20	3,90	5,50	7,00	0,30	129,50 x 3,00	OR 129,50x3,00-N70	STR 130/135x1,3-Y95A
135,00	126,00	7,00	8,80	11,00	0,50	123,80 x 5,33	OR 123,80x5,33-N70	STR 19-352/395A
135,00	123,20	9,50	12,00	15,00	0,60	120,02 x 6,99	OR 120,02x6,99-N70	STR 19-427/395A
136,00	130,10	4,50	6,00	7,50	0,40	129,77 x 3,53	OR 129,77x3,53-N70	STR 19-251/395A
137,00	128,00	7,00	8,80	11,00	0,50	126,37 x 5,33	OR 126,37x5,33-N70	STR 19-353/395A
137,00	125,20	9,50	12,00	15,00	0,60	123,19 x 6,99	OR 123,19x6,99-N70	STR 19-428/395A
137,00	128,00	7,00	8,80	11,00	0,50	127,00 x 5,33	OR 127,00x5,33-N70	STR 19-429/395A
140,00	130,30	7,30	9,10	11,00	0,50	129,30 x 5,70	OR 129,30x5,70-N70	STR 130/140x1,7-Y95A
140,00	135,20	3,90	5,50	7,00	0,30	134,50 x 3,00	OR 134,50x3,00-N70	STR 135/140x1,3-Y95A
140,00	134,10	4,50	6,00	7,50	0,40	132,94 x 3,53	OR 132,94x3,53-N70	STR 19-252/395A
140,00	131,00	7,00	8,80	11,00	0,50	129,54 x 5,33	OR 129,54x5,33-N70	STR 19-354/395A
140,00	128,20	9,50	12,00	15,00	0,60	126,37 x 6,99	OR 126,37x6,99-N70	STR 19-429/395A
140,00	131,00	7,00	8,80	11,00	0,50	130,20 x 5,33	OR 130,20x5,33-N70	STR 19-354/395A
143,00	137,10	4,50	6,00	7,50	0,40	136,12 x 3,53	OR 136,12x3,53-N70	STR 19-253/395A
143,00	134,00	7,00	8,80	11,00	0,50	132,72 x 5,33	OR 132,72x5,33-N70	STR 19-355/395A
145,00	135,30	7,30	9,10	11,00	0,50	134,30 x 5,70	OR 134,30x5,70-N70	STR 135/145x1,7-Y95A
145,00	140,20	3,90	5,50	7,00	0,30	139,50 x 3,00	OR 139,50x3,00-N70	STR 140/145x1,3-Y95A
146,00	140,10	4,50	6,00	7,50	0,40	139,30 x 3,53	OR 139,30x3,53-N70	STR 19-254/395A
146,00	134,20	9,50	12,00	15,00	0,60	132,72 x 6,99	OR 132,72x6,99-N70	STR 19-431/395A
147,00	138,00	7,00	8,80	11,00	0,50	135,90 x 5,33	OR 135,90x5,33-N70	STR 19-356/395A
147,00	138,00	7,00	8,80	11,00	0,50	136,53 x 5,33	OR 136,53x5,33-N70	STR 19-356/395A
149,00	143,10	4,50	6,00	7,50	0,40	142,47 x 3,53	OR 142,47x3,53-N70	STR 19-255/395A
150,00	140,30	7,30	9,10	11,00	0,50	139,30 x 5,70	OR 139,30x5,70-N70	STR 140/150x1,7-Y95A
150,00	145,20	3,90	5,50	7,00	0,30	144,50 x 3,00	OR 144,50x3,00-N70	STR 145/150x1,3-Y95A
150,00	141,00	7,00	8,80	11,00	0,50	139,07 x 5,33	OR 139,07x5,33-N70	STR 19-357/395A
150,00	138,20	9,50	12,00	15,00	0,60	135,80 x 6,99	OR 135,80x6,99-N70	STR 19-432/395A
150,00	141,00	7,00	8,80	11,00	0,50	139,70 x 5,33	OR 139,70x5,33-N70	STR 19-357/395A
153,00	144,00	7,00	8,80	11,00	0,50	142,24 x 5,33	OR 142,24x5,33-N70	STR 19-358/395A
153,00	141,20	9,50	12,00	15,00	0,60	139,07 x 6,99	OR 139,07x6,99-N70	STR 19-433/395A
153,00	144,00	7,00	8,80	11,00	0,50	142,88 x 5,33	OR 142,88x5,33-N70	STR 19-358/395A
155,00	145,30	7,30	9,10	11,00	0,50	144,30 x 5,70	OR 144,30x5,70-N70	STR 145/155x1,7-Y95A
155,00	149,10	4,50	6,00	7,50	0,40	148,82 x 3,53	OR 148,82x3,53-N70	STR 19-257/395A
159,00	153,10	4,50	6,00	7,50	0,40	151,99 x 3,53	OR 151,99x3,53-N70	STR 19-258/395A
160,00	150,30	7,30	9,10	11,00	0,50	149,30 x 5,70	OR 149,30x5,70-N70	STR 150/160x1,7-Y95A
160,00	151,00	7,00	8,80	11,00	0,50	148,59 x 5,33	OR 148,59x5,33-N70	STR 19-360/395A
160,00	148,20	9,50	12,00	15,00	0,60	145,42 x 6,99	OR 145,42x6,99-N70	STR 19-435/395A
160,00	151,00	7,00	8,80	11,00	0,50	149,23 x 5,33	OR 149,23x5,33-N70	STR 19-360/395A
165,00	155,30	7,30	9,10	11,00	0,50	154,30 x 5,70	OR 154,30x5,70-N70	STR 155/165x1,7-Y95A
165,00	153,20	9,50	12,00	15,00	0,60	151,77 x 6,99	OR 151,77x6,99-N70	STR 19-437/395A
169,00	160,00	7,00	8,80	11,00	0,50	158,12 x 5,33	OR 158,12x5,33-N70	STR 19-362/395A
170,00	160,30	7,30	9,10	11,00	0,50	159,30 x 5,70	OR 159,30x5,70-N70	STR 160/170x1,7-Y95A
175,00	165,30	7,30	9,10	11,00	0,50	164,30 x 5,70	OR 164,30x5,70-N70	STR 165/175x1,7-Y95A
175,00	166,00	7,00	8,80	11,00	0,50	164,47 x 5,33	OR 164,47x5,33-N70	STR 19-363/395A
180,00	170,30	7,30	9,10	11,00	0,50	169,30 x 5,70	OR 169,30x5,70-N70	STR 170/180x1,7-Y95A
182,00	173,00	7,00	8,80	11,00	0,50	170,82 x 5,33	OR 170,82x5,33-N70	STR 19-364/395A
185,00	175,30	7,30	9,10	11,00	0,50	174,30 x 5,70	OR 174,30x5,70-N70	STR 175/185x1,7-Y95A
188,00	179,00	7,00	8,80	11,00	0,50	177,17 x 5,33	OR 177,17x5,33-N70	STR 19-365/395A
190,00	180,30	7,30	9,10	11,00	0,50	179,30 x 5,70	OR 179,30x5,70-N70	STR 180/190x1,7-Y95A
195,00	185,30	7,30	9,10	11,00	0,50	184,30 x 5,70	OR 184,30x5,70-N70	STR 185/195x1,7-Y95A
195,00	186,00	7,00	8,80	11,00	0,50	183,52 x 5,33	OR 183,52x5,33-N70	STR 19-366/395A
197,00	185,20	9,50	12,00	15,00	0,60	183,52 x 6,99	OR 183,52x6,99-N70	STR 19-442/395A
200,00	190,30	7,30	9,10	11,00	0,50	189,30 x 5,70	OR 189,30x5,70-N70	STR 190/200x1,7-Y95A

O-Ring

Groove sizes						O-Ring	Part N°.	
D H8	d h9	E ±0,2	E1 ±0,2	E2 ±0,2	R (max)	di x S	O-Ring Part N°.	Back-up ring Part N°.
200,00	191,00	7,00	8,80	11,00	0,50	189,87 x 5,33	OR 189,87x5,33-N70	STR 19-367/395A
203,00	191,20	9,50	12,00	15,00	0,60	189,87 x 6,99	OR 189,87x6,99-N70	STR 19-443/395A
205,00	195,30	7,30	9,10	11,00	0,50	194,30 x 5,70	OR 194,30x5,70-N70	STR 195/205x1,7-Y95A
207,00	198,00	7,00	8,80	11,00	0,50	196,22 x 5,33	OR 196,22x5,33-N70	STR 19-368/395A
210,00	200,30	7,30	9,10	11,00	0,50	199,30 x 5,70	OR 199,30x5,70-N70	STR 200/210x1,7-Y95A
210,00	204,10	4,50	6,00	7,50	0,40	202,80 x 3,53	OR 202,80x3,53-N70	STR 19-266/395A
210,00	198,20	9,50	12,00	15,00	0,60	196,20 x 6,99	OR 196,20x6,99-N70	STR 19-444/395A
220,00	210,30	7,30	9,10	11,00	0,50	209,30 x 5,70	OR 209,30x6,99-N70	STR 210/220x1,7-Y95A
220,00	211,00	7,00	8,80	11,00	0,50	208,92 x 5,33	OR 208,92x5,33-N70	STR 19-370/395A
230,00	220,30	7,30	9,10	11,00	0,50	219,30 x 5,70	OR 219,30x5,70-N70	STR 220/230x1,7-Y95A
230,00	218,20	9,50	12,00	15,00	0,60	215,27 x 6,99	OR 215,27x6,99-N70	STR 19-446/395A
232,00	223,00	7,00	8,80	11,00	0,50	221,62 x 5,33	OR 221,62x5,33-N70	STR 19-372/395A
239,00	230,00	7,00	8,80	11,00	0,50	227,97 x 5,33	OR 227,97x5,33-N70	STR 19-373/395A
240,00	230,30	7,30	9,10	11,00	0,50	229,30 x 5,70	OR 229,30x5,70-N70	STR 230/240x1,7-Y95A
242,00	230,20	9,50	12,00	15,00	0,60	227,97 x 6,99	OR 227,97x6,99-N70	STR 19-447/395A
245,00	236,00	7,00	8,80	11,00	0,50	234,32 x 5,33	OR 234,32x5,33-N70	STR 19-374/395A
250,00	240,30	7,30	9,10	11,00	0,50	239,30 x 5,70	OR 239,30x5,70-N70	STR 240/250x1,7-Y95A
255,00	243,20	9,50	12,00	15,00	0,60	240,67 x 6,99	OR 240,67x6,99-N70	STR 19-448/395A
260,00	250,30	7,30	9,10	11,00	0,50	249,30 x 5,70	OR 249,30x5,70-N70	STR 250/260x1,7-Y95A
270,00	258,20	9,50	12,00	15,00	0,60	253,57 x 6,99	OR 253,57x6,99-N70	STR 19-449/395A
270,00	260,30	7,30	9,10	11,00	0,50	259,30 x 5,70	OR 259,30x5,70-N70	STR 260/270x1,7-Y95A
280,00	270,30	7,30	9,10	11,00	0,50	269,30 x 5,70	OR 269,30x5,70-N70	STR 270/280x1,7-Y95A
286,00	274,20	9,50	12,00	15,00	0,60	272,40 x 6,99	OR 272,40x6,99-N70	AF-120-2742286020-1012
290,00	280,30	7,30	9,10	11,00	0,50	279,30 x 5,70	OR 279,30x5,70-N70	AF-110-2900280017-1012
295,00	283,20	9,50	12,00	15,00	0,60	278,77 x 6,99	OR 278,77x6,99-N70	AF-110-2950283220-1012
300,00	290,30	7,30	9,10	11,00	0,50	289,30 x 5,70	OR 289,30x5,70-N70	AF-110-2900300017-1012
300,00	288,20	9,50	12,00	15,00	0,60	285,10 x 6,99	OR 285,10x6,99-N70	AF-110-3000288220-1012

O-Ring

Example for ordering O-Ring AS 568A:

OR 13,95 x 2,62 - N70

Type
Nominal ID diameter
Cross-section
Standard material

Example for ordering O-Ring metric:

OR 36,20 x 3,0 - N70

Type
Nominal ID diameter
Cross-section
Standard material

Example for ordering Back-up Ring meteric:

STR 165 / 175 x 1,7 - Y95A

Type (endless)
Nominal ID diameter
Nominal OD diameter
Width
Standard material

Example for ordering Back-up Ring AS:

AF-110-2678280025-1012

Type (cut)
Nominal diameter x 10
Nominal diameter x 10
Width x 10
Standard material

Material Key:

O-Ring

N70 - NBR	70 Shore A
N80 - NBR	80 Shore A
N90 - NBR	90 Shore A
F70 - FPM	70 Shore A
F80 - FPM	80 Shore A
E70 - EPDM	70 Shore A
S70 - Silicone	70 Shore A

Material Key:

Back-up ring PTFE design
AF-120 (endless/solid)
AF-100 (spiral)
AF-110 (30 degree split)
AF-150 (concave endless/solid)
AF-140 (concave split)

Material Back-up rings
PU - Polyurethane Y95A or 395A
Material made from order
AF-1012 - PTFE pure
AF-4115 - PTFE glass filled
AF-2426 - PTFE carbon
AF-5640 - PTFE bronze

WARNING: Limits of application stated herein are standard values. They could be individually transgressed with due consideration to respective service conditions. In the event of a large duty cycle, pulsating operation and other complex operational conditions, simultaneous transgression of these values is not recommended. Due to a large variety of service conditions that may arise in course of actual use, the company does not take responsibility of or guarantee the functional accuracy of the individual components. Rights for changes are reserved.

O-Ring

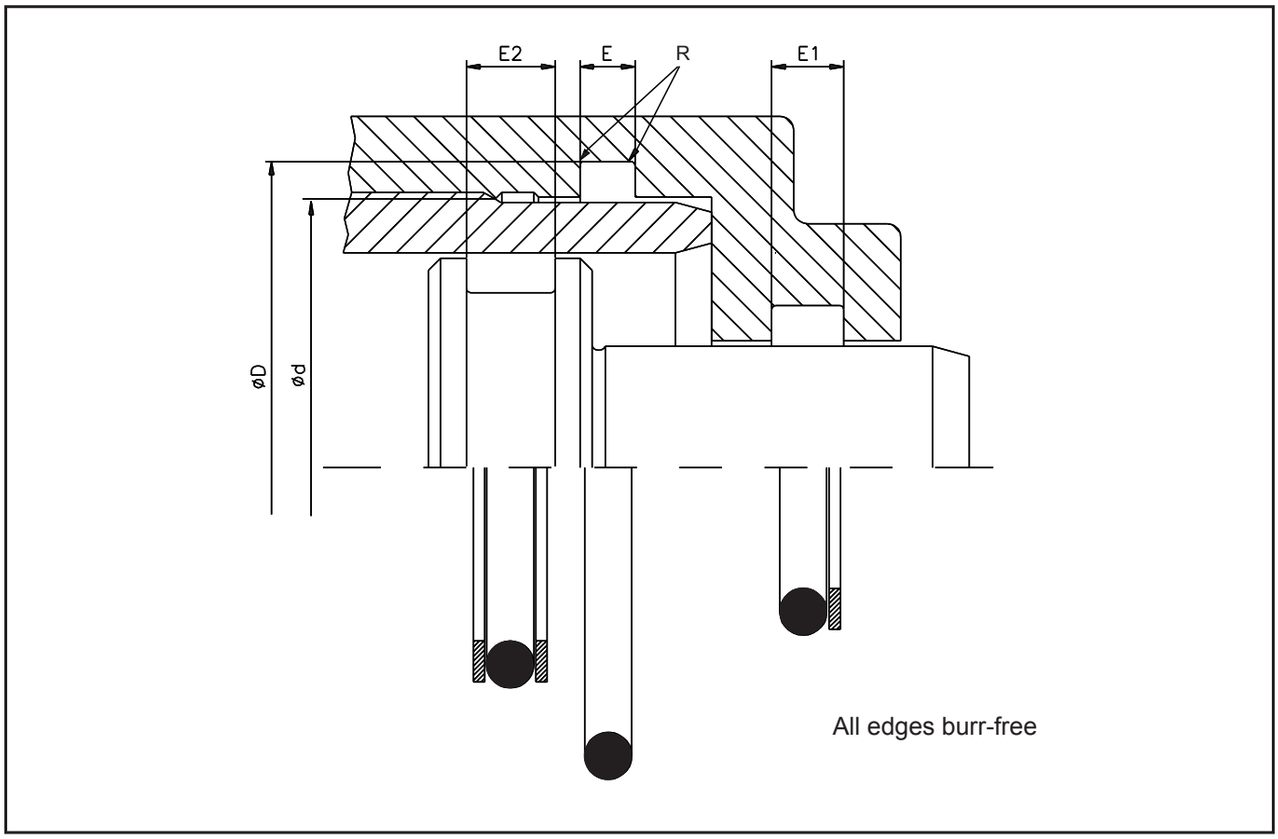

Groove sizes for static internal sealing applications

Groove sizes						O-Ring	Part N°.	
d f7	D H9	E ±0,2	E1 ±0,2	E2 ±0,2	R (max)	di x S	O-Ring Part N°.	Back-up ring Part N°.
2,50	5,10	2,50	4,00	5,50	0,20	2,57 x 1,78	OR 2,57x1,78-N70	AF-120-0025005410-1012
4,00	7,80	3,20	4,70	6,20	0,20	3,30 x 2,40	OR 3,30x2,40-N70	STR 4/8X1,3-Y95A
5,00	8,80	3,20	4,70	6,20	0,20	4,30 x 2,40	OR 4,30x2,40-N70	STR 5/9X1,3-Y95A
6,00	9,80	3,20	4,70	6,20	0,20	5,30 x 2,40	OR 5,30x2,40-N70	STR 6/10X1,3-Y95A
6,00	8,60	2,50	4,00	5,50	0,20	6,07 x 1,78	OR 6,07x1,78-N70	AF-120-0060008910-1012
7,00	10,80	3,20	4,70	6,20	0,20	6,30 x 2,40	OR 6,30x2,40-N70	STR 7/11x1,3-Y95A
8,00	11,80	3,20	4,70	6,20	0,20	7,30 x 2,40	OR 7,30x2,40-N70	STR 8/12x1,3-Y95A
8,00	10,60	2,50	4,00	5,50	0,20	7,66 x 1,78	OR 7,66x1,78-N70	AF-120-0080010910-1012
9,00	12,80	3,20	4,70	6,20	0,20	8,30 x 2,40	OR 8,30x2,40-N70	STR 9/13x1,3-Y95A
9,00	11,60	2,50	4,00	5,50	0,20	9,25 x 1,78	OR 9,25x1,78-N70	AF-120 0090011910-1012
10,00	13,80	3,20	4,70	6,20	0,20	9,30 x 2,40	OR 9,30x2,40-N70	STR 10/14x1,3-Y95A
11,00	14,80	3,20	4,70	6,20	0,20	10,30 x 2,40	OR 10,30x2,40-N70	STR 11/15x1,3-Y95A
11,00	15,20	3,50	5,00	6,50	0,20	10,78 x 2,62	OR 10,78x2,62-N70	STR 19-111/395A
11,00	13,60	2,50	4,00	5,50	0,20	10,82 x 1,78	OR 10,82x1,78-N70	AF-120 0011013910-1012
12,00	15,80	3,20	4,70	6,20	0,20	11,30 x 2,40	OR 11,30x,40-N70	STR 12/16x1,3-Y95A
12,50	16,70	3,50	5,00	6,50	0,20	12,37 x 2,62	OR 12,37x2,62-N70	STR 19-112/395A
13,00	16,80	3,20	4,70	6,20	0,20	12,30 x 2,40	OR 12,30x2,40-N70	STR 13/17x1,3-Y95A
13,00	15,60	2,50	4,00	5,50	0,20	12,42 x 1,78	OR 0014-1,78-N70	AF-120-0130015910-1012
14,00	17,80	3,20	4,70	6,20	0,20	13,30 x 2,40	OR 13,30x2,40-N70	STR 14/18x1,3-Y95A
14,00	18,20	3,50	5,00	6,50	0,20	13,95 x 2,62	OR 13,95x2,62-N70	STR 19-113/395A
14,00	16,60	2,50	4,00	5,50	0,20	14,00 x 1,78	OR 14,00x1,78-N70	AF-120-0140016910-1012

O-Ring

Groove sizes						O-Ring	Part N°.	
d f7	D H9	E ±0,2	E1 ±0,2	E2 ±0,2	R (max)	di x S	O-Ring Part N°.	Back-up ring Part N°.
15,00	18,80	3,20	4,70	6,20	0,20	14,30 x 2,40	OR 14,30x2,40-N70	STR 15/19x1,3-Y95A
15,50	19,70	3,50	5,00	6,50	0,20	15,54 x 2,62	OR 15,54x2,62-N70	STR 19-114/395A
16,00	19,80	3,20	4,70	6,20	0,20	15,30 x 2,40	OR15,30x2,40-N70	STR 16/20x1,3-Y95A
15,50	19,70	3,50	5,00	6,50	0,20	15,54 x 2,62	OR 15,54x2,62-N70	STR 19-114/395A
16,00	19,80	3,20	4,70	6,20	0,20	15,30 x 2,40	OR15,30x2,40-N70	STR 16/20x1,3-Y95A
16,00	18,60	2,50	4,00	5,50	0,20	15,60 x 1,78	OR 15,60x1,78-N70	AF-120-0160018910-1012
17,00	20,80	3,20	4,70	6,20	0,20	16,30 x 2,40	OR 16,30x2,40-N70	STR 17/21x1,3-Y95A
17,00	21,20	3,50	5,00	6,50	0,20	17,13 x 2,62	OR 17,13x2,62-N70	STR 19-115/395A
17,00	19,60	2,50	4,00	5,50	0,20	17,17 x 1,78	OR 17,17x1,78-N70	AF-120 017019910-1012
18,00	21,80	3,20	4,70	6,20	0,20	17,30 x 2,40	OR 17,30x2,40-N70	STR 18/22x1,3-Y95A
19,00	23,20	3,50	5,00	6,50	0,20	18,72 x 2,62	OR 18,72x2,62-N70	STR 19-116/395A
19,00	24,90	4,50	6,00	7,50	0,40	18,64 x 3,53	OR 18,64x3,53-N70	STR 19-210/395A
20,00	24,80	3,90	5,50	7,00	0,30	19,20 x 3,00	OR 19,20x3,00-N70	STR 20/25x1,3-Y95A
20,00	24,20	3,50	5,00	6,50	0,20	20,29 x 2,62	OR 20,29x2,62-N70	STR 19-117/395A
20,00	25,90	4,50	6,00	7,50	0,40	20,22 x 3,53	OR 20,22x3,53-N70	STR 19-211/395A
21,00	23,60	2,50	4,00	5,50	0,20	20,35 x 1,78	OR 20,35x1,78-N70	AF-120-0210023910-1012
22,00	26,20	3,50	5,00	6,50	0,20	21,89 x 2,62	OR 21,89x2,62-N70	STR 19-118/395A
22,00	27,90	4,50	6,00	7,50	0,40	21,82 x 3,53	OR 21,82x3,53-N70	STR 19-212/395A
22,00	26,20	3,50	5,00	6,50	0,20	22,22 x 2,62	OR 22,22x2,62-N70	STR 19-118/395A
23,00	27,80	3,90	5,50	7,00	0,30	22,20 x 3,00	OR 22,20x3,00-N70	STR 23/18x1,3-Y95A
23,00	28,90	4,50	6,00	7,50	0,40	23,39 x 3,53	OR 23,39x3,53-N70	STR 19-213/395A
24,00	28,20	3,50	5,00	6,50	0,20	23,47 x 2,62	OR 23,47x2,62-N70	STR 19-119/395A
24,00	28,20	3,50	5,00	6,50	0,20	23,81 x 2,62	OR 23,81x2,62-N70	STR 19-119/395A
25,00	29,80	3,90	5,50	7,00	0,30	24,20 x 3,00	OR 24,20x3,00-N70	STR 25/30x1,3-Y95A
25,00	29,20	3,50	5,00	6,50	0,20	25,07 x 2,62	OR 25,07x2,62-N70	STR 19-120/395A
25,00	30,90	4,50	6,00	7,50	0,40	24,99 x 3,53	OR 24,99x3,53-N70	STR 19-214/395A
26,00	31,90	4,50	6,00	7,50	0,40	25,80 x 3,53	OR 25,80x3,53-N70	STR 19-214/395A
27,00	31,80	3,90	5,50	7,00	0,30	26,20 x 3,00	OR 26,20x3,00-N70	STR 27/32x1,3-Y95A
27,00	32,90	4,50	6,00	7,50	0,40	26,58 x 3,53	OR 26,58x3,53-N70	STR 19-215/395A
28,00	32,20	3,50	5,00	6,50	0,20	26,64 x 2,62	OR 26,64x2,62-N70	STR 19-121/395A
28,00	32,20	3,50	5,00	6,50	0,20	28,24 x 2,62	OR 28,24x2,62-N70	STR 122/395A
28,00	33,90	4,50	6,00	7,50	0,40	28,17 x 3,53	OR 28,17x3,53-N70	STR 19-216/395A
30,00	34,80	3,90	5,50	7,00	0,30	29,20 x 3,00	OR 29,20x3,00-N70	STR 30/35x1,3-Y95A
30,00	34,20	3,50	5,00	6,50	0,20	29,82 x 2,62	OR 29,82x2,62-N70	STR 19-123/395A
30,00	35,90	4,50	6,00	7,50	0,40	29,75 x 3,53	OR 29,75x3,53-N70	STR 19-217/395A
31,00	36,90	4,50	6,00	7,50	0,40	31,34 x 3,53	OR 31,31x3,53-N70	STR 19-218/395A
32,00	36,20	3,50	5,00	6,50	0,20	31,42 x 2,62	OR 31,42x2,62-N70	STR 19-124/395A
32,00	34,60	2,50	4,00	5,50	0,20	31,47 x 1,78	OR 31,47x1,78-N70	AF-120-0320034910-1012
33,00	37,80	3,90	5,50	7,00	0,30	32,20 x 3,00	OR 32,20x3,00-N70	STR 33/38x1,3-Y95A
33,00	37,20	3,50	5,00	6,50	0,20	32,99 x 2,62	OR 32,99x2,62-N70	STR 19-125/395A
33,00	38,90	4,50	6,00	7,50	0,40	32,92 x 3,53	OR 32,92x3,53-N70	STR 19-219/395A
35,00	39,80	3,90	5,50	7,00	0,30	34,20 x 3,00	OR 34,20x3,00-N70	STR 35/40x1,3-Y95A
35,00	39,20	3,50	5,00	6,50	0,20	34,59 x 2,62	OR 34,59x2,62-N70	STR 19-126/395A
35,00	40,90	4,50	6,00	7,50	0,40	34,52 x 3,53	OR 34,52-3,53-N70	STR 19-220/395A
36,00	40,20	3,50	5,00	6,50	0,20	36,17 x 2,62	OR 36,17x2,62-N70	STR 19-127/395A
36,00	41,90	4,50	6,00	7,50	0,40	36,10 x 3,53	OR 36,10x3,53-N70	STR 19-221/395A
37,00	41,80	3,90	5,50	7,00	0,30	36,20 x 3,00	OR 36,20x3,00-N70	STR 37/42x1,3-Y95A
38,00	42,20	3,50	5,00	6,50	0,20	37,77 x 2,62	OR 37,77x2,62-N70	STR 19-128/395A
38,00	43,90	4,50	6,00	7,50	0,40	37,70 x 3,53	OR 37,70x3,53-N70	STR 19-222/395A
38,00	47,00	7,00	8,80	11,00	0,50	37,47 x 5,33	OR 37,47x5,33-N70	STR 19-325/395A
38,00	40,60	2,50	4,00	5,50	0,20	37,82 x 1,78	OR 37,82x1,78-N70	AF-120-0380040910-1012
40,00	44,80	3,90	5,50	7,00	0,30	39,20 x 3,00	OR 39,20x3,00-N70	STR 40/45x1,3-Y95A
40,00	49,70	7,30	9,10	11,00	0,50	39,20 x 5,70	OR 39,20x5,70-N70	STR 40/50x1,7-Y95A
40,00	44,20	3,50	5,00	6,50	0,20	39,34 x 2,62	OR 39,34x262-N70	STR 19-129/395A
41,00	45,20	3,50	5,00	6,50	0,20	40,94 x 2,62	OR 40,94x2,62-N70	STR 19-130/395A
41,00	50,00	7,00	8,80	11,00	0,50	40,64 x 5,33	OR 40,64x5,33-N70	STR 19-326/395A
41,00	43,60	2,50	4,00	5,50	0,20	41,00 x 1,78	OR 41,00x1,78-N70	AF-120-0410043910-1012
42,00	47,90	4,50	6,00	7,50	0,40	40,87 x 3,53	OR 40,87x3,53-N70	STR 19-223/395A
42,00	47,90	4,50	6,00	7,50	0,40	41,28 x 3,53	OR 41,28x3,53-N70	STR 19-223/395A

O-Ring

Groove sizes						O-Ring	Part N°.	
d f7	D H9	E ±0,2	E1 ±0,2	E2 ±0,2	R (max)	di x S	O-Ring Part N°.	Back-up ring Part N°.
43,00	47,80	3,90	5,50	7,00	0,30	42,20 x 3,00	OR 42,20x3,00-N70	STR 43/48x1,3-Y95A
43,00	47,20	3,50	5,00	6,50	0,20	42,52 x 2,62	OR 42,52x2,62-N70	STR 19-131/395A
44,00	48,20	3,50	5,00	6,50	0,20	44,12 x 2,62	OR 44,12x2,62-N70	STR 19-132/395A
44,00	53,00	7,00	8,80	11,00	0,50	43,82 x 5,33	OR 43,82x5,33-N70	STR 19-327/395A
45,00	49,80	3,90	5,50	7,00	0,30	44,20 x 3,00	OR 44,20x3,00-N70	STR 45/50x1,3-Y95A
45,00	54,70	7,30	9,10	11,00	0,50	44,20 x 5,70	OR 44,20x5,70-N70	STR 45/55x1,7-Y95A
45,00	50,90	4,50	6,00	7,50	0,40	44,04 x 3,53	OR 44,04x3,53-N70	STR 19-224/395A
45,00	50,90	4,50	6,00	7,50	0,40	44,45 x 3,53	OR 44,45x3,53-N70	STR 19-224/395A
46,00	50,20	3,50	5,00	6,50	0,20	45,69 x 2,62	OR 45,69x2,62-N70	STR 19-133/395A
47,00	56,00	7,00	8,80	11,00	0,50	46,99 x 5,33	OR 46,99x5,33-N70	STR 19-328/395A
48,00	52,20	3,50	5,00	6,50	0,20	47,29 x 2,62	OR 47,29x2,62-N70	STR 19-134/395A
48,00	53,90	4,50	6,00	7,50	0,40	47,22 x 3,53	OR 47,22x3,53-N70	STR 19-225/395A
48,00	53,90	4,50	6,00	7,50	0,40	47,63 x 3,53	OR 47,63x3,53-N70	STR 19-225/395A
49,00	53,20	3,50	5,00	6,50	0,20	48,90 x 2,62	OR 48,90x2,62-N70	STR 19-135/395A
50,00	54,80	3,90	5,50	7,00	0,30	49,50 x 3,00	OR 49,50x3,00-N70	STR 50/55x1,3-Y95A
50,00	59,70	7,30	9,10	11,00	0,50	49,20 x 5,70	OR 49,20x5,70-N70	STR 50/60x1,7-Y95A
50,00	59,00	7,00	8,80	11,00	0,50	50,17 x 5,33	OR 50,17x5,33-N70	STR 19-329/395A
51,00	55,20	3,50	5,00	6,50	0,20	50,47 x 2,62	OR 50,47x2,62-N70	STR 19-136/395A
51,00	56,90	4,50	6,00	7,50	0,40	50,39 x 3,53	OR 50,39x3,53-N70	STR 19-226/395A
51,00	56,90	4,50	6,00	7,50	0,40	50,80 x 3,53	OR 50,80x3,53-N70	STR 19-226/395A
52,00	56,20	3,50	5,00	6,50	0,20	52,07 x 2,62	OR 52,07x2,62-N70	STR 19-137/395A
53,00	62,70	7,30	9,10	11,00	0,50	52,20 x 5,70	OR 52,20x5,70-N70	STR 53/63x1,7-Y95A
53,00	62,00	7,00	8,80	11,00	0,50	53,34 x 5,33	OR 53,34x5,33-N70	STR 19-330/395A
54,00	58,20	3,50	5,00	6,50	0,20	53,64 x 2,62	OR 53,64x2,62-N70	STR 19-138/395A
54,00	59,90	4,50	6,00	7,50	0,40	53,57 x 3,53	OR 53,57x3,53-N70	STR 19-227/395A
55,00	59,80	3,90	5,50	7,00	0,30	54,50 x 3,00	OR 54,50x3,00-N70	STR 55/60x1,3-Y95A
55,00	64,70	7,30	9,10	11,00	0,50	54,20 x 5,70	OR 54,20x5,70-N70	STR 55/65x1,7-Y95A
55,00	59,20	3,50	5,00	6,50	0,20	55,25 x 2,62	OR 55,25x2,62-N70	STR 19-139/395A
57,00	61,20	3,50	5,00	6,50	0,20	56,82 x 2,62	OR 56,86x2,62-N70	STR 19-140/395A
57,00	62,90	4,50	6,00	7,50	0,40	56,70 x 3,53	OR 56,70x3,53-N70	STR 19-228/395A
57,00	66,00	7,00	8,80	11,00	0,50	56,52 x 5,33	OR 56,52x5,33-N70	STR 19-331/395A
58,00	62,80	3,90	5,50	7,00	0,30	57,20 x 3,00	OR 57,20x3,00-N70	STR 58/63x1,3-Y95A
59,00	63,20	3,50	5,00	6,50	0,20	58,42 x 2,62	OR 58,42x2,62-N70	STR 19-141/395A
60,00	64,80	3,90	5,50	7,00	0,30	59,50 x 3,00	OR 59,50x3,00-N70	STR 60/65x1,3-Y95A
60,00	69,70	7,30	9,10	11,00	0,50	59,20 x 5,70	OR 59,20x5,70-N70	STR 60/70x1,7-Y95A
60,00	64,20	3,50	5,00	6,50	0,20	59,99 x 2,62	OR 59,99x2,62-N70	STR 19-142/395A
60,00	65,90	4,50	6,00	7,50	0,40	59,92 x 3,53	OR 59,92x3,53-N70	STR 19-229/395A
60,00	69,00	7,00	8,80	11,00	0,50	59,69 x 5,33	OR 59,69x5,33-N70	STR 19-332/395A
62,00	66,20	3,50	5,00	6,50	0,20	61,60 x 2,62	OR 61,60x2,62-N70	STR 19-143/395A
63,00	67,20	3,50	5,00	6,50	0,20	63,17 x 2,62	OR 63,17x2,62-N70	STR 19-144/395A
63,00	72,00	7,00	8,80	11,00	0,50	62,87 x 5,33	OR 62,87x5,33-N70	STR 19-333/395A
64,00	69,90	4,50	6,00	7,50	0,40	63,09 x 3,53	OR 63,09x3,53-N70	STR 19-230/395A
65,00	69,80	3,90	5,50	7,00	0,30	64,50 x 3,00	OR 64,50x3,00-N70	STR 65/70x1,3-Y95A
65,00	74,70	7,30	9,10	11,00	0,50	64,20 x 5,70	OR 64,20x5,70-N70	STR 65/75x1,7-Y95A
65,00	69,20	3,50	5,00	6,50	0,20	64,77 x 2,62	OR 64,77x2,62-N70	STR 19-145/395A
66,00	75,00	7,00	8,80	11,00	0,50	66,04 x 5,33	OR 66,04x5,33-N70	STR 19-334/395A
67,00	71,20	3,50	5,00	6,50	0,20	66,34 x 2,62	OR 66,34x2,62-N70	STR 19-146/395A
67,00	72,90	4,50	6,00	7,50	0,40	66,27 x 3,53	OR 66,27x3,53-N70	STR 19-231/395A
67,00	72,90	4,50	6,00	7,50	0,40	66,68 x 3,53	OR 66,68x3,53-N70	STR 19-231/395A
68,00	72,20	3,50	5,00	6,50	0,20	67,95 x 2,62	OR 67,95x2,62-N70	STR 19-147/395A
69,00	78,00	7,00	8,80	11,00	0,50	69,22 x 5,33	OR 69,22x5,33-N70	STR 19-335/395A
70,00	74,80	3,90	5,50	7,00	0,30	69,50 x 3,00	OR 69,50x3,00-N70	STR 70/75x1,3-Y95A
70,00	79,70	7,30	9,10	11,00	0,50	69,20 x 5,70	OR 69,20x5,70-N70	STR 70/75x1,7-Y95A
70,00	74,20	3,50	5,00	6,50	0,20	69,52 x 2,62	OR 69,52x2,62-N70	STR 19-148/395A
70,00	75,90	4,50	6,00	7,50	0,40	69,44 x 3,53	OR 69,44x3,53-N70	STR 19-232/395A
70,00	75,90	4,50	6,00	7,50	0,40	69,85 x 3,53	OR 69,85x3,53-N70	STR 19-232/395A
71,00	75,20	3,50	5,00	6,50	0,20	71,12 x 2,62	OR 71,12x2,62-N70	STR 19-149/395A
73,00	78,90	4,50	6,00	7,50	0,40	72,62 x 3,53	OR 72,62x3,53-N70	STR 19-233/395A
73,00	82,00	7,00	8,80	11,00	0,50	72,40 x 5,33	OR 72,40x5,33-N70	STR 19-336/395A

O-Ring

Groove sizes						O-Ring	Part N°.	
d f7	D H9	E ±0,2	E1 ±0,2	E2 ±0,2	R (max)	di x S	O-Ring Part N°.	Back-up ring Part N°.
75,00	79,80	3,90	5,50	7,00	0,30	74,50 x 3,00	OR 74,50x3,00-N70	STR 75/80x1,3-Y95A
75,00	84,70	7,30	9,10	11,00	0,50	74,20 x 5,70	OR 74,20x5,70-N70	STR 75/85x1,7-Y95A
76,00	81,90	4,50	6,00	7,50	0,40	75,79 x 3,53	OR 75,69x3,53-N70	STR 19-234/395A
76,00	85,00	7,00	8,80	11,00	0,50	75,57 x 5,33	OR 75,57x5,33-N70	STR 19-337/395A
79,00	84,90	4,50	6,00	7,50	0,40	78,97 x 3,53	OR 78,97x3,53-N70	STR 19-235/395A
79,00	88,00	7,00	8,80	11,00	0,50	78,74 x 5,33	OR 78,74x5,33-N70	STR 19-338/395A
80,00	84,80	3,90	5,50	7,00	0,30	79,50 x 3,00	OR 79,50x3,00-N70	STR 80/85x1,3-Y95A
80,00	89,70	7,30	9,10	11,00	0,50	79,20 x 5,70	OR 79,20x5,70-N70	STR 80/90x1,7-Y95A
80,00	89,00	7,00	8,80	11,00	0,50	79,77 x 5,33	OR 79,77x5,33-N70	STR 19-620-00-Y95A
82,00	87,90	4,50	6,00	7,50	0,40	82,14 x 3,53	OR 82,14x3,53-N70	STR 19-236-00-Y95A
82,00	91,00	7,00	8,80	11,00	0,50	81,92 x 5,33	OR 81,92x5,33-N70	STR 19-339-00-Y95A
85,00	89,80	3,90	5,50	7,00	0,30	84,50 x 3,00	OR 84,50x3,00-N70	STR 85/90x1,3-Y95A
85,00	94,70	7,30	9,10	11,00	0,50	84,10 x 5,70	OR 84,10x5,70-N70	STR 85/95x1,7-Y95A
85,00	90,90	4,50	6,00	7,50	0,40	85,32 x 3,53	OR 85,32x3,53-N70	STR 19-237/395A
85,00	94,00	7,00	8,80	11,00	0,50	85,09 x 5,33	OR 85,09x5,33-N70	STR 19-340/395A
88,00	97,00	7,00	8,80	11,00	0,50	88,27 x 5,33	OR 88,27x5,33-N70	STR 19-341/395A
89,00	93,20	3,50	5,00	6,50	0,20	88,57 x 2,62	OR 88,57x2,62-N70	STR 19-153/395A
89,00	94,90	4,50	6,00	7,50	0,40	88,49 x 3,53	OR 88,49x3,53-N70	STR 19-238/395A
90,00	94,80	3,90	5,50	7,00	0,30	89,50 x 3,00	OR 89,50x3,00-N70	STR 90/95x1,3-Y95A
90,00	99,70	7,30	9,10	11,00	0,50	89,10 x 5,70	OR 89,10x5,70-N70	STR 90/100x1,7-Y95A
92,00	97,90	4,50	6,00	7,50	0,40	91,67 x 3,53	OR 91,67x3,53-N70	STR 19-239/395A
92,00	101,00	7,00	8,80	11,00	0,50	91,44 x 5,33	OR 91,44x5,33-N70	STR 19-342/395A
95,00	99,80	3,90	5,50	7,00	0,30	94,50 x 3,00	OR 94,50x3,00-N70	STR 95/100x1,3-Y95A
95,00	104,70	7,30	9,10	11,00	0,50	94,10 x 5,70	OR 94,10x5,70-N70	STR 95/105x1,7-Y95A
95,00	99,20	3,50	5,00	6,50	0,20	94,92 x 2,62	OR 94,92x2,62-N70	STR 19-154/395A
95,00	100,90	4,50	6,00	7,50	0,40	94,84 x 3,53	OR 94,84x3,53-N70	STR 19-240/395A
95,00	104,00	7,00	8,80	11,00	0,50	94,62 x 5,33	OR 94,62x5,33-N70	STR 19-343/395A
98,00	103,90	4,50	6,00	7,50	0,40	98,02 x 3,53	OR 98,02x3,53-N70	STR 19-241/395A
98,00	107,00	7,00	8,80	11,00	0,50	97,79 x 5,33	OR 97,79x5,33-N70	STR 19-344/395A
100,00	104,80	3,90	5,50	7,00	0,30	99,50 x 3,00	OR 99,50x3,00-N70	STR 100/105x1,3-Y95A
100,00	109,70	7,30	9,10	11,00	0,50	99,10 x 5,70	OR 99,10x5,70-N70	STR 100/110x1,7-Y95A
101,00	106,90	4,50	6,00	7,50	0,40	101,19 x 3,53	OR 101,16x3,53-N70	STR 19-242/395A
101,00	110,00	7,00	8,80	11,00	0,50	100,97 x 5,33	OR 100,97x5,33-N70	STR 19-345/395A
105,00	109,80	3,90	5,50	7,00	0,30	104,50 x 3,00	OR 104,50x3,00-N70	STR 105/110x1,3-Y95A
105,00	114,70	7,30	9,10	11,00	0,50	104,10 x 5,70	OR 104,10x5,70-N70	STR 105/115x1,7-Y95A
105,00	110,90	4,50	6,00	7,50	0,40	104,37 x 3,53	OR 104,37x3,53-N70	STR 19-243/395A
105,00	114,00	7,00	8,80	11,00	0,50	104,14 x 5,33	OR 104,14x5,33-N70	STR 19-346/395A
107,00	116,00	7,00	8,80	11,00	0,50	107,32 x 5,33	OR 107,32x5,33-N70	STR 19-347/395A
108,00	113,90	4,50	6,00	7,50	0,40	107,54 x 3,53	OR 107,54x3,53-N70	STR 19-244/395A
110,00	114,80	3,90	5,50	7,00	0,30	109,50 x 3,00	OR 109,50x3,00-N70	STR 110/115x1,3-Y95A
110,00	119,70	7,30	9,10	11,00	0,50	109,10 x 5,70	OR 109,10x5,70-N70	STR 110/120x1,7-Y95A
111,00	116,90	4,50	6,00	7,50	0,40	110,72 x 3,53	OR 110,72x3,53-N70	STR 19-245/395A
111,00	120,00	7,00	8,80	11,00	0,50	110,49 x 5,33	OR 110,49x5,33-N70	STR 19-348/395A
114,00	118,20	3,50	5,00	6,50	0,20	113,97 x 2,62	OR 113,97x2,62-N70	STR 19-157/395A
114,00	119,90	4,50	6,00	7,50	0,40	113,90 x 3,53	OR 113,90x3,53-N70	STR 19-246/395A
114,00	123,00	7,00	8,80	11,00	0,50	113,67 x 5,33	OR 113,67x5,33-N70	STR 19-349/395A
114,00	125,80	9,50	12,00	15,00	0,60	113,67 x 6,99	OR 113,67x6,99-N70	STR 19-425/395A
115,00	119,80	3,90	5,50	7,00	0,30	114,50 x 3,00	OR 114,50x3,00-N70	STR 115/120x1,3-Y95A
115,00	124,70	7,30	9,10	11,00	0,50	114,10 x 5,70	OR 114,10x5,70-N70	STR 115/125x1,7-Y95A
115,00	126,80	9,50	12,00	15,00	0,60	114,70 x 6,99	OR 114,70x6,99-N70	AF-120-1150127225-1012
117,00	122,90	4,50	6,00	7,50	0,40	117,07 x 3,53	OR 117,07x3,53-N70	STR 19-247/395A
117,00	126,00	7,00	8,80	11,00	0,50	116,84 x 5,33	OR 116,84x5,33-N70	STR 19-350/395A
117,00	128,80	9,50	12,00	15,00	0,60	116,84 x 6,99	OR 116,84x6,99-N70	STR 19-426/395A
120,00	124,80	3,90	5,50	7,00	0,30	119,50 x 3,00	OR 119,50x3,00-N70	STR 120/125x1,3-Y95A
120,00	129,70	7,30	9,10	11,00	0,50	119,30 x 5,70	OR 119,30x5,70-N70	STR 120/130x1,7-Y95A
120,00	125,90	4,50	6,00	7,50	0,40	120,24 x 3,53	OR 120,24x3,53-N70	STR 19-248/395A
120,00	131,80	9,50	12,00	15,00	0,60	120,02 x 6,99	OR 120,02x6,99-N70	AF-120-1200132225-1012
121,00	130,00	7,00	8,80	11,00	0,50	120,02 x 5,33	OR 120,02x5,33-N70	STR 19-351/395A
121,00	130,00	7,00	8,80	11,00	0,50	120,70 x 5,33	OR 120,70x5,33-N70	STR 19-351/395A

O-Ring

Groove sizes						O-Ring	Part N°.	
d f7	D H9	E ±0,2	E1 ±0,2	E2 ±0,2	R (max)	di x S	O-Ring Part N°.	Back-up ring Part N°.
123,00	128,90	4,50	6,00	7,50	0,40	123,42 x 3,53	OR 123,42x3,53-N70	STR 19-249/395A
123,00	134,80	9,50	12,00	15,00	0,60	123,19 x 6,99	OR 123,19x6,99-N70	STR 19-428/395A
125,00	129,80	3,90	5,50	7,00	0,30	124,50 x 3,00	OR 124,50x3,00-N70	STR 125/130x1,3-Y95A
125,00	134,70	7,30	9,10	11,00	0,50	124,30 x 5,70	OR 124,30x5,70-N70	STR 125/135x1,7-Y95A
126,00	137,80	9,50	12,00	15,00	0,60	126,37 x 6,99	OR 126,37x6,99-N70	STR 19-429/395A
127,00	132,90	4,50	6,00	7,50	0,40	126,60 x 3,53	OR 126,60x3,53-N70	STR 19-250/395A
127,00	136,00	7,00	8,80	11,00	0,50	126,37 x 5,33	OR 126,37x5,33-N70	STR 19-353/395A
127,00	136,00	7,00	8,80	11,00	0,50	127,00 x 5,33	OR 127,00x5,33-N70	STR 19-353/395A
130,00	134,80	3,90	5,50	7,00	0,30	129,50 x 3,00	OR 129,50x3,00-N70	STR 130/135x1,3-Y95A
130,00	139,70	7,30	9,10	11,00	0,50	129,30 x 5,70	OR 129,30x5,70-N70	STR 130/140x1,7-Y95A
130,00	135,90	4,50	6,00	7,50	0,40	129,77 x 3,53	OR 129,77x3,53-N70	STR 19-251/395A
130,00	139,00	7,00	8,80	11,00	0,50	129,54 x 5,33	OR 129,54x5,33-N70	STR 19-354/395A
130,00	139,00	7,00	8,80	11,00	0,50	130,20 x 5,33	OR 130,20x5,33-N70	STR 19-354/395A
130,00	141,80	9,50	12,00	15,00	0,60	129,54 x 6,99	OR 129,54x6,99-N70	AF-120-13001422-1012
133,00	138,90	4,50	6,00	7,50	0,40	132,94 x 3,53	OR 132,94x3,53-N70	STR 19-252/395A
133,00	142,00	7,00	8,80	11,00	0,50	132,72 x 5,33	OR 132,72x5,33-N70	STR 19-355/395A
133,00	144,80	9,50	12,00	15,00	0,60	132,72 x 6,99	OR 132,72x6,99-N70	STR 19-431/395A
135,00	139,80	3,90	5,50	7,00	0,30	134,50 x 3,00	OR 134,50x3,00-N70	STR 135/140x1,3-Y95A
135,00	144,70	7,30	9,10	11,00	0,50	134,30 x 5,70	OR 134,30-5,70xN70	STR 135/145x1,7-Y95A
135,00	146,80	9,50	12,00	15,00	0,60	134,50 x 6,99	OR 134,50x6,99-N70	AF-120-1350147225-1012
136,00	141,90	4,50	6,00	7,50	0,40	136,12 x 3,53	OR 136,12x3,53-N70	STR 19-253/395A
136,00	147,80	9,50	12,00	15,00	0,60	135,80 x 6,99	OR 135,80x6,99-N70	STR 19-432/395A
137,00	146,00	7,00	8,80	11,00	0,50	135,90 x 5,33	OR 135,90x5,33-N70	STR 19-356/395A
137,00	146,00	7,00	8,80	11,00	0,50	136,53 x 5,33	OR 136,53x5,33-N70	STR 19-356/395A
139,00	150,80	9,50	12,00	15,00	0,60	139,07 x 6,99	OR 139,07x6,99-N70	STR 19-433/395A
140,00	144,80	3,90	5,50	7,00	0,30	139,50 x 3,00	OR 139,50x3,00-N70	STR 140/145x1,3-Y95A
140,00	149,70	7,30	9,10	11,00	0,50	139,30 x 5,70	OR 139,30x5,70-N70	STR 140/150x1,7-Y95A
140,00	145,90	4,50	6,00	7,50	0,40	139,30 x 3,53	OR 139,30x3,53-N70	STR 19-254/395A
140,00	149,00	7,00	8,80	11,00	0,50	139,07 x 5,33	OR 139,07x5,33-N70	STR 19-357/395A
140,00	149,00	7,00	8,80	11,00	0,50	139,70 x 5,33	OR 139,70x5,33-N70	STR 19-357/395A
143,00	148,90	4,50	6,00	7,50	0,40	142,47 x 3,53	OR 142,47x3,53-N70	STR 19-255/395A
143,00	152,00	7,00	8,80	11,00	0,50	142,24 x 5,33	OR 142,24x5,33-N70	STR 19-358/395A
143,00	152,00	7,00	8,80	11,00	0,50	142,88 x 5,33	OR 142,88x5,33-N70	STR 19-358/395A
145,00	149,80	3,90	5,50	7,00	0,30	144,50 x 3,00	OR 144,50x3,00-N70	STR 145/150x1,3-Y95A
145,00	154,70	7,30	9,10	11,00	0,50	144,30 x 5,70	OR 144,30-5,70-N70	STR 145/155x1,7-Y95A
145,00	156,80	9,50	12,00	15,00	0,60	145,42 x 6,99	OR 145,42x6,99-N70	STR 19-435/395A
149,00	154,90	4,50	6,00	7,50	0,40	148,82 x 3,53	OR 148,82x3,53-N70	STR 19-257/395A
150,00	159,70	7,30	9,10	11,00	0,50	149,30 x 5,70	OR 149,30x5,70-N70	STR 150/160x1,7-Y95A
150,00	159,00	7,00	8,80	11,00	0,50	148,59 x 5,33	OR 148,59x5,33-N70	STR 19-360/3-Y95A
150,00	159,00	7,00	8,80	11,00	0,50	149,23 x 5,33	OR 149,23x5,33-N70	STR 19-360/3-Y95A
152,00	157,90	4,50	6,00	7,50	0,40	151,99 x 3,53	OR 151,99x3,53-N70	STR 19-258/395A
155,00	164,70	7,30	9,10	11,00	0,50	154,30 x 5,70	OR 154,30x5,70-N70	STR 155/165x1,7-Y95A
158,00	167,00	7,00	8,80	11,00	0,50	158,12 x 5,33	OR 158,12x5,33-N70	STR 19-362/395A
160,00	169,70	7,30	9,10	11,00	0,50	159,30 x 5,70	OR 159,30x5,70-N70	STR 160/170x1,7-Y95A
160,00	171,80	9,50	12,00	15,00	0,60	159,50 x 6,99	OR 159,50x6,99-N70	AF-120-627-00-1012
165,00	174,70	7,30	9,10	11,00	0,50	164,30 x 5,70	OR 164,30x5,70-N70	STR 165/175x1,7-Y95A
165,00	174,00	7,00	8,80	11,00	0,50	164,47 x 5,33	OR 164,47x5,33-N70	STR 19-363/395A
165,00	176,80	9,50	12,00	15,00	0,60	164,47 x 6,99	OR 164,47x6,99-N70	AF-120-16501772025-1012
170,00	179,70	7,30	9,10	11,00	0,50	169,30 x 5,70	OR 169,30x5,70-N70	STR 170/180x1,7-Y95A
170,00	181,80	9,50	12,00	15,00	0,60	170,82 x 6,99	OR 170,82x6,99-N70	AF-120-1700182225-1012
171,00	180,00	7,00	8,80	11,00	0,50	170,82 x 5,33	OR 170,82x5,33-N70	STR 19-364/395A
175,00	184,70	7,30	9,10	11,00	0,50	174,30 x 5,70	OR 174,30x5,70-N70	STR 175/185x1,7-Y95A
175,00	186,80	9,50	12,00	15,00	0,60	174,60 x 6,99	OR 174,60x6,99-N70	AF-120-1750187225-1012
178,00	187,00	7,00	8,80	11,00	0,50	177,17 x 5,33	OR 177,17x5,33-N70	STR 19-365/395A
180,00	189,70	7,30	9,10	11,00	0,50	179,30 x 5,70	OR 179,30x5,70-N70	STR 180/190x1,7-Y95A
184,00	189,90	4,50	6,00	7,50	0,40	183,75 x 3,53	OR 183,75x3,53-N70	STR 19-263/395A
184,00	195,80	9,50	12,00	15,00	0,60	183,52 x 6,99	OR 183,52x6,99-N70	STR 19-442/395A
185,00	194,70	7,30	9,10	11,00	0,50	184,30 x 5,70	OR 184,30x5,70-N70	STR 185/195x1,7-Y95A
190,00	199,70	7,30	9,10	11,00	0,50	189,30 x 5,70	OR 189,30x5,70-N70	STR 190/195x1,7-Y95A

O-Ring

Groove sizes						O-Ring	Part N°.	
d f7	D H9	E ±0,2	E1 ±0,2	E2 ±0,2	R (max)	di x S	O-Ring Part N°.	Back-up ring Part N°.
190,00	199,00	7,00	8,80	11,00	0,50	189,87 x 5,33	OR 189,87x5,33-N70	STR 19-367/395A
190,00	201,80	9,50	12,00	15,00	0,60	189,87 x 6,99	OR 189,87x6,99-N70	STR 19-443/395A
195,00	204,70	7,30	9,10	11,00	0,50	194,30 x 5,70	OR 194,30x5,70-N70	STR 195/195x1,7-Y95A
196,00	205,00	7,00	8,80	11,00	0,50	196,22 x 5,33	OR 196,22x5,33-N70	STR 19-368/395A
196,00	207,80	9,50	12,00	15,00	0,60	196,22 x 6,99	OR 196,22x6,99-N70	STR 19-444/395A
200,00	209,70	7,30	9,10	11,00	0,50	199,30 x 5,70	OR 199,30x5,70-N70	STR 200/210x1,7-Y95A
200,00	211,80	9,50	12,00	15,00	0,60	199,80 x 6,99	OR 199,80x6,99-N70	AF-120-2000212225-1012
203,00	208,90	4,50	6,00	7,50	0,40	202,80 x 3,53	OR 202,80x3,53-N70	STR 19-266/395A
209,00	218,00	7,00	8,80	11,00	0,50	208,92 x 5,33	OR 208,92x5,33-N70	STR 19-370/395A
210,00	219,70	7,30	9,10	11,00	0,50	209,30 x 5,70	OR 209,30x5,70-N70	STR 210/220x1,7Y95A
210,00	221,80	9,50	12,00	15,00	0,60	208,92 x 6,99	OR 208,92x6,99-N70	AF-120-2100222225-1012
215,00	226,80	9,50	12,00	15,00	0,60	215,27 x 6,99	OR 215,27x6,99-N70	STR 19-446/395A
220,00	229,70	7,30	9,10	11,00	0,50	219,30 x 5,70	OR 219,30x5,70-N70	STR 220/230x1,7-Y95A
222,00	231,00	7,00	8,80	11,00	0,50	221,62 x 5,33	OR 221,62x5,33-N70	STR 19-372/395A
228,00	237,00	7,00	8,80	11,00	0,50	227,97 x 5,33	OR 227,97x5,33-N70	STR 19-373/395A
230,00	239,70	7,30	9,10	11,00	0,50	229,30 x 5,70	OR 229,30x5,70-N70	STR 230/240x1,7-Y95A
230,00	241,80	9,50	12,00	15,00	0,60	227,97 x 6,99	OR 227,97x6,99-N70	STR 19-447/395A
240,00	249,70	7,30	9,10	11,00	0,50	239,30 x 5,70	OR 239,30x5,70-N70	STR 240/250x1,7-Y95A
240,00	251,80	9,50	12,00	15,00	0,60	240,67 x 6,99	OR 240,67x6,99-N70	AF-120-2400252225-1012
250,00	259,70	7,30	9,10	11,00	0,50	249,30 x 5,70	OR 249,30x5,70-N70	STR 250/260x1,7-Y95A
255,00	266,80	9,50	12,00	15,00	0,60	253,57 x 6,99	OR 253,57x6,99-N70	AF-120-2550267225-1012
260,00	271,80	9,50	12,00	15,00	0,60	259,70 x 6,99	OR 259,70x6,99-N70	AF-120-2600272225-1012
260,00	269,70	7,30	9,10	11,00	0,50	259,30 x 5,70	OR 259,30x5,70-N70	AF-120-2600270017-1012
265,00	276,80	9,50	12,00	15,00	0,60	266,07 x 6,99	OR 266,07x6,99-N70	AF-120-2650277225-1012
270,00	279,70	7,30	9,10	11,00	0,50	269,30 x 5,70	OR 269,30x5,70-N70	STR 270/280x1,7-Y95A
280,00	291,80	9,50	12,00	15,00	0,60	278,77 x 6,99	OR 278,77x6,99-N70	AF-120-2800292225-1012
280,00	289,70	7,30	9,10	11,00	0,50	279,30 x 5,70	OR 279,30x5,70-N70	AF-120-2800290017-1012
285,00	296,80	9,50	12,00	15,00	0,60	285,10 x 6,99	OR 285,10x6,99-N70	AF-120-2850297225-1012
290,00	299,70	7,30	9,10	11,00	0,50	289,30 x 5,70	OR 289,30x5,70-N70	AF-120-2900300017-1012
300,00	311,80	9,50	12,00	15,00	0,60	297,80 x 6,99	OR 297,80x6,99-N70	AF-120-3000312225-1012
300,00	309,70	7,30	9,10	11,00	0,50	299,30 x 5,70	OR 299,30x5,70-N70	AF-120-3000310017-1012

Example for ordering O-Ring AS 568A:

OR 50,47 x 2,62 - N70

Profile
Nominal ID diameter
Cross-section
Standard material

Example for ordering O-Ring metric:

OR - 74,50 x 3,0 - N70

Type
Nominal ID diameter
Cross-section
Standard material

Example for ordering Back-up Ring metric:

STR 110 / 115 x 1,3 - Y95A

Type, endless
Nominal ID diameter
Nominal OD diameter
Width
Standard material

Example for ordering Back-up Ring AS:

AF-120-1250137225 - 1012

Type, endless
Nominal diameter x 10
Nominal diameter x 10
Width x 10
Standard material

Material Key:

O-Ring

N70	- NBR	70 Shore A
N80	- NBR	80 Shore A
N90	- NBR	90 Shore A
F70	- FPM	70 Shore A
F80	- FPM	80 Shore A
E70	- EPDM	70 Shore A
S70	- Silicone	70 Shore A

Material Key:

Back-up ring PTFE design
AF-120 (endless/solid)
AF-100 (spiral)
AF-110 (30 degree split)
AF-150 (concave endless/solid)
AF-140 (concave split)

Material for Back-up rings
PU - Polyurethane Y95A or 395A
Material made from order
AF-1012 - PTFE virgin
AF-4115 - PTFE glass filled
AF-2426 - PTFE carbon
AF-5640 - PTFE bronze

WARNING: Limits of application stated herein are standard values. They could be individually transgressed with due consideration to respective service conditions. In the event of a large duty cycle, pulsating operation and other complex operational conditions, simultaneous transgression of these values is not recommended. Due to a large variety of service conditions that may arise in course of actual use, the company does not take responsibility of or guarantee the functional accuracy of the individual components. Rights for changes are reserved.

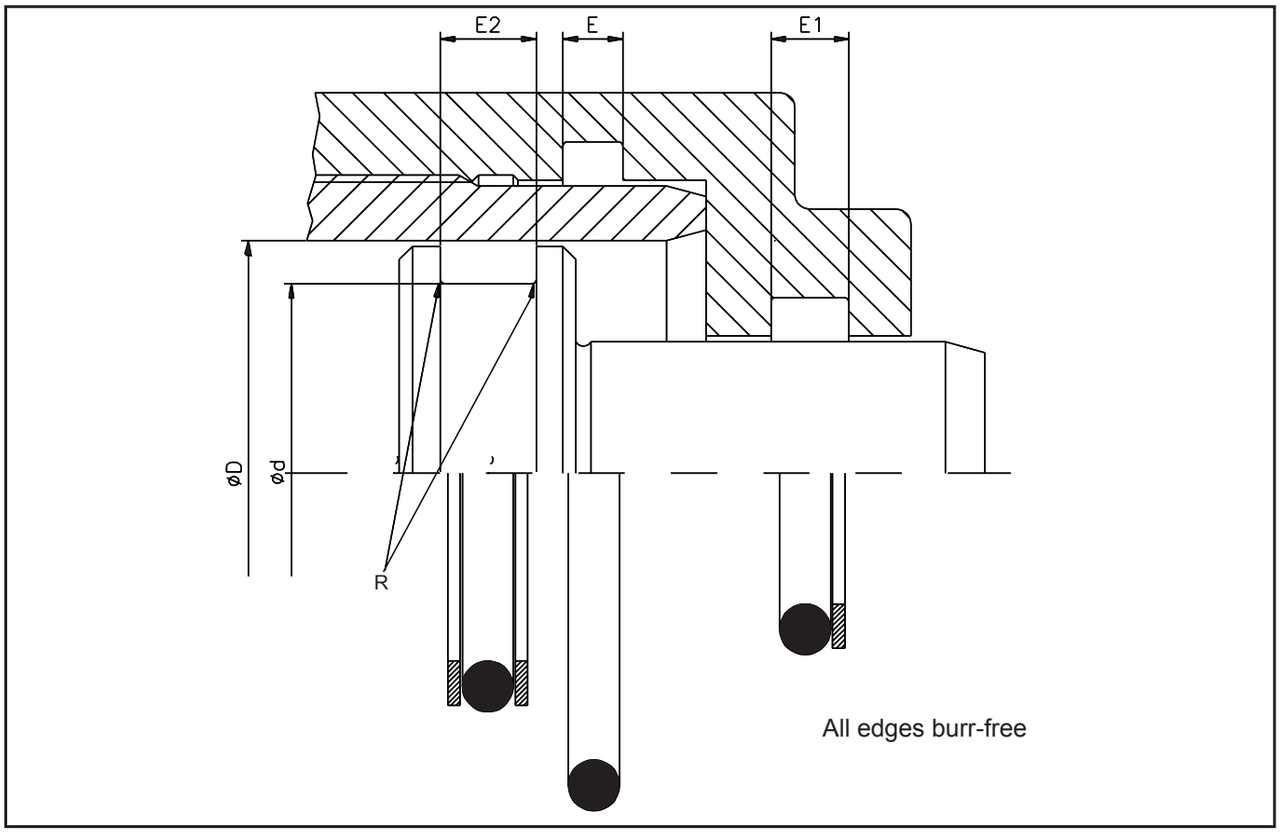

Groove sizes for dynamic external sealing applications

Groove sizes						O-Ring	Part N°.	
D H8	d h9	E ±0,2	E1 ±0,2	E2 ±0,2	R (max)	di x S	O-Ring Part N°.	Back up- ring Part N°.
8,00	4,00	3,20	4,70	6,20	0,20	3,30 x 2,40	OR 3,30x2,40-N70	STR 4/8x1,3-Y95A
9,00	5,00	3,20	4,70	6,20	0,20	4,30 x 2,40	OR 4,30x2,40-N70	STR 5/9x1,3-Y95A
10,00	6,00	3,20	4,70	6,20	0,20	5,30 x 2,40	OR 5,30x2,40-N70	STR 6/10x1,3-Y95A
11,00	7,00	3,20	4,70	6,20	0,20	6,30 x 2,40	OR 6,3x2,40-N70	STR 7/11x1,3-Y95A
12,00	8,00	3,20	4,70	6,20	0,20	7,30 x 2,40	OR 7,30x2,40-N70	STR 8/12x1,3-Y95A
13,00	9,00	3,20	4,70	6,20	0,20	8,30 x 2,40	OR 8,30x2,40-N70	STR 9/13x1,3-Y95A
14,00	10,00	3,20	4,70	6,20	0,20	9,30 x 2,40	OR 9,30x2,40-N70	STR 10/14x1,3-Y95A
15,00	11,00	3,20	4,70	6,20	0,20	10,30 x 2,40	OR 10,30x2,40-N70	STR 11/15x1,3-Y95A
16,00	12,00	3,20	4,70	6,20	0,20	11,30 x 2,40	OR 11,30x2,40-N70	STR 12/16x1,3-Y95A
16,00	11,50	3,50	5,00	6,50	0,20	10,78 x 2,62	OR 10,78x2,62-N70	STR 19-111/395A
17,00	13,00	3,20	4,70	6,20	0,20	12,30 x 2,40	OR 12,30x2,40-N70	STR 13/17x1,3-Y95A
18,00	14,00	3,20	4,70	6,20	0,20	13,30 x 2,40	OR 13,30x2,40-N70	STR 14/18x1,3-Y95A
18,50	14,00	3,50	5,00	6,50	0,20	13,95 x 2,62	OR 13,95x2,62-N70	STR 19-113/395A
19,00	15,00	3,20	4,70	6,20	0,20	14,30 x 2,40	OR 14,30x2,40-N70	STR 15/19x1,3-Y95A
19,00	14,50	3,50	5,00	6,50	0,20	13,95 x 2,62	OR 13,95x2,62-N70	STR 19-113/395A
20,00	16,00	3,20	4,70	6,20	0,20	15,30 x 2,40	OR 15,30x2,40-N70	STR 16/20x1,3-Y95A
21,00	17,00	3,20	4,70	6,20	0,20	16,30 x 2,40	OR 16,30x2,40-N70	STR 17/21x1,3-Y95A
22,00	18,00	3,20	4,70	6,20	0,20	17,30x2,40	OR 17,30x2,40-N70	STR 18/22x1,3-Y95A
22,00	17,50	3,50	5,00	6,50	0,20	17,13x2,62	OR 17,13x2,62-N70	STR 19-115/395A
24,00	19,50	3,50	5,00	6,50	0,20	18,72x2,62	OR 18,72x2,62-N70	STR 19-116/395A
25,00	20,00	3,90	5,50	7,00	0,30	19,20x3,00	OR 19,20x3,00-N70	STR 20/25x1,3-Y95A

O-Ring

Groove sizes						O-Ring	Part N°.	
D H8	d h9	E ±0,2	E1 ±0,2	E2 ±0,2	R (max)	di x S	O-Ring Part N°.	Back-up ring Part N°.
22,00	18,00	3,20	4,70	6,20	0,20	17,30 x 2,40	OR 17,30x2,40-N70	STR 18/22x1,3-Y95A
22,00	17,50	3,50	5,00	6,50	0,20	17,13 x 2,62	OR 17,13x2,62-N70	STR 19-115/395A
24,00	19,50	3,50	5,00	6,50	0,20	18,72 x 2,62	OR 18,72x2,62-N70	STR 19-116/395A
25,00	20,00	3,90	5,50	7,00	0,30	19,20 x 3,00	OR 19,20x3,00-N70	STR 20/25x1,3-Y95A
25,00	20,50	3,50	5,00	6,50	0,20	20,29 x 2,62	OR 20,29x2,62N70	STR 19-117/395A
27,00	22,50	3,50	5,00	6,50	0,20	21,89 x 2,62	OR 21,89x2,62-N70	STR 19-118/395A
27,00	22,50	3,50	5,00	6,50	0,20	22,22 x 2,62	OR 22,22x2,62-N70	STR 19-118/395A
28,00	23,00	3,90	5,50	7,00	0,30	22,20 x 3,00	OR 22,20x3,00-N70	STR 23/28x1,3-Y95A
29,00	22,90	4,50	6,00	7,50	0,40	21,82 x 3,53	OR 21,82x3,53-N70	STR 19- 212/395A
30,00	25,00	3,90	5,50	7,00	0,30	24,20 x 3,00	OR 24,20x3,00-N70	STR 25/30x1,3-Y95A
30,00	25,50	3,50	5,00	6,50	0,20	25,07 x 2,62	OR 25,07x2,62-N70	STR 19-120/395A
30,00	23,90	4,50	6,00	7,50	0,40	23,39 x 3,53	OR 23,39x3,53-N70	STR 213/395A
32,00	27,00	3,90	5,50	7,00	0,30	26,20 x 3,00	OR 26,20x3,00-N70	STR 27/32x1,3-Y95A
32,00	27,50	3,50	5,00	6,50	0,20	26,64 x 2,62	OR 26,64x2,62-N70	STR 19-121/395A
32,00	25,90	4,50	6,00	7,50	0,40	24,99 x 3,53	OR 24,99x3,53-N70	STR 19-214/395A
33,00	28,50	3,50	5,00	6,50	0,20	28,24 x 2,62	OR 28,24x2,62-N70	STR 19-122/395A
35,00	30,00	3,90	5,50	7,00	0,30	29,20 x 3,00	OR 29,20x3,00-N70	STR 30/35x1,3-Y95A
35,00	30,50	3,50	5,00	6,50	0,20	29,82 x 2,62	OR 29,82x2,62-N70	STR 19-123/395A
35,00	28,90	4,50	6,00	7,50	0,40	28,17 x 3,53	OR 27,17x3,53-N70	STR 19-216/395A
37,00	32,50	3,50	5,00	6,50	0,20	31,42 x 2,62	OR 31,42x2,62-N70	STR 19-124/395A
37,00	30,90	4,50	6,00	7,50	0,40	29,75 x 3,53	OR 29,75x3,53-N70	STR 19-217/395A
38,00	33,00	3,90	5,50	7,00	0,30	32,20 x 3,00	OR 32,20x3,00-N70	STR 33/38x1,3-Y95A
38,00	33,50	3,50	5,00	6,50	0,20	32,99 x 2,62	OR 32,99x2,62-N70	STR 19-125/395A
38,00	31,90	4,50	6,00	7,50	0,40	31,34 x 3,53	OR 31,34x3,53-N70	STR 19-218/395A
40,00	35,00	3,90	5,50	7,00	0,30	34,20 x 3,00	OR 34,20x3,00-N70	STR 35/40x1,3-Y95A
40,00	35,50	3,50	5,00	6,50	0,20	34,59 x 2,62	OR 34,59x2,62-N70	STR 19-126/395A
40,00	33,90	4,50	6,00	7,50	0,40	32,92 x 3,53	OR 32,92x3,53-N70	STR 19-219/395A
41,00	36,50	3,50	5,00	6,50	0,20	36,17 x 2,62	OR 36,17x2,62-N70	STR 19-127/395A
42,00	37,00	3,90	5,50	7,00	0,30	36,20 x 3,00	OR 36,20x3,00-N70	STR 37/42x1,3-Y95A
42,00	35,90	4,50	6,00	7,50	0,40	34,52 x 3,53	OR 34,52x3,53-N70	STR 19-220/395A
43,00	38,50	3,50	5,00	6,50	0,20	37,77 x 2,62	OR 37,77x2,62-N70	STR 19-128/395A
43,00	36,90	4,50	6,00	7,50	0,40	36,10 x 3,53	OR 36,10x3,53-N70	STR 19-221/395A
45,00	40,00	3,90	5,50	7,00	0,30	39,20 x 3,00	OR 39,20x3,00-N70	STR 40/45x1,3-Y95A
45,00	40,50	3,50	5,00	6,50	0,20	39,34 x 2,62	OR 39,34x2,62-N70	STR 19-129/395A
45,00	38,90	4,50	6,00	7,50	0,40	37,70 x 3,53	OR 37,70x3,53-N70	STR 19-222/395A
48,00	43,00	3,90	5,50	7,00	0,30	42,20 x 3,00	OR 42,20x3,00-N70	STR 43/48x1,3-Y95A
48,00	38,60	7,00	8,80	11,00	0,50	37,47 x 5,33	OR 37,47x5,33-N70	STR 19-325/395A
50,00	40,00	7,30	9,10	11,00	0,50	39,20 x 5,70	OR 39,20x5,70-N70	STR 43/53x1,7-Y95A
50,00	45,00	3,90	5,50	7,00	0,30	44,20 x 3,00	OR 44,20x3,00-N70	STR 45/50x1,3-Y95A
52,00	42,60	7,00	8,80	11,00	0,50	40,64 x 5,33	OR 40,64x5,33-N70	STR 19-326/395A
54,00	47,90	4,50	6,00	7,50	0,40	47,22 x 3,53	OR 47,22x3,53-N70	STR 19-225/395A
55,00	45,00	7,30	9,10	11,00	0,50	44,20 x 5,70	OR 44,20x5,70-N70	STR 45/55x1,7-Y95A
55,00	50,00	3,90	5,50	7,00	0,30	49,50 x 3,00	OR 49,50x3,00-N70	STR 50/55x1,3-Y95A
55,00	45,60	7,00	8,80	11,00	0,50	43,82 x 5,33	OR 43,82x5,33-N70	STR 19-327/395A
58,00	51,90	4,50	6,00	7,50	0,40	50,39 x 3,53	OR 50,39x3,53-N70	STR 19-226/395A
58,00	48,60	7,00	8,80	11,00	0,50	46,99 x 5,33	OR 46,99x5,33-N70	STR 19-328/395A
59,00	54,50	3,50	5,00	6,50	0,20	53,64 x 2,62	OR 53,64x2,62-N70	STR 19-138/395A
60,00	50,00	7,30	9,10	11,00	0,50	49,20 x 5,70	OR 49,20x5,70-N70	STR 50/60x1,7-Y95A
60,00	55,00	3,90	5,50	7,00	0,30	54,50 x 3,00	OR 54,50x3,00-N70	STR 55/60x1,3-Y95A
61,00	54,90	4,50	6,00	7,50	0,40	53,57 x 3,53	OR 53,57x3,53-N70	STR 19-227/395A
61,00	51,60	7,00	8,80	11,00	0,50	50,17 x 5,33	OR 50,17x5,33-N70	STR 19-329/395A
63,00	53,00	7,30	9,10	11,00	0,50	52,20 x 5,70	OR 52,20x5,70-N70	STR 53/63x1,7-Y95A
63,00	58,00	3,90	5,50	7,00	0,30	57,20 x 3,00	OR 57,20x3,00-N70	STR 58/63x1,3-Y95A
64,00	57,90	4,50	6,00	7,50	0,40	56,70 x 3,53	OR 56,70x3,53-N70	STR 19-228/395A
64,00	54,60	7,00	8,80	11,00	0,50	53,34 x 5,33	OR 53,34x5,33-N70	STR 19-330/395A
65,00	55,00	7,30	9,10	11,00	0,50	54,20 x 5,70	OR 54,20x5,70-N70	STR 55/65x1,7-Y95A
65,00	60,00	3,90	5,50	7,00	0,30	59,50 x 3,00	OR 59,50x3,00-N70	STR 60/65x1,3-Y95A
67,00	60,90	4,50	6,00	7,50	0,40	59,92 x 3,53	OR 59,92x3,53-N70	STR 19-229/395A
68,00	58,60	7,00	8,80	11,00	0,50	56,52 x 5,33	OR 56,52x5,33-N70	STR 19-331/395A

O-Ring

Groove sizes						O-Ring	Part N°.	
D H8	d h9	E ±0,2	E1 ±0,2	E2 ±0,2	R (max)	di x S	O-Ring Part N°.	Back-up ring Part N°.
70,00	60,00	7,30	9,10	11,00	0,50	59,20 x 5,70	OR 59,20x5,70-N70	STR 60/70x1,7-Y95A
70,00	63,90	4,50	6,00	7,50	0,40	63,09 x 3,53	OR 63,09x3,53-N70	STR 19-230/395A
70,00	60,60	7,00	8,80	11,00	0,50	59,69 x 5,33	OR 59,69x5,33-N70	STR 19-332/395A
73,00	66,90	4,50	6,00	7,50	0,40	66,27 x 3,53	OR 66,27x3,53-N70	STR 19-231/395A
73,00	63,60	7,00	8,80	11,00	0,50	62,87 x 5,33	OR 62,87x5,33-N70	STR 19-333/395A
75,00	65,00	7,30	9,10	11,00	0,50	64,20 x 5,70	OR 64,20x5,70-N70	STR 65/75x1,7-Y95A
77,00	70,90	4,50	6,00	7,50	0,40	69,44 x 3,53	OR 69,44x3,53-N70	STR 19-232/395A
77,00	67,60	7,00	8,80	11,00	0,50	66,04 x 5,33	OR 66,04x5,33-N70	STR 19-334/395A
80,00	70,00	7,30	9,10	11,00	0,50	69,20 x 5,70	OR 69,20x5,70-N70	STR 70/80x1,7-Y95A
80,00	70,60	7,00	8,80	11,00	0,50	69,22 x 5,33	OR 69,22x5,33-N70	STR 19-335/395A
85,00	75,00	7,30	9,10	11,00	0,50	74,20 x 5,70	OR 74,20x5,70-N70	STR 75/85x1,7-Y95A
86,00	76,60	7,00	8,80	11,00	0,50	75,57 x 5,33	OR 75,57x5,33-N70	STR 19-337/395A
90,00	80,00	7,30	9,10	11,00	0,50	79,20 x 5,70	OR 79,20x5,70-N70	STR 80/90x1,7-Y95A
90,00	80,60	7,00	8,80	11,00	0,50	78,74 x 5,33	OR 78,74x5,33-N70	STR 19-338/395A
92,00	85,90	4,50	6,00	7,50	0,40	85,32 x 3,53	OR 85,32x3,53-N70	STR 19-237/395A
92,00	82,60	7,00	8,80	11,00	0,50	81,92 x 5,33	OR 81,92x5,33-N70	STR 19-339/395A
95,00	85,00	7,30	9,10	11,00	0,50	84,10 x 5,70	OR 84,10x5,70-N70	STR 85/95x1,7-Y95A
95,00	85,60	7,00	8,80	11,00	0,50	85,09 x 5,33	OR 85,09x5,33-N70	STR 19-340/395A
98,00	88,60	7,00	8,80	11,00	0,50	88,27 x 5,33	OR 88,27x5,33-N70	STR 19-341/395A
99,00	92,90	4,50	6,00	7,50	0,40	91,67 x 3,53	OR 91,67x3,53-N70	STR 19-239/395A
100,00	90,00	7,30	9,10	11,00	0,50	89,10 x 5,70	OR 89,10x5,70-N70	STR 90/100x1,7-Y95A
102,00	92,60	7,00	8,80	11,00	0,50	91,44 x 5,33	OR 91,44x5,33-N70	STR 19-342/395A
105,00	95,00	7,30	9,10	11,00	0,50	94,10 x 5,70	OR 94,10x5,70-N70	STR 95/105x1,7-Y95A
105,00	95,60	7,00	8,80	11,00	0,50	94,62 x 5,33	OR 94,62x5,33-N70	STR 19-343/395A
108,00	98,60	7,00	8,80	11,00	0,50	97,79 x 5,33	OR 97,79x5,33-N70	STR 19-344/395A
110,00	100,00	7,30	9,10	11,00	0,50	99,10 x 5,70	OR 99,10x5,70-N70	STR 100/110x1,7-Y95A
111,00	101,60	7,00	8,80	11,00	0,50	100,97 x 5,33	OR 100,97x5,33-N70	STR 19-345/395A
115,00	105,00	7,30	9,10	11,00	0,50	104,10 x 5,70	OR 104,10x5,70-N70	STR 105/115x1,7-Y95A
115,00	105,60	7,00	8,80	11,00	0,50	104,14 x 5,33	OR 104,14x5,33-N70	STR 19-346/395A
118,00	108,60	7,00	8,80	11,00	0,50	107,32 x 5,33	OR 107,32x5,33-N70	STR 19-347/395A
120,00	110,00	7,30	9,10	11,00	0,50	109,10 x 5,70	OR 109,10x5,70-N70	STR 110/120x1,7-Y95A
121,00	111,60	7,00	8,80	11,00	0,50	110,49 x 5,33	OR 110,49x5,33-N70	STR 19-348/395A
125,00	115,00	7,30	9,10	11,00	0,50	114,10 x 5,70	OR 114,10x5,70-N70	STR 115/125x1,7-Y95A
125,00	115,60	7,00	8,80	11,00	0,50	113,67 x 5,33	OR 113,67x5,33-N70	STR 19-349/395A
127,00	114,80	9,50	12,00	15,00	0,60	113,67 x 6,99	OR 113,67x6,99-N70	STR 19-425/395A
128,00	118,60	7,00	8,80	11,00	0,50	116,84 x 5,33	OR 116,84x5,33-N70	STR 19-350/395A
128,00	118,60	7,00	8,80	11,00	0,50	117,48 x 5,33	OR 117,48x5,33-N70	STR 19-350/395A
130,00	120,00	7,30	9,10	11,00	0,50	119,30 x 5,70	OR 119,30x5,70-N70	STR 120/130x1,7-Y95A
130,00	117,90	9,50	12,00	15,00	0,60	116,84 x 6,99	OR 116,84x6,99-N70	STR 19-426/395A
132,00	122,60	7,00	8,80	11,00	0,50	120,02 x 5,33	OR 120,02x5,33-N70	STR 19-351/395A
132,00	122,60	7,00	8,80	11,00	0,50	120,70 x 5,33	OR 120,70x5,33-N70	STR 19-351/395A
135,00	125,00	7,30	9,10	11,00	0,50	124,30 x 5,70	OR 124,30x5,70-N70	STR 125/135x1,7-Y95A
135,00	122,90	9,50	12,00	15,00	0,60	120,02 x 6,99	OR 120,02x6,99-N70	AF-110-1228135025-1012
137,00	127,60	7,00	8,80	11,00	0,50	126,37 x 5,33	OR 126,37x5,33-N70	STR 19-353/395A
137,00	124,90	9,50	12,00	15,00	0,60	123,19 x 6,99	OR 123,19x6,99-N70	STR 19-428/395A
140,00	130,00	7,30	9,10	11,00	0,50	129,30 x 5,70	OR 129,30x5,70-N70	STR 130/140x1,7-Y95A
140,00	130,60	7,00	8,80	11,00	0,50	129,54 x 5,33	OR 129,54x5,33-N70	STR 19-354/395A
140,00	127,90	9,50	12,00	15,00	0,60	126,37 x 6,99	OR 126,37x6,99-N70	STR 19-429/395A
140,00	130,60	7,00	8,80	11,00	0,50	130,20 x 5,33	OR 130,20x5,33-N70	STR 19-354/395A
143,00	133,60	7,00	8,80	11,00	0,50	132,72 x 5,33	OR 132,72x5,33-N70	STR 19-355/395A
145,00	135,00	7,30	9,10	11,00	0,50	134,30 x 5,70	OR 134,30x5,70-N70	STR 135/145x1,7-Y95A
146,00	133,90	9,50	12,00	15,00	0,60	132,72 x 6,99	OR 132,72x6,99-N70	STR 19-431/395A
147,00	137,60	7,00	8,80	11,00	0,50	135,90 x 5,33	OR 135,90x5,33-N70	STR 19-356/395A
147,00	137,60	7,00	8,80	11,00	0,50	136,53 x 5,33	OR 136,53x5,33-N70	STR 19-356/395A
150,00	140,00	7,30	9,10	11,00	0,50	139,30 x 5,70	OR 139,30x5,70-N70	STR 140/150x1,7-Y95A
150,00	140,60	7,00	8,80	11,00	0,50	139,07 x 5,33	OR 139,07x5,33-N70	STR 19-357/395A
150,00	137,90	9,50	12,00	15,00	0,60	135,80 x 6,99	OR 135,80x6,99-N70	STR 19-432/395A
150,00	140,60	7,00	8,80	11,00	0,50	139,70 x 5,33	OR 139,70x5,33-N70	STR 19-867/395A
153,00	143,60	7,00	8,80	11,00	0,50	142,24 x 5,33	OR 142,24x5,33-N70	STR 19-357/395A

O-Ring

Groove sizes						O-Ring	Part N°.	
D H8	d h9	E ±0,2	E1 ±0,2	E2 ±0,2	R (max)	di x S	O-Ring Part N°.	Back-up ring Part N°.
153,00	140,90	9,50	12,00	15,00	0,60	139,07 x 6,99	OR 139,07x6,99-N70	STR 19-433/395A
153,00	143,60	7,00	8,80	11,00	0,50	142,88 x 5,33	OR 142,88x5,33-N70	STR 19-868/395A
155,00	145,00	7,30	9,10	11,00	0,50	144,30 x 5,70	OR 144,30x5,70-N70	STR 145/155x1,7-Y95A
160,00	150,00	7,30	9,10	11,00	0,50	149,30 x 5,70	OR 149,30x5,70-N70	STR 150/160x1,7-Y95A
160,00	150,60	7,00	8,80	11,00	0,50	148,59 x 5,33	OR 148,59x5,33-N70	STR 19-360/395A
160,00	147,90	9,50	12,00	15,00	0,60	145,42 x 6,99	OR 145,42x6,99-N70	STR 19-435/395A
160,00	150,60	7,00	8,80	11,00	0,50	149,23 x 5,33	OR 149,23x5,33-N70	STR 19-360/395A
165,00	155,00	7,30	9,10	11,00	0,50	154,30 x 5,70	OR 154,30x5,70-N70	STR 155/165x1,7-Y95A
165,00	152,90	9,50	12,00	15,00	0,60	151,77 x 6,99	OR 151,77x6,99-N70	AF-110-1528165025-1012
169,00	159,60	7,00	8,80	11,00	0,50	158,12 x 5,33	OR 158,12x5,33-N70	STR 19-362/395A
170,00	160,00	7,30	9,10	11,00	0,50	159,30 x 5,70	OR 159,30x5,70-N70	STR 160/170x1,7-Y95A
175,00	165,00	7,30	9,10	11,00	0,50	164,30 x 5,70	OR 164,30x5,70-N70	STR 165/175x1,7-Y95A
175,00	165,60	7,00	8,80	11,00	0,50	164,47 x 5,33	OR 164,47x5,33-N70	STR 19-363/395A
175,00	162,90	9,50	12,00	15,00	0,60	161,90 x 6,99	OR 161,90x6,99-N70	AF-110-1628175025-1012
180,00	170,00	7,30	9,10	11,00	0,50	169,30 x 5,70	OR 1693-57-N70	STR 170/180x1,7-Y95A
182,00	172,60	7,00	8,80	11,00	0,50	170,82 x 5,33	OR 364-00-N70	STR 19-364/395A
185,00	175,00	7,30	9,10	11,00	0,50	174,30 x 5,70	OR 1743-57-N70	STR 175/185x1,7-Y95A
188,00	178,60	7,00	8,80	11,00	0,50	177,17 x 5,33	OR 365-00-N70	STR 19-365/395A
190,00	180,00	7,30	9,10	11,00	0,50	179,30 x 5,70	OR 1793-57-N70	STR 180/190x1,7-Y95A
195,00	185,00	7,30	9,10	11,00	0,50	184,30 x 5,70	OR 1843-57-N70	STR 185/195x1,7-Y95A
195,00	185,60	7,00	8,80	11,00	0,50	183,52 x 5,33	OR 366-00-N70	AF-110-1856195017-1012
197,00	184,90	9,50	12,00	15,00	0,60	183,52 x 6,99	OR 442-00-N70	STR 19-442/395A
200,00	190,00	7,30	9,10	11,00	0,50	189,30 x 5,70	OR 1893-57-N70	STR 190/200x1,7-Y95A
200,00	190,60	7,00	8,80	11,00	0,50	189,87 x 5,33	OR 367-00-N70	STR 19-367/395A
200,00	187,90	9,50	12,00	15,00	0,60	187,30 x 6,99	OR 882-00-N70	AF-110-187820002,5-1012
203,00	190,90	9,50	12,00	15,00	0,60	189,87 x 6,99	OR 443-00-N70	STR 19-443/395A
205,00	195,00	7,30	9,10	11,00	0,50	194,30 x 5,70	OR 1943-57-N70	STR 195/205x1,7-Y95A
207,00	197,60	7,00	8,80	11,00	0,50	196,22 x 5,33	OR 368-00-N70	STR 19-368/395A
210,00	200,00	7,30	9,10	11,00	0,50	199,30 x 5,70	OR 199,30x5,70-N70	STR 200/210x1,7-Y95A
210,00	197,90	9,50	12,00	15,00	0,60	196,22 x 6,99	OR 196,22x6,99-N70	STR 19-444/395A
220,00	210,00	7,30	9,10	11,00	0,50	209,30 x 5,70	OR 209,30x5,70-N70	STR 210/220x1,7-Y95A
220,00	210,60	7,00	8,80	11,00	0,50	208,92x 5,33	OR 208,92x5,33-N70	STR 19-370/395A
230,00	220,00	7,30	9,10	11,00	0,50	219,30 x 5,70	OR 219,30x5,70-N70	STR 220/230x1,7-Y95A
230,00	217,80	9,50	12,00	15,00	0,60	215,27 x 6,99	OR 215,27x6,99-N70	STR 19-446/395A
232,00	222,60	7,00	8,80	11,00	0,50	221,62 x 5,33	OR 221,62x5,33-N70	STR 19-372/395A
235,00	222,80	9,50	12,00	15,00	0,60	221,62 x 6,99	OR 221,62x6,99-N70	AF-110-2228235025-1012
239,00	229,60	7,00	8,80	11,00	0,50	227,97 x 5,33	OR 227,97x5,33-N70	STR 19-373/395A
240,00	230,00	7,30	9,10	11,00	0,50	229,30 x 5,70	OR 229,30x5,70-N70	STR 230/240x1,7-Y95A
242,00	229,80	9,50	12,00	15,00	0,60	227,97x 6,99	OR 227,97x6,99-N70	STR 19-447/395A
245,00	235,60	7,00	8,80	11,00	0,50	234,32 x 5,33	OR 234,32x5,33-N70	AF-110-2356245017-1012
250,00	240,00	7,30	9,10	11,00	0,50	239,30 x 5,70	OR 239,30x5,70-N70	STR 240/250x1,7-Y95A
255,00	242,80	9,50	12,00	15,00	0,60	240,67 x 6,99	OR 240,67x6,99-N70	AF-110-24282550-1012
260,00	250,00	7,30	9,10	11,00	0,50	249,30 x 5,70	OR 249,30x5,70-N70	STR 250/x1,7-Y95A
260,00	247,80	9,50	12,00	15,00	0,60	247,00 x 6,99	OR 247,00x6,99-N70	AF-110-2478260025-1012
265,00	255,60	7,00	8,80	11,00	0,50	253,37 x 5,33	OR 253,37x5,33-N70	AF-110-2556265017-1012
270,00	257,80	9,50	12,00	15,00	0,60	253,57 x 6,99	OR 253,37x6,99-N70	AF-110-2578270025-1012
270,00	260,00	7,30	9,10	11,00	0,50	259,30 x 5,70	OR 259,30x5,70-N70	AF-110-2600270017-1012
275,00	262,80	9,50	12,00	15,00	0,60	259,70 x 6,99	OR 259,70x6,99-N70	AF-110-2628275025-1012
280,00	270,00	7,30	9,10	11,00	0,50	269,30 x 5,70	OR 269,30x5,70-N70	STR 270/280x1,7-Y95A
280,00	267,80	9,50	12,00	15,00	0,60	266,07 x 6,99	OR 266,07x6,99-N70	AF-110-2678280025-1012
286,00	273,80	9,50	12,00	15,00	0,60	272,40 x 6,99	OR 272,40x6,99-N70	STR 19-684/395A
290,00	280,60	7,00	8,80	11,00	0,50	278,77 x 5,33	OR 278,77x5,33-N70	AF-110-2806290017-1012
290,00	280,00	7,30	9,10	11,00	0,50	279,30 x 5,70	OR 279,30x5,70-N70	AF-110-2800290017-1012
295,00	282,80	9,50	12,00	15,00	0,60	278,77 x 6,99	OR 278,77x6,99-N70	AF-110-2828295025-1012
300,00	287,80	9,50	12,00	15,00	0,60	285,10 x 6,99	OR 285,10x6,99-N70	AF-110-2878300025-1012
300,00	290,00	7,30	9,10	11,00	0,50	289,30 x 5,70	OR 289,30x5,70-N70	AF-110-2900300017-1012

O-Ring

Example for ordering O-Ring AS 568A:

OR 71,44 x 3,53 - N70

Type
Nominal ID diameter
Cross-section
Standard material

Example for ordering O-Ring metric:

OR 36,20 x 3,0 - N70

Type
Nominal ID diameter
Cross-section
Standard material

Example for ordering Back-up Ring metric:

STR 200 / 210x1,7 - Y95A

Type
Nomial ID diameter
Nominal OD diameter
Width
Standard material

Example for ordering Back-up Ring AS:

AF-110 - 1878200025 - 1012

Type
Nomial diameter x 10
Nominal diameter x 10
Width x10
Standard material

Material Key:

O-Ring

N70 - NBR 70 Shore A
N80 - NBR 80 Shore A
N90 - NBR 90 Shore A
F70 - FPM 70 Shore A
F80 - FPM 80 Shore A
E70 - EPDM 70 Shore A
S70 - Silicone70 Shore A

Material Key:

Back – up Ring Design (PTFE)
AF-120 (Endless/solid)
AF-100 (Spiral)
AF-110 (30° split)
AF-150 (Concave endless/solid)
AF-140 (Concave split)

Material Key (backup-up Ring):
PU - Polyurethane
AF-1012 - Virgin PTFE
AF-4115 - PTFE with glass fibre
AF-2426 - PFTE with carbon
AF-5640 - PTFE with bronze/additive

WARNING: Limits of application stated herein are standard values. They could be individually transgressed with due consideration to respective service conditions. In the event of a large duty cycle, pulsating operation and other complex operational conditions, simultaneous transgression of these values is not recommended. Due to a large variety of service conditions that may arise in course of actual use, the company does not take responsibility of or guarantee the functional accuracy of the individual components. Rights for changes are reserved.

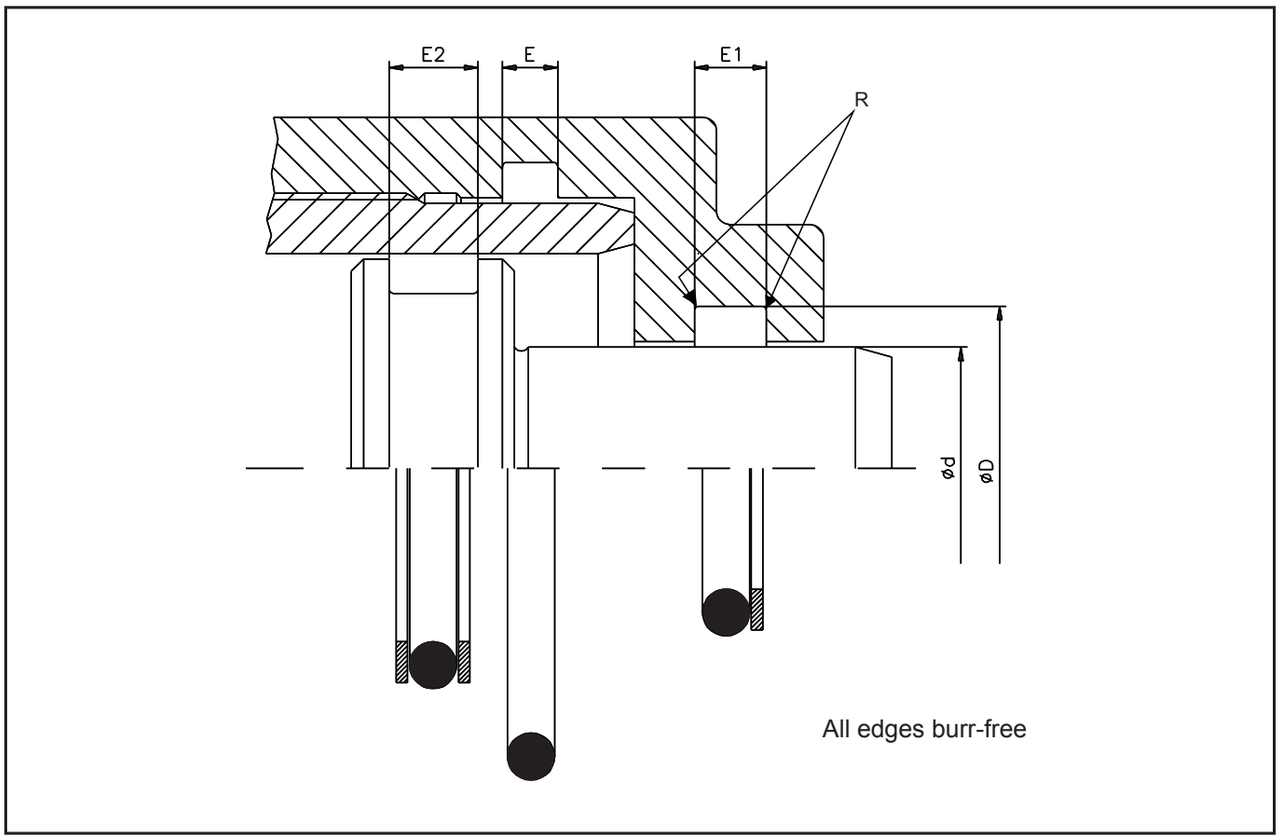

Groove sizes for dynamic internal sealing applications

Groove sizes						O-Ring	Part N°.	
d f7	D H9	E ±0,2	E1 ±0,2	E2 ±0,2	R (max)	di x S	O-Ring Part N°.	Back-up ring Part N°.
6,00	9,00	2,50	4,00	5,50	0,20	6,07 x 1,78	OR 6,07x1,78-N70	STR 19-010/395A
8,00	11,00	2,50	4,00	5,50	0,20	7,66 x 1,78	OR 7,66x1,78-N70	STR 19-011/395A
9,00	13,50	3,50	5,00	6,50	0,20	9,19 x 2,62	OR 9,19x2,62-N70	STR 19-110/395A
11,00	14,00	2,50	4,00	5,50	0,20	10,82 x 1,78	OR 10,82x1,78-N70	STR 19-013/395A
11,00	15,50	3,50	5,00	6,50	0,20	10,78 x 2,62	OR 10,78x2,62-N70	STR 19-111/395A
12,50	17,00	3,50	5,00	6,50	0,20	12,37 x 2,62	OR 12,37x2,62-N70	STR 19-112/395A
14,00	17,00	2,50	4,00	5,50	0,20	14,00 x 1,78	OR 14,00x1,78-N70	STR 19-015/395A
14,00	18,50	3,50	5,00	6,50	0,20	13,95 x 2,62	OR 13,95x2,62-N70	STR 19-113/395A
15,50	20,00	3,50	5,00	6,50	0,20	15,54 x 2,62	OR 15,54x2,62-N70	STR 19-114/395A
17,00	21,50	3,50	5,00	6,50	0,20	17,13 x 2,62	OR 17,13x2,62-N70	STR 19-115/395A
19,00	23,50	3,50	5,00	6,50	0,20	18,72 x 2,62	OR 18,72x2,62-N70	STR 19-116/395A
19,00	25,10	4,50	6,00	7,50	0,40	18,64 x 3,53	OR 18,64x3,53-N70	STR 19-210/395A
20,00	24,50	3,50	5,00	6,50	0,20	20,29 x 2,62	OR 20,29x2,62-N70	STR 19-117/395A
20,00	26,10	4,50	6,00	7,50	0,40	20,22 x 3,53	OR 20,22x3,53-N70	STR 19-211/395A
22,00	26,50	3,50	5,00	6,50	0,20	21,89 x 2,62	OR 21,89x2,62-N70	STR 19-118/395A
22,00	28,10	4,50	6,00	7,50	0,40	21,82 x 3,53	OR 21,82x3,53-N70	STR 19-212/395A
25,00	30,00	3,90	5,50	7,00	0,30	24,20 x 3,00	OR 24,20x3,00-N70	STR 25/30x1,3-Y95A
25,00	29,50	3,50	5,00	6,50	0,20	25,07 x 2,62	OR 25,07x2,62-N70	STR 19-120/395A
25,00	31,10	4,50	6,00	7,50	0,40	24,99 x 3,53	OR 24,99x3,53-N70	STR 19-214/395A
27,00	32,00	3,90	5,50	7,00	0,30	26,20 x 3,00	OR 26,20x3,00-N70	STR 27/32x1,3-Y95A
27,00	33,10	4,50	6,00	7,50	0,40	26,58 x 3,53	OR 26,58x3,53-N70	STR 19-215/395A

O-Ring

Groove sizes						O-Ring	Part N°.	
d f7	D H9	E ±0,2	E1 ±0,2	E2 ±0,2	R (max)	di x S	O-Ring Part N°.	Back-up ring Part N°.
28,00	32,50	3,50	5,00	6,50	0,20	28,24 x 2,62	OR 28,24x2,62-N70	STR 19-122/395A
28,00	34,10	4,50	6,00	7,50	0,40	28,17 x 3,53	OR 28,17x3,53-N70	STR 19-216/395A
30,00	35,00	3,90	5,50	7,00	0,30	29,20 x 3,00	OR 29,20x3,00-N70	STR 30/35x1,3-Y95A
30,00	34,50	3,50	5,00	6,50	0,20	29,82 x 2,62	OR 29,82x2,62-N70	STR 19-123/395A
30,00	36,10	4,50	6,00	7,50	0,40	29,75 x 3,53	OR 29,75x3,53-N70	STR 19-217/395A
31,00	37,10	4,50	6,00	7,50	0,40	31,34 x 3,53	OR 31,34x3,53-N70	STR 19-218/395A
32,00	36,50	3,50	5,00	6,50	0,20	31,42 x 2,62	OR 31,42x2,62-N70	STR 19-124/395A
33,00	38,00	3,90	5,50	7,00	0,30	32,20 x 3,00	OR 32,20x3,00-N70	STR 33/38x1,3-Y95A
33,00	37,50	3,50	5,00	6,50	0,20	32,99 x 2,62	OR 32,99x2,62-N70	STR 19-125/395A
33,00	39,10	4,50	6,00	7,50	0,40	32,92 x 3,53	OR 32,92x3,53-N70	STR 19-219/395A
35,00	40,00	3,90	5,50	7,00	0,30	34,20 x 3,00	OR 34,20x3,00-N70	STR 35/40x1,3-Y95A
35,00	39,50	3,50	5,00	6,50	0,20	34,59 x 2,62	OR 34,59x2,62-N70	STR 19-126/395A
35,00	41,10	4,50	6,00	7,50	0,40	34,52 x 3,53	OR 34,52x3,53-N70	STR 19-220/395A
36,00	40,50	3,50	5,00	6,50	0,20	36,17 x 2,62	OR 36,17x2,62-N70	STR 19-127/395A
36,00	42,10	4,50	6,00	7,50	0,40	36,10 x 3,53	OR 36,10x3,53-N70	STR 19-221/395A
37,00	42,00	3,90	5,50	7,00	0,30	36,20 x 3,00	OR 36,20x3,00-N70	STR 37/42x1,3-Y95A
38,00	42,50	3,50	5,00	6,50	0,20	37,77 x 2,62	OR 137,77x2,62-N70	STR 19-128/395A
38,00	44,10	4,50	6,00	7,50	0,40	37,70 x 3,53	OR 37,70x3,53-N70	STR 19-222/395A
38,00	47,40	7,00	8,80	11,00	0,50	37,47 x 5,33	OR 37,47x5,33-N70	STR 19-325/395A
40,00	45,00	3,90	5,50	7,00	0,30	39,20 x 3,00	OR 39,20x3,00-N70	STR 40/45x1,3-Y95A
40,00	50,00	7,30	9,10	11,00	0,50	39,20 x 5,70	OR 39,20x5,70-N70	STR 40/50x1,7-Y95A
40,00	44,50	3,50	5,00	6,50	0,20	39,34 x 2,62	OR 39,34x2,62-N70	STR 19-129/395A
41,00	45,50	3,50	5,00	6,50	0,20	40,94 x 2,62	OR 40,94x2,62-N70	STR 19-130/395A
41,00	50,40	7,00	8,80	11,00	0,50	40,64 x 5,33	OR 40,64x5,33-N70	STR 19-326/395A
43,00	48,00	3,90	5,50	7,00	0,30	42,20 x 3,00	OR 42,20x3,00-N70	STR 43/48x1,3-Y95A
43,00	47,50	3,50	5,00	6,50	0,20	42,52 x 2,62	OR 42,52x2,62-N70	STR 19-131/395A
44,00	48,50	3,50	5,00	6,50	0,20	44,12 x 2,62	OR 44,12x2,62-N70	STR 19-132/395A
44,00	53,40	7,00	8,80	11,00	0,50	43,82 x 5,33	OR 43,82x5,33-N70	STR 19-327/395A
45,00	50,00	3,90	5,50	7,00	0,30	44,20 x 3,00	OR 44,20x3,00-N70	STR 45/45x1,3-Y95A
45,00	55,00	7,30	9,10	11,00	0,50	44,20 x 5,70	OR 44,20x5,70-N70	STR 45/55x1,7-Y95A
45,00	51,10	4,50	6,00	7,50	0,40	44,04 x 3,53	OR 44,04x3,53-N70	STR 19-224/395A
45,00	51,10	4,50	6,00	7,50	0,40	44,45 x 3,53	OR 44,45x3,53-N70	STR 19-224/395A
47,00	56,40	7,00	8,80	11,00	0,50	46,99 x 5,33	OR 46,99x5,33-N70	STR 19-328/395A
50,00	55,00	3,90	5,50	7,00	0,30	49,50 x 3,00	OR 49,50x3,00-N70	STR 50/55x1,3-Y95A
50,00	60,00	7,30	9,10	11,00	0,50	49,20 x 5,70	OR 49,20x5,70-N70	STR 50/60x1,7-Y95A
50,00	59,40	7,00	8,80	11,00	0,50	50,17 x 5,33	OR 50,17x5,33-N70	STR 19-329/395A
51,00	57,10	4,50	6,00	7,50	0,40	50,39 x 3,53	OR 50,39x3,53-N70	STR 19-226/395A
53,00	63,00	7,30	9,10	11,00	0,50	52,20 x 5,70	OR 52,20x5,70-N70	STR 53/63x1,7-Y95A
53,00	62,40	7,00	8,80	11,00	0,50	53,34 x 3,53	OR 53,34x3,53-N70	STR 19-330/395A
54,00	60,10	4,50	6,00	7,50	0,40	53,57 x 3,53	OR 53,57x3,53-N70	STR 19-227/395A
55,00	60,00	3,90	5,50	7,00	0,30	54,50 x 3,00	OR 54,50x3,00-N70	STR 55/60x1,3-Y95A
55,00	65,00	7,30	9,10	11,00	0,50	54,20 x 5,70	OR 54,20x5,70-N70	STR 55/65x1,7-Y95A
57,00	63,10	4,50	6,00	7,50	0,40	56,70 x 3,53	OR 56,70x3,53-N70	STR 19-228/395A
57,00	66,40	7,00	8,80	11,00	0,50	56,52 x 5,33	OR 56,52x5,33-N70	STR 19-331/395A
58,00	63,00	3,90	5,50	7,00	0,30	57,20 x 3,00	OR 57,20x3,00-N70	STR 58/63x1,3-Y95A
60,00	65,00	3,90	5,50	7,00	0,30	59,50 x 3,00	OR 59,50x3,00-N70	STR 60/65x1,3-Y95A
60,00	70,00	7,30	9,10	11,00	0,50	59,20 x 5,70	OR 59,20x5,70-N70	STR 60/70x1,7-Y95A
60,00	66,10	4,50	6,00	7,50	0,40	59,92 x 3,53	OR 59,92x3,53-N70	STR 19-229/395A
60,00	69,40	7,00	8,80	11,00	0,50	59,69 x 5,33	OR 56,69x5,33-N70	STR 19-332/395A
63,00	72,40	7,00	8,80	11,00	0,50	62,87 x 5,33	OR 62,87x5,33-N70	STR 19-333/395A
65,00	70,00	3,90	5,50	7,00	0,30	64,50 x 3,00	OR 64,50x3,00-N70	STR 65/70x1,3-Y95A
65,00	75,00	7,30	9,10	11,00	0,50	64,20 x 5,70	OR 64,20x5,70-N70	STR 65/75x1,7-Y95A
66,00	75,40	7,00	8,80	11,00	0,50	66,04 x 5,33	OR 66,04x5,33-N70	STR 19-334/395A
68,00	74,10	4,50	6,00	7,50	0,40	68,26 x 3,53	OR 68,26x3,53-N70	STR 19-842/395A
69,00	78,40	7,00	8,80	11,00	0,50	69,22 x 5,33	OR 69,22x5,33-N70	STR 19-335/395A
70,00	75,00	3,90	5,50	7,00	0,30	69,50 x 3,00	OR 69,50x3,00-N70	STR 70/75x1,3-Y95A
70,00	80,00	7,30	9,10	11,00	0,50	69,20 x 5,70	OR 69,20x5,70-N70	STR 70/80x1,7-Y95A
73,00	79,10	4,50	6,00	7,50	0,40	72,62 x 3,53	OR 72,62x3,53-N70	STR 19-233/395A
73,00	82,40	7,00	8,80	11,00	0,50	72,40 x 5,33	OR 72,40x5,33-N70	STR 19-336/395A

O-Ring

Groove sizes						O-Ring	Part N°.	
d f7	D H9	E ±0,2	E1 ±0,2	E2 ±0,2	R (max)	di x S	O-Ring Part N°.	Back-up ring Part N°.
75,00	80,00	3,90	5,50	7,00	0,30	74,50 x 3,00	OR 74,50x3,00-N70	STR 75/80x1,3-Y95A
75,00	85,00	7,30	9,10	11,00	0,50	74,20 x 5,70	OR 74,20x5,70-N70	STR 75/85x1,7-Y95A
76,00	82,10	4,50	6,00	7,50	0,40	75,79 x 3,53	OR 75,79,3,53-N70	STR 19-234/395A
76,00	85,40	7,00	8,80	11,00	0,50	75,57 x 5,33	OR 75,57x5,33-N70	STR 19-337/395A
79,00	85,10	4,50	6,00	7,50	0,40	78,97 x 3,53	OR 78,97x3,53-N70	STR 19-235/395A
79,00	88,40	7,00	8,80	11,00	0,50	78,74 x 5,33	OR 78,74x3,53-N70	STR 19-338/395A
80,00	90,00	7,30	9,10	11,00	0,50	79,20 x 5,70	OR 79,20x5,70-N70	STR 80/90x1,7-Y95A
82,00	91,40	7,00	8,80	11,00	0,50	81,92 x 5,33	OR 81,92x5,33-N70	STR 19-339/395A
85,00	95,00	7,30	9,10	11,00	0,50	84,10 x 5,70	OR 84,10x5,70-N70	STR 85/95x1,7-Y95A
85,00	94,40	7,00	8,80	11,00	0,50	85,09 x 5,33	OR 85,09x5,33-N70	STR 19-340/395A
88,00	97,40	7,00	8,80	11,00	0,50	88,27 x 5,33	OR 88,27x5,33-N70	STR 19-341/395A
90,00	100,00	7,30	9,10	11,00	0,50	89,10 x 5,70	OR 89,10x5,70-N70	STR 90/100x1,7-Y95A
92,00	101,40	7,00	8,80	11,00	0,50	91,44 x 5,33	OR 91,44x5,33-N70	STR 19-342/395A
95,00	105,00	7,30	9,10	11,00	0,50	94,10 x 5,70	OR 94,10x5,70-N70	STR 95/105x1,7-Y95A
95,00	104,40	7,00	8,80	11,00	0,50	94,62 x 5,33	OR 94,62x5,33-N70	STR 19-343/395A
98,00	107,40	7,00	8,80	11,00	0,50	97,79 x 5,33	OR 97,79x5,33-N70	STR 19-344/395A
100,00	110,00	7,30	9,10	11,00	0,50	99,10 x 5,70	OR 99,10x5,70-N70	STR 100/110x1,7-Y95A
101,00	110,40	7,00	8,80	11,00	0,50	100,97 x 5,33	OR 100,97x5,33-N70	STR 19-345/395A
105,00	115,00	7,30	9,10	11,00	0,50	104,10 x 5,70	OR 104,10x5,70-N70	STR 105/115x1,7-Y95A
105,00	114,40	7,00	8,80	11,00	0,50	104,14 x 5,33	OR 104,14x5,33-N70	STR 19-346/395A
107,00	116,40	7,00	8,80	11,00	0,50	107,32 x 5,33	OR 107,32x5,33-N70	STR 19-347/395A
110,00	120,00	7,30	9,10	11,00	0,50	109,10 x 5,70	OR 109,10x5,70-N70	STR 110/120x1,7-Y95A
110,00	119,40	7,00	8,80	11,00	0,50	109,54 x 5,33	OR 109,54x5,33-N70	STR 19-623/395A
111,00	120,40	7,00	8,80	11,00	0,50	110,49 x 5,33	OR 110,49x5,33-N70	STR 19-348/395A
114,00	123,40	7,00	8,80	11,00	0,50	113,67 x 5,33	OR 116,67x5,33-N70	STR 19-349/395A
114,00	126,20	9,50	12,00	15,00	0,60	113,67 x 6,99	OR 113,67x6,99-N70	STR 19-425/395A
115,00	125,00	7,30	9,10	11,00	0,50	114,10 x 5,70	OR 114,10x5,70-N70	STR 115/125x1,7-Y95A
115,00	127,20	9,50	12,00	15,00	0,60	114,70 x 6,99	OR 114,70x6,99-N70	AF-120-1150127225-1012
117,00	126,40	7,00	8,80	11,00	0,50	116,84 x 5,33	OR 116,84x5,33-N70	STR 19-350/395A
117,00	129,20	9,50	12,00	15,00	0,60	116,84 x 6,99	OR 116,84x6,99-N70	STR 19-426/395A
120,00	130,00	7,30	9,10	11,00	0,50	119,30 x 5,70	OR 119,30x5,70-N70	STR 120/x1,7-Y95A
120,00	132,20	9,50	12,00	15,00	0,60	120,02 x 6,99	OR 120,02x6,99-N70	AF-120-1300132225-1012
121,00	130,40	7,00	8,80	11,00	0,50	120,02 x 5,33	OR 120,02x5,33-N70	STR 19-351/395A
121,00	130,40	7,00	8,80	11,00	0,50	120,70 x 5,33	OR 120,70x5,33-N70	STR 19-351/395A
123,00	135,20	9,50	12,00	15,00	0,60	123,19 x 6,99	OR 123,19x6,99-N70	STR 19-428/395A
125,00	135,00	7,30	9,10	11,00	0,50	124,30 x 5,70	OR 124,30x5,70-N70	STR 125/135x1,7-Y95A
125,00	137,20	9,50	12,00	15,00	0,60	124,60 x 6,99	OR 124,60x6,99-N70	AF-120-1250137225-1012
126,00	138,20	9,50	12,00	15,00	0,60	126,37 x 6,99	OR 126,37x6,99-N70	STR 19-429/395A
127,00	133,10	4,50	6,00	7,50	0,40	126,60 x 3,53	OR 126,60x3,53-N70	STR 19-250/395A
127,00	136,40	7,00	8,80	11,00	0,50	126,37 x 5,33	OR 126,37x5,33-N70	STR 19-353/395A
127,00	136,40	7,00	8,80	11,00	0,50	127,00 x 5,33	OR 127,00x5,33-N70	STR 19-353/395A
130,00	140,00	7,30	9,10	11,00	0,50	129,30 x 5,70	OR 129,30x5,70-N70	STR 130/140x1,7-Y95A
130,00	139,40	7,00	8,80	11,00	0,50	129,54 x 5,33	OR 129,54x5,33-N70	STR 19-354/395A
130,00	139,40	7,00	8,80	11,00	0,50	130,20 x 5,33	OR 130,20x5,33-N70	STR 19-354/395A
130,00	142,20	9,50	12,00	15,00	0,60	129,54 x 6,99	OR 129,54x6,99-N70	AF-120-1300142225-1012
133,00	142,40	7,00	8,80	11,00	0,50	132,72 x 5,33	OR 132,72x5,33-N70	STR 19-355/395A
133,00	145,20	9,50	12,00	15,00	0,60	132,72 x 6,99	OR 132,72x6,99-N70	STR 19-431/395A
135,00	145,00	7,30	9,10	11,00	0,50	134,30 x 5,70	OR 134,30x5,70-N70	STR 135/145x1,7-Y95A
135,00	147,20	9,50	12,00	15,00	0,60	134,50 x 6,99	OR 134,50x6,99-N70	AF-120-1350147225-1012
136,00	148,20	9,50	12,00	15,00	0,60	135,80 x 6,99	OR 135,80x6,99-N70	STR 19-432/395A
137,00	146,40	7,00	8,80	11,00	0,50	135,90 x 5,33	OR 135,90x5,33-N70	STR 19-356/395A
137,00	146,40	7,00	8,80	11,00	0,50	136,53 x 5,33	OR 136,53x5,33-N70	STR 19-356/395A
139,00	151,20	9,50	12,00	15,00	0,60	139,07 x 6,99	OR 139,07x6,99-N70	STR 19-433/395A
140,00	150,00	7,30	9,10	11,00	0,50	139,30 x 5,70	OR 139,30x5,70-N70	STR 140/150x1,7-Y95A
140,00	149,40	7,00	8,80	11,00	0,50	139,07 x 5,33	OR 139,07x5,33-N70	STR 19-357/395A
140,00	149,40	7,00	8,80	11,00	0,50	139,70 x 5,33	OR 139,70x5,33-N70	STR 19-357/395A
145,00	157,20	9,50	12,00	15,00	0,60	145,42 x 6,99	OR 145,42x6,99-N70	STR 19-435/395A
150,00	160,00	7,30	9,10	11,00	0,50	149,30 x 5,70	OR 149,30x5,70-N70	STR 150/160x1,7-Y95A
150,00	159,40	7,00	8,80	11,00	0,50	148,59 x 5,33	OR 148,59x5,33-N70	STR 19-360/395A

O-Ring

Groove sizes						O-Ring	Part N°.	
d f7	D H9	E ±0,2	E1 ±0,2	E2 ±0,2	R (max)	di x S	O-Ring Part N°.	Back-up ring Part N°.
150,00	159,40	7,00	8,80	11,00	0,50	149,23 x 5,33	OR 149,23x5,33-N70	STR 19-360/395A
155,00	165,00	7,30	9,10	11,00	0,50	154,30 x 5,70	OR 154,30x5,70-N70	STR 155/165x1,7-Y95A
158,00	167,40	7,00	8,80	11,00	0,50	158,12 x 5,33	OR 158,12x5,33-N70	STR 19-362/395A
160,00	170,00	7,30	9,10	11,00	0,50	159,30 x 5,70	OR 159,30x5,70-N70	STR 160/170x1,7-Y95A
160,00	172,20	9,50	12,00	15,00	0,60	159,50 x 6,99	OR 159,50x6,99-N70	AF-120-1600172225-1012
165,00	175,00	7,30	9,10	11,00	0,50	164,30 x 5,70	OR 164,30x5,70-N70	STR 165/175x1,7-Y95A
165,00	174,40	7,00	8,80	11,00	0,50	164,47 x 5,33	OR 164,47x5,33-N70	STR 19-363/395A
165,00	177,20	9,50	12,00	15,00	0,60	164,47 x 6,99	OR 164,47x6,99-N70	AF-120-1650177225-1012
167,00	179,20	9,50	12,00	15,00	0,60	166,70 x 6,99	OR 166,70x6,99-N70	STR 19-628/395A
170,00	180,00	7,30	9,10	11,00	0,50	169,30 x 5,70	OR 169,30x5,70-N70	STR 170/180x1,7-Y95A
170,00	182,20	9,50	12,00	15,00	0,60	170,82 x 6,99	OR 170,82x6,99-N70	AF-120-1700182225-1012
171,00	180,40	7,00	8,80	11,00	0,50	170,82 x 5,33	OR 170,82x5,33-N70	STR 19-364/395A
175,00	185,00	7,30	9,10	11,00	0,50	174,30 x 5,70	OR 174,30x5,70-N70	STR 175/185x1,7-Y95A
175,00	187,20	9,50	12,00	15,00	0,60	174,60 x 6,99	OR 174,60x6,99-N70	AF-120-1750187225-1012
178,00	187,40	7,00	8,80	11,00	0,50	177,17 x 5,33	OR 177,17x5,33-N70	STR 19-365/395A
180,00	190,00	7,30	9,10	11,00	0,50	179,30 x 5,70	OR 179,30x5,70-N70	STR 180/190x1,7-Y95A
184,00	196,20	9,50	12,00	15,00	0,60	183,52 x 6,99	OR 183,52x6,99-N70	STR 19-442/395A
185,00	195,00	7,30	9,10	11,00	0,50	184,30 x 5,70	OR 184,30x5,70-N70	STR 185/195x1,7-Y95A
190,00	200,00	7,30	9,10	11,00	0,50	189,30 x 5,70	OR 189,30x5,70-N70	STR 190/x1,7-Y95A
190,00	199,40	7,00	8,80	11,00	0,50	189,87 x 5,33	OR 189,87x5,33-N70	STR 19-367/395A
190,00	202,10	9,50	12,00	15,00	0,60	189,87 x 6,99	OR 189,87x6,99-N70	STR 19-443/395A
195,00	205,00	7,30	9,10	11,00	0,50	194,30 x 5,70	OR 194,30x5,70-N70	STR 195/205x1,7-Y95A
196,00	205,40	7,00	8,80	11,00	0,50	196,22 x 5,33	OR 196,22x5,33-N70	STR 19-368/395A
196,00	208,20	9,50	12,00	15,00	0,60	196,22 x 6,99	OR 196,22x6,99-N70	STR 19-444/395A
200,00	210,00	7,30	9,10	11,00	0,50	199,30 x 5,70	OR 199,30x5,70-N70	STR 200/210x1,7-Y95A
200,00	212,20	9,50	12,00	15,00	0,60	199,80 x 6,99	OR 199,80x6,99-N70	AF-120-2000212225-1012
209,00	218,40	7,00	8,80	11,00	0,50	208,92 x 5,33	OR 208,92x5,33-N70	STR 19-370/395A
210,00	220,00	7,30	9,10	11,00	0,50	209,30 x 5,70	OR 209,30x5,70-N70	STR 210/220x1,7-Y95A
210,00	222,20	9,50	12,00	15,00	0,60	208,92 x 6,99	OR 208,92x6,99-N70	AF-120-674-1012
215,00	227,20	9,50	12,00	15,00	0,60	215,27 x 6,99	OR 215x27x6,99-N70	STR 19-446/395A
220,00	230,00	7,30	9,10	11,00	0,50	219,30 x 5,70	OR 219,30x5,70-N70	STR 220/230x1,7-Y95A
222,00	231,40	7,00	8,80	11,00	0,50	221,62 x 5,33	OR 221,62x5,33-N70	STR 19-372/395A
228,00	237,40	7,00	8,80	11,00	0,50	227,97 x 5,33	OR 227,97x5,33-N70	STR 19-373/395A
230,00	240,00	7,30	9,10	11,00	0,50	229,30 x 5,70	OR 229,30x5,70-N70	STR 230/240x1,7-Y95A
230,00	242,20	9,50	12,00	15,00	0,60	227,97 x 6,99	OR 227,97x6,99-N70	STR 19-447/395A
240,00	250,00	7,30	9,10	11,00	0,50	239,30 x 5,70	OR 239,30x5,70-N70	STR 240/250x1,7-Y95A
240,00	252,20	9,50	12,00	15,00	0,60	240,67 x 6,99	OR 240,67x6,99-N70	AF-120-2400252225-1012
250,00	260,00	7,30	9,10	11,00	0,50	249,30 x 5,70	OR 249,30x5,70-N70	STR 250/260x1,7-Y95A
255,00	267,20	9,50	12,00	15,00	0,60	253,57 x 6,99	OR 253,57x6,99-N70	AF-120-2550267225-1012
260,00	272,20	9,50	12,00	15,00	0,60	259,70 x 6,99	OR 259,70x6,99-N70	AF-120-2600272225-1012
260,00	270,00	7,30	9,10	11,00	0,50	259,30 x 5,70	OR 259,30x5,70-N70	AF-120-2600270017-1012
265,00	277,20	9,50	12,00	15,00	0,60	266,07 x 6,99	OR 266,07x6,99-N70	AF-120-2650277225-1012
270,00	280,00	7,30	9,10	11,00	0,50	269,30 x 5,70	OR 269,30x5,70-N70	STR 270/280x1,7-Y95A
273,00	285,20	9,50	12,00	15,00	0,60	272,40 x 6,99	OR 272,40x6,99-N70	STR 19-684/395A
280,00	292,20	9,50	12,00	15,00	0,60	278,77 x 6,99	OR 278,77x6,99-N70	AF-120-2800292225-1012
280,00	290,00	7,30	9,10	11,00	0,50	279,30 x 5,70	OR 279,30x5,70-N70	AF-120-2800290017-1012
285,00	297,20	9,50	12,00	15,00	0,60	285,10 x 6,99	OR 285,10x6,99-N70	AF-120-2850297225-1012
290,00	300,00	7,30	9,10	11,00	0,50	289,30 x 5,70	OR 289,30x5,70-N70	AF-120-2900300017-1012
300,00	312,20	9,50	12,00	15,00	0,60	297,80 x 6,99	OR 297,80x6,99-N70	AF-120-3000312225-1012
300,00	310,00	7,30	9,10	11,00	0,50	299,30 x 5,70	OR 299,30x5,70-N70	AF-120-3000310017-1012

O-Ring

Example for ordering O-Ring metric:

OR 24,20 x 3,0-N70

Type
Nominal ID diameter
Cross-section
Standard material

Example for ordering O-Ring AS:

OR 50,17 x 5,33 - N70

Type
Nominal ID diameter.
Cross-section
Standard material

Material - Key:

O-Ring

N70 - NBR	70 Shore A
N80 - NBR	80 Shore A
N90 - NBR	90 Shore A
F70 - FPM	70 Shore A
F80 - FPM	80 Shore A
E70 - EPDM	70 Shore A
S70 - Silicone	70 Shore A

Example for ordering Back-up Ring metric:

STR 165 / 175 x 1,7-Y95A

Type
Nominal ID diameter
Nominal OD diameter
Width
Standard material

Example for ordering Back-up Ring AS:

AF-120-1800192225-1012

Type
Nominal diameter x 10
Nominal diameter x 10
Width
Standard material

Material Key:

Back – up Ring Design (PTFE)
AF-120 (Endless/solid)
AF-100 (Spiral)
AF-110 (30° split)
AF-150 (Concave endless/solid)
AF-140 (Concave split)

Material Key (backup-up Ring):
PU - Polyurethane
AF-1012 - Virgin PTFE
AF-4115 - PTFE with glass fibre
AF-2426 - PFTE with carbon
AF-5640 - PTFE with bronze/additive

WARNING: Limits of application stated herein are standard values. They could be individually transgressed with due consideration to respective service conditions. In the event of a large duty cycle, pulsating operation and other complex operational conditions, simultaneous transgression of these values is not recommended. Due to a large variety of service conditions that may arise in course of actual use, the company does not take responsibility of or guarantee the functional accuracy of the individual components. Rights for changes are reserved.

O-Ring/Back-up ring
GDS

The static seal GDS is made of very wear restistent polyurethane. The profile of the static seals guarantees a simple and easy mounting. The polyurethane material gives an essentially higher extrusion resistance compared to a standard O-ring.
There is no need of a back-up ring here as you have two parts in one.

Pressure of operating: static to 50 Mpa (500 bar)
Temperature : -40° C up to +110° C

Special Facts:

- Very high resistance of extrusion
- Low pressure-set
- High wear resistance
- Low costs of groove geometry
- Economic constructions
- Resistance to twisting
- Small mounting area
- Simple mounting

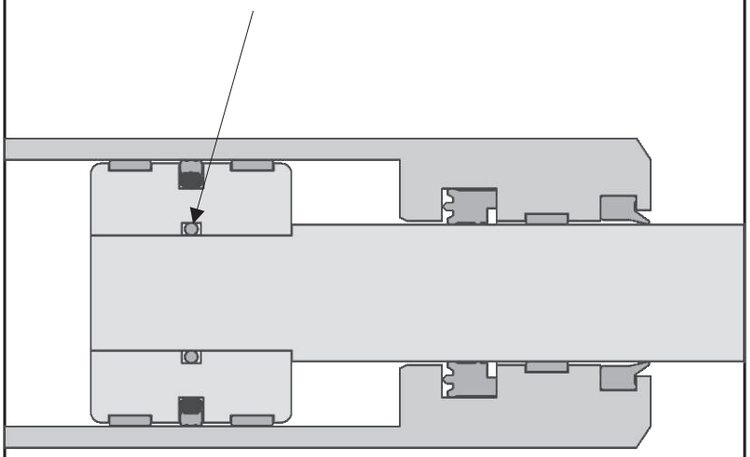

O-Ring/Back-up ring
GDS

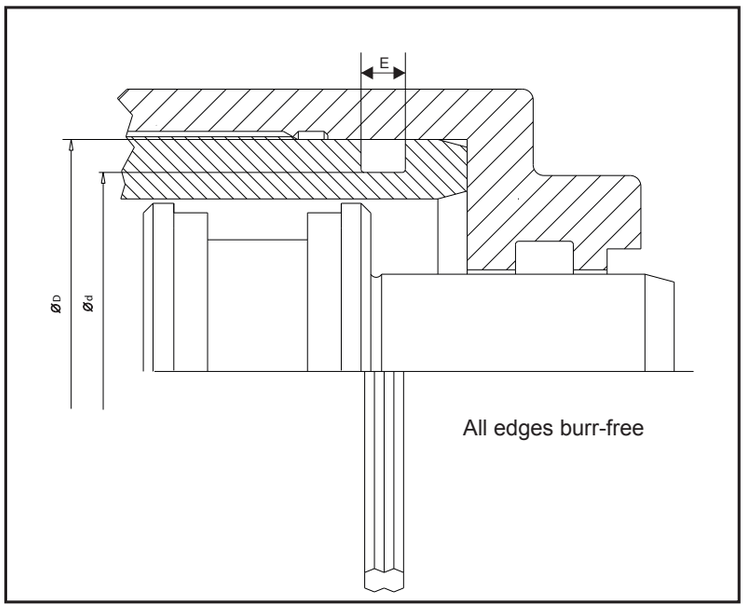

Limits of application	
Pressure of operation	: to 50 MPa (500 bar)
Temperature	: -40 up to +110 °C

Media of use
Hydraulic oils mineral oil based
Natural pressure fluids (bio-oils) please ask for.

Surface finish		
Surface	Rz	Ra
Groove diameter d	6,3 µm	1,6 µm
Groove flank	10,0 µm	3,2 µm

O-Ring/Back-up ring
GDS

D H8	d h9	E	Part N°.
16,60	12,00	3,10	GDS 12/16,60x3,10
17,00	14,60	3,40	GDS 17/14,60x3,40
18,00	14,00	5,80	GDS 18/14x5,80
19,00	15,60	4,40	GDS 19/15,60x4,40
20,00	16,00	5,80	GDS 20/16x5,80
20,50	17,20	5,00	GDS 20,50x17,20x5
24,00	20,00	4,80	GDS 24/20x4,80
26,80	22,00	5,40	GDS 26,80/22x5,40
30,00	25,40	5,40	GDS 30/25,4x5,40
36,00	32,00	6,20	GDS 36/32x6,20
40,00	35,20	5,40	GDS 50/35,20x5,40
40,00	35,40	5,40	GDS 50/35,40x5,40
42,80	38,00	6,80	GDS 42,80/38x6,80
45,00	35,80	9,60	GDS 45/35,80x9,60
45,00	40,00	5,40	GDS 45/40x5,40
50,00	40,80	9,60	GDS 50/40,80x9,60
50,00	44,60	6,20	GDS 50/44,60x6,20
55,00	49,60	6,20	GDS 55/49,60x6,20
55,00	49,90	5,30	GDS 55/49,90x5,30
55,00	51,00	3,50	GDS 55/51x3,50
57,00	52,20	4,10	GDS 57/52,20x4,10
60,00	54,40	5,80	GDS 60/54,40x5,80
60,00	54,60	6,20	GDS 60/54,60x6,20
63,00	53,80	9,60	GDS 63/53,80x9,60
63,00	56,60	6,40	GDS 63/56,60x6,40
63,00	57,40	4,80	GDS 63/57,60x4,80
63,00	57,60	6,20	GDS 63/57,60x6,20
65,00	59,40	5,00	GDS 65/59,40x5
65,00	59,60	6,20	GDS 65/59,60x6,20
65,00	60,00	5,00	GDS 65/60x5
68,00	62,70	5,00	GDS 68/62,70x5
70,00	64,60	6,20	GDS 70/64,60x6,20
70,00	65,00	5,00	GDS 70/65x5
72,00	66,40	5,00	GDS 72/66,40x5
75,00	69,40	5,30	GDS 75/69,40x5,30
75,00	69,60	6,20	GDS 75/69,60x6,20
76,60	72,00	4,80	GDS 76,60/72x4,80
78,00	73,00	5,00	GDS 78/73x5
80,00	70,80	9,60	GDS 80/70,80x9,60
80,00	73,60	6,40	GDS 80/73,60x6,40
80,00	73,80	6,90	GDS 80/73,60x6,90
80,00	74,40	5,30	GDS 80/74,40x5,30
85,00	79,40	5,30	GDS 85/79,40x5,30
90,00	81,40	9,00	GDS 90/81,40x9
90,00	83,00	6,50	GDS 90/83x6,50
90,00	84,40	4,80	GDS 90/84,40x4,80
100,00	90,80	9,60	GDS 100/90,80x9,60
100,00	91,60	8,50	GDS 100/91,60x8,50
100,00	91,40	9,00	GDS 100/91,40x9
100,00	93,80	6,90	GDS 100/93,80x6,90
110,00	101,40	9,00	GDS 110/101,40x9
125,00	115,80	9,60	GDS 125/115,80x9,60
125,00	116,40	9,00	GDS 125/116,40x9
125,00	116,60	8,50	GDS 125/116,6x8,50

D H8	d h9	E	Part N°.
140,00	128,40	12,30	GDS 140/128,40x12,30
140,00	131,60	8,50	GDS 140/131,60x8,50
150,00	138,40	12,30	GDS 150/138,40x12,30
160,00	148,40	12,30	GDS 160/148,40x12,30
165,00	153,40	12,30	GDS 165/153,40x12,30
165,00	156,60	8,50	GDS 165/156,60x8,50
170,00	160,80	9,60	GDS 170/160,80x9,60
180,00	168,40	12,30	GDS 180/168,40x12,30
180,00	171,60	8,50	GDS 180/171,60x8,50
200,00	188,40	12,30	GDS 200/188,40x12,30
225,00	213,00	10,70	GDS 225/213x10,70
250,00	238,00	10,70	GDS 250/238x10,70
250,00	238,40	12,30	GDS 250/238,40x12,30
270,00	258,40	12,30	GDS 270/258,40x12,30
280,00	268,00	10,70	GDS 280/268x10,70
300,00	288,00	10,70	GDS 300/288x10,70

Example for ordering GDS Back-up and O-ring in one seal:

GDS 16,60/12 x 3,10

Type
Nominal diameter D
Nominal diameter d.
Groove width

WARNING: Limits of application stated herein are standard values. They could be individually transgressed with due consideration to respective service conditions. In the event of a large duty cycle, pulsating operation and other complex operational conditions, simultaneous transgression of these values is not recommended. Due to a large variety of service conditions that may arise in course of actual use, the company does not take responsibility of or guarantee the functional accuracy of the individual components. Rights for changes are reserved.

product index

Profile	Type	Specification	Limitations of Use	Material	
			Temperature	Sealing element	Page
	XR	X-ring ASA 568A	-50 up to +240° C	Rubber Elastomere	254

Regarding the great variety of practice applications please ask our customer service department personally for missing types or dimensions

X-ring
XR

Content

Mainly types of X-ring material / Tolerances
Surface finish
Machining tolerance for static and dynamic application
Methodes of Mounting
Groove sizes
Standard sizes

Groove sizes-dynamic external sealing
Groove sizes-dynamic internal sealing

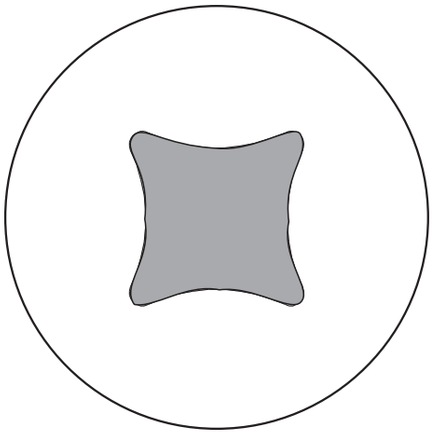

X-ring as a further development on the O-ring has a square cross section and is provided with sealing lips on the corners. The X-ring sealing effect result is through the 4 sealing lips and not due to deform of the total cross section. The wide range of different quality of materials make it possible to seal different gas and fluids.

Pressure of operation: static		to 20Mpa (200 bar) without back-up ring to 40Mpa (400 bar) with back-up ring to 200Mpa (2000 bar) with special back-up ring
	: dynamic	off 5Mpa (50 bar) with back ring
Speed	: dynamic	0,5 m/s max.
	rotary	1,0 m/s max.
Temperature	: depending of material	-50° C bis +240° C

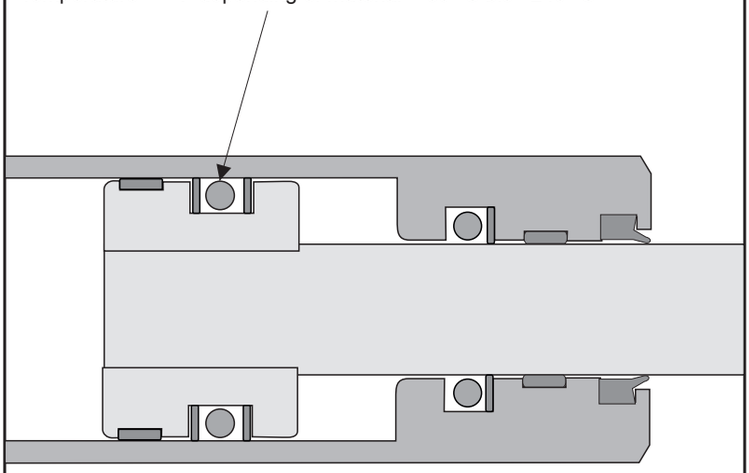

Special Features:

- No twisting during mounting and operation
- Burr-free sealing lips
- Cost convenient groove geometry
- Economic constructions
- Double acting
- High temperature and pressure range
- Small space if required
- Extensive series of sizes

X-ring materials / Main types

Due to the wide range of synthetic elastomers that are available on the market, X-ring material can be made to withstand temperatures from minus 50° C up to plus 240° C. to serve a wide range on fluid environments.

Nevertheless all combinations of material do not behave alike. Therefore, we include a table to provide an overview of standard materials and the proper diameter data with reference to relevant applications.

It is not unusual to develop non standard material to cater for the influence of some factors that might affect conditions of use.

Materials	Hardness Shore A	Temperature °C	Standard material and relevant application
N70 N80	70 ± 5 80 ± 5	-30 - +130 -30 - +130	Standardmaterial in pneumatic and hydraulic Resistant to mineral oils, native and animal origin, water up to plus 70° C, flame resistant fluids - HFA (oil in water- emulsion) - HFB (water in Oil-emulsion) - HFC (aqueous solution of polyalkylene glycol)
E80	80 ± 5	-50 - +150	Outstanding resistance to atmospheric effective substances, hot water steam up to 150° C. Good resistane to ozone, phosphate ester bases and brake fluids Not resistant to petroleum production.
F75	75 ± 5	-30 - +240	For static and dynamic sealing in combination with aliphatic and aromatic hydrocarbons, except entones and ozone at higher temperature.

A multitude of other mixtures are available for special purpose applications.

Surface finish:

Applications	Surface	R max µm	Rz µm	Ra µm
radial dynamic	Rod/Housing bore	1,0-2,5	0,63-1,60	0,10-0,40
rotary	groove diameter	≤10,00	<6,30	<1,60
	groove flank	≤10,00	<6,30	<1,60
radial static	Rod/Housing bore	≤10,00	<6,30	≤1,60
axial static	groove diameter	≤16,00	≤10,00	≤1,60
	groove flank	≤16,00	≤10,00	≤3,20
	Pulsatic pressure			
	Rod/Housing bore	≤6,30	≤4,00	≤0,80
	groove diameter	≤10,00	≤6,30	≤1,60
	groove flank	≤10,00	≤6,30	≤1,60

Fit Tolerances for static and dynamic applications:

Pressure	X-ring-Hardness	Tolerances
≤ 2 Mpa (20 bar)	min.70 shore A	H8/f7
≤ 7 Mpa (70 bar)	min.70 shore A	H8/f7
≤ 10 Mpa (100 bar)	min.70 shore A+back-up ring	H8/f7
≤ 10 Mpa (100 bar)	min.70 shore A	H7/g6
≤ 35 Mpa (350 bar)	min.70 shore A+back-up ring	H7/g6

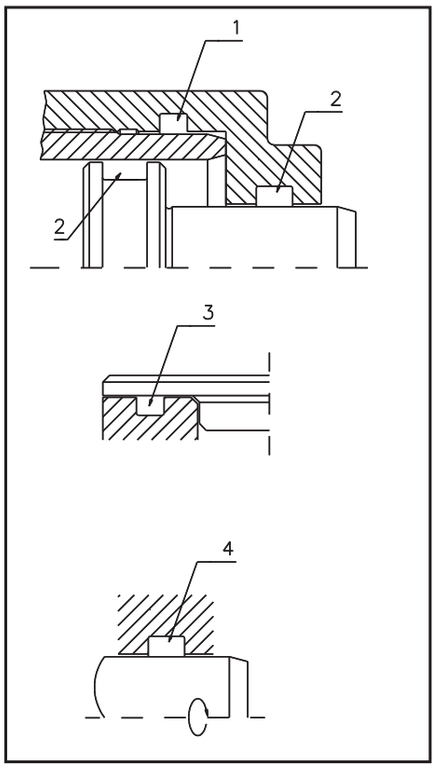

Mounting methods:

1. Radial static

2. Radial dynamic

With this method, take care that the internal diameter of X-ring nearly correspon-ding to the rod diameter (internally sealing) or stretched on the groove ondiame-ter (externally sealing) as the case may be.

3. Axial static

Please notice that the direction of pressure is important. If the presssure acts from the inside, the X-ring must fit in with the outer-diameter of the groove, or may need to be compressed by around 1 %. If pressure acts from the outside, the X-ring is to fit in with the internal diameter of the groove, or X-ring the need a stretch by 2-5 %.

4. Rotary Internal Sealing

To reduce centrifugal forces, the X-ring is to be incorporated in the resting static parts of the housing. Then the internal diameter must be 2 - 5 % larger than the shaft and should be arranged as near as possible to the medium to be sealed. (heat purgation)

Stretch of X-ring:
dynamic 1% - 10%, static 5% - 15 %
These values are dependent on respective cord strength for larger seals shatter.

We recommend the use of Back-up rings if pressure is more than 5 Mpa (50 Bar) in the operation of dynamic otherwice the X-ring could extrude.

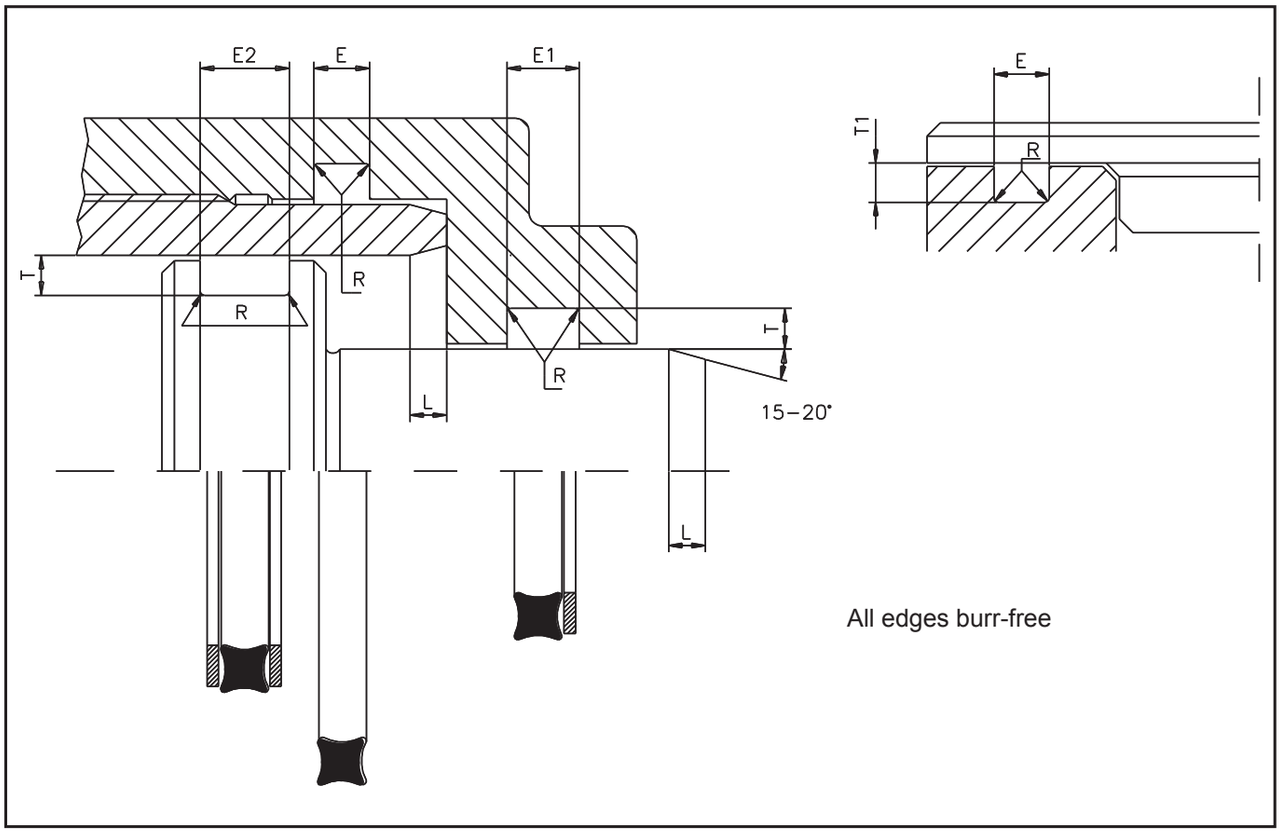

Groove Sizes

	dynamic	static	without Back-up ring	1 Back-up ring	2 Back-up ring	Radius	Chamfer length
S	T ±0,05	T1 ±0,05	E ±0,2	E1 ±0,2	E2 ±0,2	R (max)	L (min)
1,78	1,50	1,40	2,15	3,65	5,15	0,20	1,50
2,62	2,25	2,10	3,15	4,65	6,15	0,20	1,50
3,50/3,53	3,20	3,00	4,10	5,60	7,10	0,40	1,80
5,33	4,80	4,60	6,40	8,20	10,00	0,50	2,70
6,99/7,00	6,40	6,00	8,40	10,90	13,40	0,60	3,60

Standard Sizes

di	s	Part N°.
2,90	1,78	XR 2,90x1,78N80
3,68	1,78	XR 3,68x1,78N80
4,48	1,78	XR 4,48x1,78N80
4,62	1,78	XR 4,62x1,78N80
5,28	1,78	XR 5,28x1,78N80
5,70	1,78	XR 5,70x1,78N80
6,07	1,78	XR 6,07x1,78N80
6,65	1,78	XR 6,65x1,78N80
7,66	1,78	XR 7,66x1,78N80
8,70	1,78	XR 8,70x1,78N80
9,25	1,78	XR 9,25x1,78N80
9,70	1,78	XR 9,70x1,78N80
12,42	1,78	XR 12,42x1,78N80
14,00	1,78	XR 14,00x1,78N80
15,60	1,78	XR 15,60x1,78N80
17,17	1,78	XR 17,17x1,78N80
18,77	1,78	XR 18,77x1,78N80
20,35	1,78	XR 20,35x1,78N80
21,95	1,78	XR 21,95x1,78N80
9,19	2,62	XR 9,19x2,62N80
9,80	2,62	XR 9,80x2,62N80
10,78	2,62	XR 10,78x2,62N80
11,70	2,62	XR 11,70x2,62N80
12,37	2,62	XR 12,37x2,62N80
12,80	2,62	XR 12,80x2,62N80
13,70	2,62	XR 13,70x2,62N80
13,95	2,62	XR 13,95x2,62N80
14,80	2,62	XR 14,80x2,62N80
15,54	2,62	XR 15,54x2,62N80
17,13	2,62	XR 17,13x2,62N80
17,75	2,62	XR 17,75x2,62N80
18,72	2,62	XR 18,72x2,62N80
19,60	2,62	XR 19,60x2,62N80
20,29	2,62	XR 20,29x2,62N80
21,89	2,62	XR 21,89x2,62N80
23,47	2,62	XR 23,47x2,62N80
25,07	2,62	XR 25,07x2,62N80
26,64	2,62	XR 26,64x2,62N80
28,24	2,62	XR 28,24x2,62N80
66,34	2,62	XR 66,34x2,62N80
18,64	3,53	XR 18,64x3,53N80
20,22	3,53	XR 20,22x3,53N80
20,90	3,53	XR 20,93x3,53N80
21,82	3,53	XR 21,82x3,53N80
23,39	3,53	XR 23,39x3,53N80
23,99	3,53	XR 23,99x3,53N80
24,99	3,53	XR 24,99x3,53N80
25,90	3,53	XR 25,90x3,53N80
26,58	3,53	XR 26,58x3,53N80
27,57	3,53	XR 25,57x3,53N80
28,17	3,53	XR 28,17x3,53N80
29,75	3,53	XR 29,75x3,53N80
31,34	3,53	XR 31,34x3,53N80
32,04	3,53	XR 32,04x3,53N80
32,92	3,53	XR 32,92x3,53N80
33,80	3,53	XR 33,80x3,53N80
34,52	3,53	XR 34,52x3,53N80
36,10	3,53	XR 36,10x3,53N80
37,70	3,53	XR 37,70x3,53N80

di	s	Part N°.
40,87	3,53	XR 40,87x3,53N80
44,04	3,53	XR 44,04x3,53N80
47,22	3,53	XR 47,22x3,53N80
50,39	3,53	XR 50,39x3,53N80
53,57	3,53	XR 53,57x3,53N80
56,75	3,53	XR 56,75x3,53N80
59,92	3,53	XR 59,92x5,33N80
63,09	3,53	XR 63,09x3,53N80
37,47	5,33	XR 37,47x5,33N80
39,64	5,33	XR 39,64x5,33N80
40,64	5,33	XR 40,64x5,33N80
41,80	5,33	XR 41,80x5,33N80
43,82	5,33	XR 43,82x5,33N80
45,04	5,33	XR 45,04x5,33N80
45,84	5,33	XR 45,84x5,33N80
46,99	5,33	XR 46,99x5,33N80
47,80	5,33	XR 47,80x5,33N80
50,17	5,33	XR 50,17x5,33N80
52,00	5,33	XR 52,00x5,33N80
53,34	5,33	XR 53,34x5,33N80
54,50	5,33	XR 54,50x5,33N80
56,52	5,33	XR 56,52x5,33N80
57,52	5,33	XR 57,52x5,33N80
59,69	5,33	XR 59,69x5,33N80
61,54	5,33	XR 61,54x5,33N80
62,87	5,33	XR 62,87x5,33N80
64,59	5,33	XR 64,59x5,33N80
66,04	5,33	XR 66,04x5,33N80
67,64	5,33	XR 67,64x5,33N80
69,22	5,33	XR 69,22x5,33N80
70,64	5,33	XR 70,64x5,33N80
72,40	5,33	XR 72,40x5,33N80
73,84	5,33	XR 73,84x5,33N80
75,57	5,33	XR 75,57x5,33N80
78,74	5,33	XR 78,71x5,33N80
80,09	5,33	XR 80,09x5,33N80
81,92	5,33	XR 81,92x5,33N80
83,39	5,33	XR 83,99x5,33N80
85,09	5,33	XR 85,09x5,33N80
86,64	5,33	XR 86,64x5,33N80
88,27	5,33	XR 88,27x5,33N80
89,59	5,33	XR 89,59x5,33N80
91,44	5,33	XR 91,44x5,33N80
94,62	5,33	XR 94,62x5,33N80
97,99	5,33	XR 97,99x5,33N80
100,97	5,33	XR 100,97x5,33N80
102,34	5,33	XR 102,34x5,33N80
104,14	5,33	XR 104,14x5,33N80
105,80	5,33	XR 105,80x5,33N80
107,32	5,33	XR 107,32x5,33N80
110,49	5,33	XR 110,49x5,33N80
113,67	5,33	XR 113,67x5,33N80
113,67	6,99	XR 113,67x6,99N80
115,84	6,99	XR 115,84x6,99N80
116,84	6,99	XR 116,84x6,99N80
120,02	6,99	XR 120,02x6,99N80
123,19	6,99	XR 123,19x6,99N80
126,37	6,99	XR 126,37x6,99N80
129,54	6,99	XR 129,54x6,99N80

X-ring
XR

di	s	Part N°.
132,72	6,99	XR 132,72x6,99N80
135,89	6,99	XR 135,89x6,99N80
139,07	6,99	XR 139,07x6,99N80
142,24	6,99	XR 142,24x6,99N80
145,42	6,99	XR 145,42x6,99N80
148,59	6,99	XR 148,59x6,99N80
151,77	6,99	XR 151,77x6,99N80
155,02	6,99	XR 155,02x6,99N80
158,12	6,99	XR 158,12x6,99N80
161,02	6,99	XR 161,02x6,99N80
164,47	6,99	XR 164,47x6,99N80
167,02	6,99	XR 167,02x6,99N80
170,82	6,99	XR 170,82x6,99N80
173,52	6,99	XR 173,52x6,99N80
177,17	6,99	XR 177,17x6,99N80
180,52	6,99	XR 180,52x6,99N80
183,52	6,99	XR 183,52x6,99N80
186,02	6,99	XR 186,02x6,99N80
189,87	6,99	XR 189,87x6,99N80
192,02	6,99	XR 192,02x6,99N80
196,22	6,99	XR 196,22x6,99N80
199,02	6,99	XR 199,02x6,99N80
202,57	6,99	XR 202,57x6,99N80
206,80	6,99	XR 206,80x6,99N80
211,02	6,99	XR 211,02x6,99N80
215,27	6,99	XR 215,27x6,99N80
219,02	6,99	XR 219,02x6,99N80
223,50	6,99	XR 223,50x6,99N80
227,97	6,99	XR 227,97x6,99N80
231,02	6,99	XR 231,02x6,99N80

di	s	Part N°.
235,00	6,99	XR 235,00x6,99N80
240,67	6,99	XR 240,67x6,99N80
243,02	6,99	XR 243,02x6,99N80
248,00	6,99	XR 248,00x6,99N80
253,57	6,99	XR 253,57x6,99N80
259,00	6,99	XR 259,00x6,99N80
266,07	6,99	XR 266,07x6,99N80
273,10	6,99	XR 273,10x6,99N80
278,77	6,99	XR 278,77x6,99N80
284,00	6,99	XR 284,00x6,99N80
287,50	6,99	XR 287,50x6,99N80
291,47	6,99	XR 291,47x6,99N80
298,00	6,99	XR 298,00x6,99N80
304,17	6,99	XR 304,17x6,99N80
310,00	6,99	XR 310,00x6,99N80
316,87	6,99	XR 316,87x6,99N80
323,50	6,99	XR 323,50x6,99N80
329,57	6,99	XR 329,57x6,99N80
336,50	6,99	XR 336,50x6,99N80
342,27	6,99	XR 342,27x6,99N80
348,50	6,99	XR 348,50x6,99N80
354,97	6,99	XR 354,97x6,99N80
362,50	6,99	XR 362,50x6,99N80
367,67	6,99	XR 374,00x6,99N80
374,00	6,99	XR 374,00x6,99N80
380,37	6,99	XR 380,37x6,99N80
387,50	6,99	XR 387,50x6,99N80
393,07	6,99	XR 393,07x6,99N80
401,00	6,99	XR 401,00x6,99N80

Example for ordering X-Ring:

XR 46,99 x5,33 - N80

Type
Inner diameter
Cross-section
Standard material

Material:

X-Ring
N80 - NBR 80 Shore A
F75 - FPM 75 Shore A
E80 - EPDM 80 Shore A

WARNING: Limits of application stated herein are standard values. They could be individually transgressed with due consideration to respective service conditions. In the event of a large duty cycle, pulsating operation and other complex operational conditions, simultaneous transgression of these values is not recommended. Due to a large variety of service conditions that may arise in course of actual use, the company does not take responsibility of or guarantee the functional accuracy of the individual components. Rights for changes are reserved.

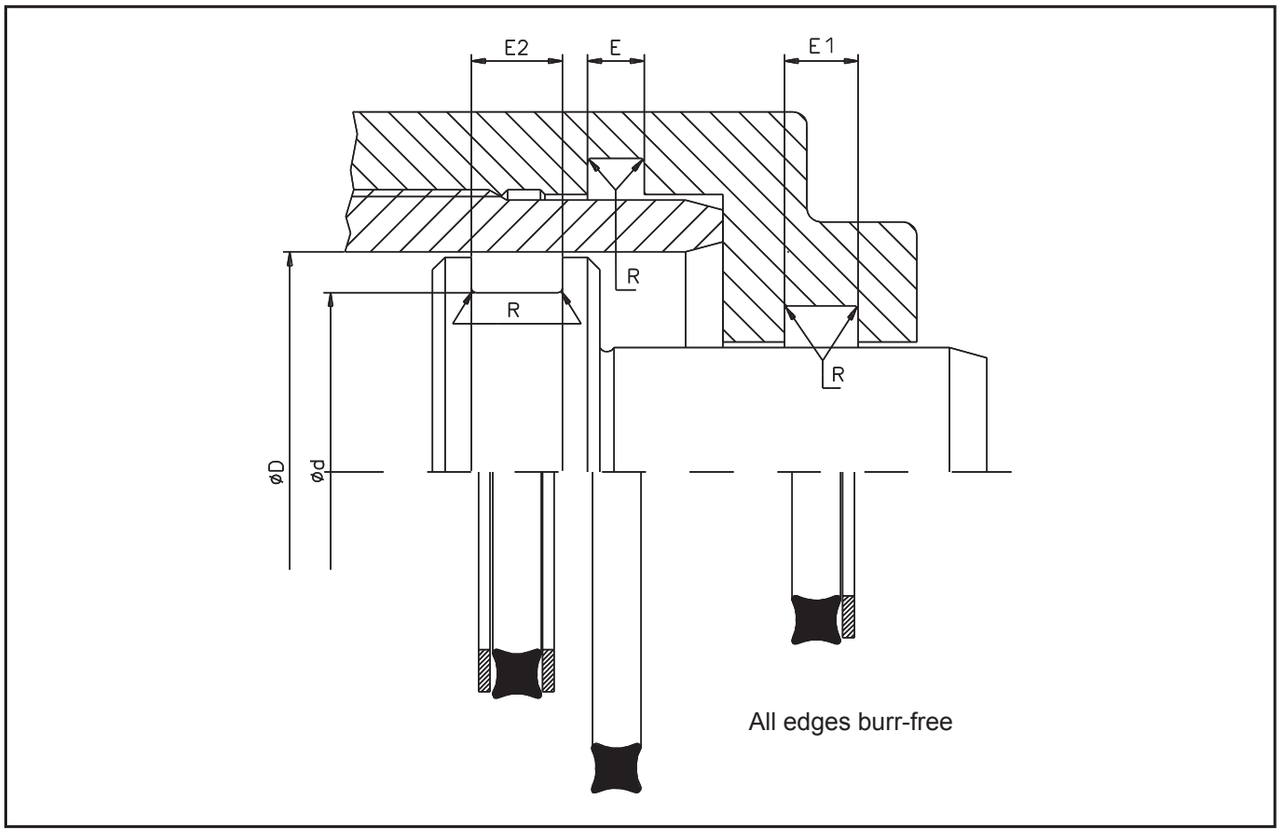

Groove sizes for dynamic external sealing applications

Groove size							Part N.°	
D H8	d h9	E ±0,2	E1 ±0,2	E2 ±0,2	R (max)	di x S	X-Ring Part N.°	Back-up ring Part N.°
7,00	4,00	2,15	3,65	5,15	0,20	3,68 x 1,78	XR 3,68x1,78-N80	AF-100-0040007014-1012
8,00	5,00	2,15	3,65	5,15	0,20	4,48 x 1,78	XR 4,48x1,78-N80	AF-100-0050008014-1012
10,00	7,00	2,15	3,65	5,15	0,20	6,07 x 1,78	XR 6,07x1,78-N80	STR 19-10/-395A
14,00	9,50	3,15	4,65	6,15	0,20	9,19 x 2,62	XR 9,19x2,62-N80	STR 19-110/-395A
18,00	13,50	3,15	4,65	6,15	0,20	12,80 x 2,62	XR 12,80x2,62-N80	AF-100-0135018014-1012
19,00	14,50	3,15	4,65	6,15	0,20	13,95 x 2,62	XR 13,95x2,62-N80	STR 19-113/-395A
20,00	15,50	3,15	4,65	6,15	0,20	14,70 x 2,62	XR 14,70x2,62-N80	AF-100-0155020014-1012
22,00	17,50	3,15	4,65	6,15	0,20	17,13 x 2,62	XR 17,13x2,62-N80	STR 19-115/-395A
24,00	19,50	3,15	4,65	6,15	0,20	18,72 x 2,62	XR 18,72x2,62-N80	STR 19-116/-395A
25,00	20,50	3,15	4,65	6,15	0,20	19,60 x 2,62	XR 19,60x2,62-N80	AF-100-0205025014-1012
26,00	19,60	4,10	5,60	7,10	0,40	18,64 x 3,53	XR 18,64x3,53-N80	AF-100-0196026014-1012
28,00	21,60	4,10	5,60	7,10	0,40	20,90 x 3,53	XR 20,93x3,53-N80	AF-100-0216028014-1012
30,00	23,60	4,10	5,60	7,10	0,40	23,39 x 3,53	XR 23,39x3,53-N80	AF-100-0236030014-1012
32,00	25,60	4,10	5,60	7,10	0,40	24,99 x 3,53	XR 24,99x3,53-N80	AF-100-0256032014-1012
35,00	28,60	4,10	5,60	7,10	0,40	28,17 x 3,53	XR 28,17x3,53-N80	AF-100-0286035014-1012
40,00	33,60	4,10	5,60	7,10	0,40	32,92 x 3,53	XR 32,92x3,53-N80	AF-100-0336040014-1012
42,00	35,60	4,10	5,60	7,10	0,40	34,52 x 3,53	XR 34,52x3,53-N80	AF-100-0356042014-1012
45,00	38,60	4,10	5,60	7,10	0,40	37,70 x 3,53	XR 37,70x3,53-N80	AF-100-0386045014-1012
48,00	38,40	6,40	8,20	10,00	0,50	37,47 x 3,53	XR 37,47x3,53-N80	STR 19-325/-395A
50,00	40,40	6,40	8,20	10,00	0,50	39,64 x 5,33	XR 39,64x5,33-N80	AF-100-0404050017-1012
52,00	42,40	6,40	8,20	10,00	0,50	40,64 x 5,33	XR 40,64x5,33-N80	STR 19-326/395A

X-ring
XR

Groove size							Part N.°	
D H8	d h9	E ±0,2	E1 ±0,2	E2 ±0,2	R (max)	di x S	X-Ring Part N.°	Back-up Part N.°
55,00	45,40	6,40	8,20	10,00	0,50	43,82 x 5,33	XR 43,82x5,33-N80	STR 19-327/395A
56,00	46,40	6,40	8,20	10,00	0,50	45,04 x 5,33	XR 45,04x5,33-N80	AF-100-0464055017-1012
58,00	48,40	6,40	8,20	10,00	0,50	46,99 x 5,33	XR 46,99x5,33-N80	STR 19-328/395A
60,00	50,40	6,40	8,20	10,00	0,50	47,80 x 5,33	XR 47,80x5,33-N80	AF-100-0504060017-1012
62,00	52,40	6,40	8,20	10,00	0,50	50,17 x 5,33	XR 50,17x5,33-N80	STR 19-329/395A
63,00	53,40	6,40	8,20	10,00	0,50	52,00 x 5,33	XR 52,00x5,33-N80	AF-100-0534063017-1012
65,00	55,40	6,40	8,20	10,00	0,50	53,34 x 5,33	XR 53,34x5,33-N80	STR 19-330/395A
68,00	58,40	6,40	8,20	10,00	0,50	56,52 x 5,33	XR 56,52x5,33-N80	STR 19-331/395A
70,00	60,40	6,40	8,20	10,00	0,50	59,69 x 5,33	XR 59,69x5,33-N80	STR 19-332/395A
72,00	62,40	6,40	8,20	10,00	0,50	61,54 x 5,33	XR 61,54x5,33-N80	AF-100-0624072017-1012
75,00	65,40	6,40	8,20	10,00	0,50	64,59 x 5,33	XR 64,59x5,33-N80	AF-100-0654075017-1012
78,00	68,40	6,40	8,20	10,00	0,50	67,64 x 5,33	XR 67,64x5,33-N80	AF-100-0684078017-1012
80,00	70,40	6,40	8,20	10,00	0,50	69,22 x 5,33	XR 69,22x5,33-N80	STR 19-335/395A
82,00	72,40	6,40	8,20	10,00	0,50	70,64 x 5,33	XR 70,64x5,33-N80	AF-100-0724080017-1012
85,00	75,40	6,40	8,20	10,00	0,50	73,84 x 5,33	XR 73,84x5,33-N80	AF-100-0754085017-1012
88,00	78,40	6,40	8,20	10,00	0,50	75,57 x 5,33	XR 75,57x5,33-N80	AF-100-0784088017-1012
90,00	80,40	6,40	8,20	10,00	0,50	78,74 x 5,33	XR 78,74x5,33-N80	STR 19-338/395A
92,00	82,40	6,40	8,20	10,00	0,50	80,09 x 5,33	XR 80,09x5,33-N80	AF-100-0824092017-1012
95,00	85,40	6,40	8,20	10,00	0,50	85,09 x 5,33	XR 85,09x5,33-N80	STR 19-340/395A
98,00	88,40	6,40	8,20	10,00	0,50	86,64 x 5,33	XR 86,64x5,33-N80	AF-100-0884098017-1012
100,00	90,40	6,40	8,20	10,00	0,50	88,27 x 5,33	XR 88,27x5,33-N80	STR 19-341/395A
102,00	92,40	6,40	8,20	10,00	0,50	91,44 x 5,33	XR 91,44x5,33-N80	STR 19-342/395A
105,00	95,40	6,40	8,20	10,00	0,50	94,62 x 5,33	XR 94,62x5,33-N80	STR 19-343/395A
110,00	100,40	6,40	8,20	10,00	0,50	97,99 x 5,33	XR 97,99x5,33-N80	AF-100-1004105017-1012
112,00	102,40	6,40	8,20	10,00	0,50	100,97 x 5,33	XR 100,97x5,33-N80	STR 19-345/395A
115,00	105,40	6,40	8,20	10,00	0,50	104,14 x 5,33	XR 104,14x5,33-N80	STR 19-346/395A
118,00	108,40	6,40	8,20	10,00	0,50	105,80 x 5,33	XR 105,80x5,33-N80	AF-100-1084118017-1012
122,00	112,40	6,40	8,20	10,00	0,50	110,49 x 5,33	XR 110,49x5,33-N80	STR 19-348/395A
125,00	115,40	6,40	8,20	10,00	0,50	113,67 x 5,33	XR 113,67x5,33-N80	STR 19-349/395A
128,00	115,20	8,40	10,90	13,40	0,60	113,67 x 6,99	XR 113,67x6,99-N80	AF-100-1152138025-1012
130,00	117,20	8,40	10,90	13,40	0,60	116,84 x 6,99	XR 116,84x6,99-N80	AF-100-1172130025-1012
135,00	122,20	8,40	10,90	13,40	0,60	120,02 x 6,99	XR 120,02x6,99-N80	AF-100-1222135025-1012
138,00	125,20	8,40	10,90	13,40	0,60	123,19 x 6,99	XR 123,19x6,99-N80	AF-100-1252138025-1012
140,00	127,20	8,40	10,90	13,40	0,60	126,37 x 6,99	XR 123,67x6,99-N80	AF-100-1272140025-1012
145,00	132,20	8,40	10,90	13,40	0,60	129,54 x 6,99	XR 129,54x6,99-N80	AF-1001322145025-1012
148,00	135,20	8,40	10,90	13,40	0,60	132,72 x 6,99	XR 132,72x6,99-N80	AF-100-1352145025-1012
150,00	137,20	8,40	10,90	13,40	0,60	135,89 x 6,99	XR 135,89x6,99-N80	AF-100-1372150025-1012
155,00	142,20	8,40	10,90	13,40	0,60	139,07 x 6,99	XR 139,07x6,99-N80	AF-100-1422155025-1012
160,00	147,20	8,40	10,90	13,40	0,60	145,42 x 6,99	XR 145,42x6,99-N80	AF-100-1472160025-1012
165,00	152,20	8,40	10,90	13,40	0,60	148,59 x 6,99	XR 148,59x6,99-N80	AF-100-1522165025-1012
170,00	157,20	8,40	10,90	13,40	0,60	155,02 x 6,99	XR 155,02x6,99-N80	AF-100-1572170025-1012
175,00	162,20	8,40	10,90	13,40	0,60	158,12 x 6,99	XR 158,12x6,99-N80	AF-100-1622175025-1012
180,00	167,20	8,40	10,90	13,40	0,60	164,47 x 6,99	XR 164,47x6,99-N80	AF-100-1672180025-1012
185,00	172,20	8,40	10,90	13,40	0,60	167,02 x 6,99	XR 167,02x6,99-N80	AF-100-1722185025-1012
190,00	177,20	8,40	10,90	13,40	0,60	173,52 x 6,99	XR 173,52x6,99-N80	AF-100-1772190025-1012
195,00	182,20	8,40	10,90	13,40	0,60	180,52 x 6,99	XR 180,52x6,99-N80	AF-100-1822195025-1012
200,00	187,20	8,40	10,90	13,40	0,60	183,52 x 6,99	XR 183,52x6,99-N80	AF-100-1872200025-1012
205,00	192,20	8,40	10,90	13,40	0,60	189,87 x 6,99	XR 189,87x6,99-N80	AF-100-1922205025-1012
210,00	197,20	8,40	10,90	13,40	0,60	196,22 x 6,99	XR 196,22x6,99-N80	AF-100-1972210025-1012
215,00	202,20	8,40	10,90	13,40	0,60	199,02 x 6,99	XR 199,02x6,99-N80	AF-100-2022215025-1012
220,00	207,20	8,40	10,90	13,40	0,60	202,57 x 6,99	XR 202,57x6,99-N80	AF-100-2072220025-1012
225,00	212,20	8,40	10,90	13,40	0,60	206,80 x 6,99	XR 206,80x6,99-N80	AF-100-2122225025-1012
230,00	217,20	8,40	10,90	13,40	0,60	215,27 x 6,99	XR 215,27x6,99-N80	AF-100-2172230025-1012
235,00	222,20	8,40	10,90	13,40	0,60	219,02 x 6,99	XR 219,02x6,99-N80	AF-100-2222235025-1012
240,00	227,20	8,40	10,90	13,40	0,60	223,50 x 6,99	XR 223,50x6,99-N80	AF-100-2272240025-1012
245,00	232,20	8,40	10,90	13,40	0,60	227,97 x 6,99	XR 227,97x6,99-N80	AF-100-2322245025-1012
250,00	237,20	8,40	10,90	13,40	0,60	235,00 x 6,99	XR 235,00x6,99-N80	AF-100-2372250025-1012
255,00	242,20	8,40	10,90	13,40	0,60	240,67 x 6,99	XR 240,67x6,99-N80	AF-100-2422255025-1012
260,00	247,20	8,40	10,90	13,40	0,60	243,02 x 6,99	XR 243,02x6,99-N80	AF-100-2472260025-1012

X-ring
XR

Groove size							Part N.°	
D H8	d h9	E ±0,2	E1 ±0,2	E2 ±0,2	R (max)	di x S	X-Ring Part N.°	Back-up ring Part N.°
265,00	252,20	8,40	10,90	13,40	0,60	248,00 x 6,99	XR 248,00x6,99-N80	AF-100-2522265025-1012
270,00	257,20	8,40	10,90	13,40	0,60	253,57 x 6,99	XR 253,57x6,99-N80	AF-100-2572270025-1012
280,00	267,20	8,40	10,90	13,40	0,60	266,07 x 6,99	XR 266,07x6,99-N80	AF-100-2672280025-1012
290,00	277,20	8,40	10,90	13,40	0,60	273,10 x 6,99	XR 273,10x6,99-N80	AF-100-2772290025-1012
300,00	287,20	8,40	10,90	13,40	0,60	284,00 x 6,99	XR 284,00x6,99-N80	AF-100-2872300025-1012
310,00	297,20	8,40	10,90	13,40	0,60	291,47 x 6,99	XR 291,47x6,99-N80	AF-100-2972310025-1012
320,00	307,20	8,40	10,90	13,40	0,60	304,17 x 6,99	XR 304,17x6,99-N80	AF-100-3072320025-1012
330,00	317,20	8,40	10,90	13,40	0,60	316,87 x 6,99	XR 316,87x6,99-N80	AF-100-3172330025-1012
340,00	327,20	8,40	10,90	13,40	0,60	323,50 x 6,99	XR 323,50x6,99-N80	AF-100-2272340025-1012
350,00	337,20	8,40	10,90	13,40	0,60	329,57 x 6,99	XR 329,57x6,99-N80	AF-100-3372350025-1012
360,00	347,20	8,40	10,90	13,40	0,60	342,27 x 6,99	XR 342,27x6,99-N80	AF-100-3472360025-1012
370,00	357,20	8,40	10,90	13,40	0,60	354,97 x 6,99	XR 354,97x6,99-N80	AF-100-3572370025-1012
380,00	367,20	8,40	10,90	13,40	0,60	362,50 x 6,99	XR 362,50x6,99-N80	AF-100-457-01-1012
390,00	377,20	8,40	10,90	13,40	0,60	374,00 x 6,99	XR 374,00x6,99-N80	AF-100-3772390025-1012
400,00	387,20	8,40	10,90	13,40	0,60	380,37 x 6,99	XR 380,37x6,99-N80	AF-100-3872400025-1012

Example for ordering X-Ring:

XR 39,64 x 5,33 - N80

- Type
- Nominal ID diameter
- Cross-section
- Standard material

Material Key:

X-Ring
N80 - NBR 80 Shore A
F75 - FPM 75 Shore A
E80 - EPDM 80 Shore A

Example for ordering Back-up Ring AS:

STR 19-113 / 395A

- Type (endless)
- Dash
- Standard material

Example for ordering Back-up Ring AS:

AF-100-0216028014 -1012

- Type (spiral)
- Nominal diameter x 10
- Nominal diameter x 10
- Width x 10
- Standard material

Material Key:

Back-up ring construction
STR (endless) PU

AF-120 (spiral) PTFE

Material Back-up ring
PU - Polyurethane 395A

AF-1012 - PTFE pure
AF-4125 - PTFE glass filled
AF-2426 - PTFE carbon
AF-5640 - PTFE bronze

WARNING: Limits of application stated herein are standard values. They could be individually transgressed with due consideration to respective service conditions. In the event of a large duty cycle, pulsating operation and other complex operational conditions, simultaneous transgression of these values is not recommended. Due to a large variety of service conditions that may arise in course of actual use, the company does not take responsibility of or guarantee the functional accuracy of the individual components. Rights for changes are reserved.

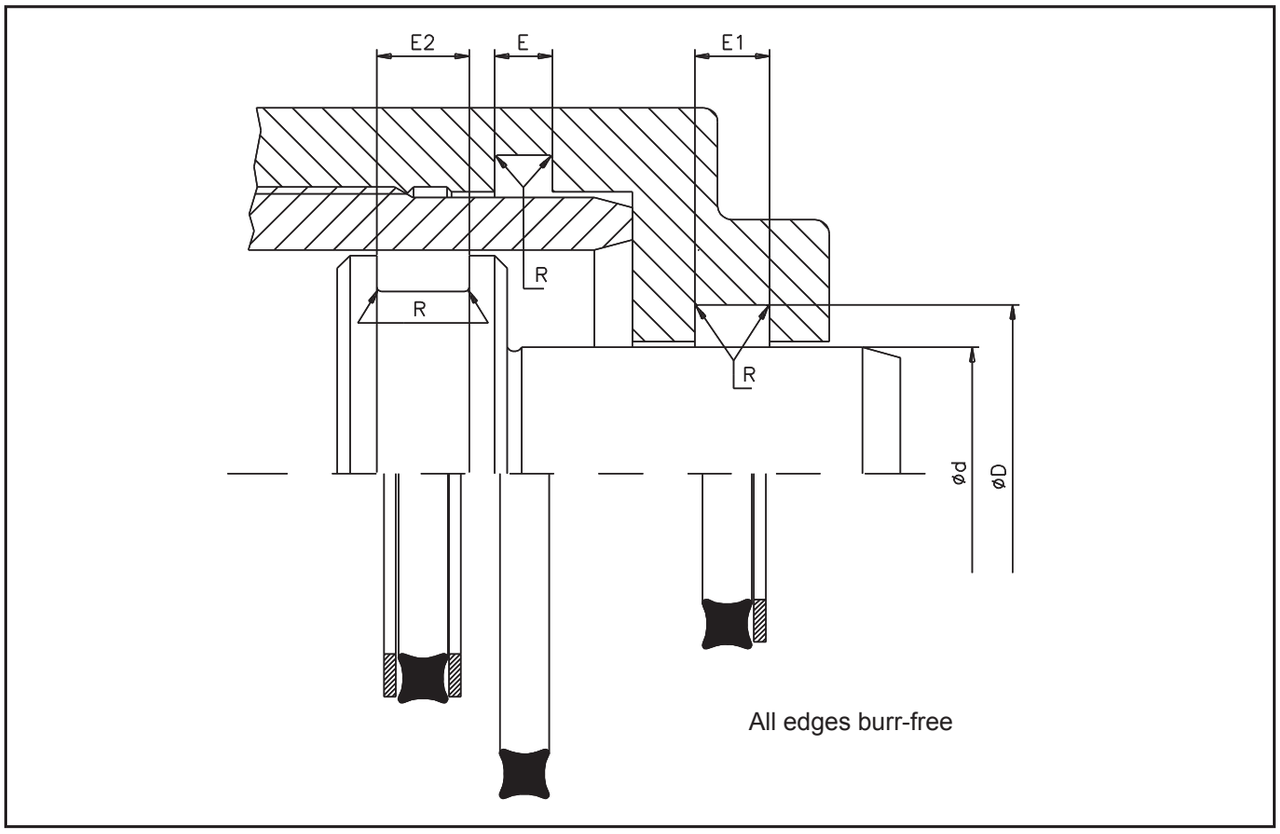

Groove sizes for dynamic internal sealing applications

Groove size							Part N.°	
d f7	D H9	E ±0,2	E1 ±0,2	E2 ±0,2	R (max)	di x S	X-Ring Part N.°	Back-up ring Part N.°
3,00	6,00	2,15	3,65	5,15	0,20	2,90 x 1,78	XR 2,90x1,78-N80	AF-120-0030006014-1012
5,00	8,00	2,15	3,65	5,15	0,20	5,28 x 1,78	XR 5,28x1,78-N80	AF-120-0050008014-1012
6,00	9,00	2,15	3,65	5,15	0,20	6,07 x 1,78	XR 6,07x1,78-N80	STR 19-010/395A
8,00	11,00	2,15	3,65	5,15	0,20	7,66 x 1,78	XR 7,66x1,78-N80	STR 19-011/395A
9,00	12,00	2,15	3,65	5,15	0,20	9,25 x 1,78	XR 9,25x1,78-N80	STR 19-012/395A
9,00	13,50	3,15	4,65	6,15	0,20	9,19 x 2,62	XR 9,19x2,62-N80	STR 19-110/395A
10,00	14,50	3,15	4,65	6,15	0,20	9,80 x 2,62	XR 9,80x2,62-N80	STR 19-110/395A
12,00	16,50	3,15	4,65	6,15	0,20	12,37 x 2,62	XR 12,37x2,62-N80	STR 19-112/395A
14,00	18,50	3,15	4,65	6,15	0,20	13,95 x 2,62	XR 13,95x2,62-N80	STR 19-113/395A
16,00	19,00	2,15	3,65	5,15	0,20	15,60 x 1,78	XR 15,60x1,78-N80	STR 19-016/395A
17,00	21,50	3,15	4,65	6,15	0,20	17,13 x 2,62	XR 17,13x2,62-N80	STR 19-115/395A
20,00	24,50	3,15	4,65	6,15	0,20	20,29 x 2,62	XR 20,29x2,62-N80	STR 19-117/395A
22,00	26,50	3,15	4,65	6,15	0,20	21,89 x 2,62	XR 21,89x2,62-N80	STR 19-118/395A
23,00	27,50	3,15	4,65	6,15	0,20	23,47 x 2,62	XR 23,47x2,62-N80	STR 19-119/395A
25,00	29,50	3,15	4,65	6,15	0,20	25,07 x 2,62	XR 25,07x2,62-N80	STR 19-120/395A
25,00	31,40	4,10	5,60	7,10	0,40	24,99 x 3,53	XR 24,99x3,53-N80	AF-120-0250031414-1012
26,00	32,40	4,10	5,60	7,10	0,40	25,90 x 3,53	XR 25,90x3,53-N80	AF-120-0260032414-1012
27,00	31,50	3,15	4,65	6,15	0,20	26,64 x 2,62	XR 26,64x2,62-N80	STR 19-121/395A
28,00	32,50	3,15	4,65	6,15	0,20	28,24 x 2,62	XR 28,24x2,62-N80	STR 19-122/395A
30,00	36,40	4,10	5,60	7,10	0,40	29,75 x 3,53	XR 29,75x3,53-N80	AF-120-0300036414-1012
32,00	38,40	4,10	5,60	7,10	0,40	32,04 x 3,53	XR 32,04x3,53-N80	AF-120-0320038414-1012

X-ring
XR

Grooove size							Part N.°	
d f7	D H9	E ±0,2	E1 ±0,2	E2 ±0,2	R (max)	di x S	X-Ring Part N.°	Back-up ring Part N.°
34,00	40,40	4,10	5,60	7,10	0,40	33,80 x 3,53	XR 33,80x3,53-N80	AF-120-0340040414-1012
35,00	41,40	4,10	5,60	7,10	0,40	34,52 x 3,53	XR 34,52x3,53-N80	AF-120-0350041414-1012
36,00	42,40	4,10	5,60	7,10	0,40	36,10 x 3,53	XR 36,10x3,53-N80	AF-120-0360042414-1012
38,00	44,40	4,10	5,60	7,10	0,40	37,70 x 3,53	XR 37,70x3,53-N80	AF-120-0380044414-1012
40,00	46,40	4,10	5,60	7,10	0,40	40,87 x 3,53	XR 40,87x3,53-N80	AF-120-0400046414-1012
40,00	49,60	6,40	8,20	10,00	0,50	40,64 x 5,33	XR 40,64x5,33-N80	STR 19-326/395A
42,00	51,60	6,40	8,20	10,00	0,50	41,80 x 5,33	XR 41,80x5,33-N80	AF-120-0420051617-1012
45,00	54,60	6,40	8,20	10,00	0,50	45,04 x 5,33	XR 45,04x5,33-N80	AF-120-0450055617-1012
46,00	55,60	6,40	8,20	10,00	0,50	45,84 x 5,33	XR 45,84x5,33-N80	AF-120-0460055617-1012
47,00	56,60	6,40	8,20	10,00	0,50	46,99 x 5,33	XR 46,99x5,33-N80	STR 19-328/395A
48,00	57,60	6,40	8,20	10,00	0,50	47,80 x 5,33	XR 47,80x5,33-N80	AF-120-0480057617-1012
50,00	59,60	6,40	8,20	10,00	0,50	50,17 x 5,33	XR 50,17x5,33-N80	STR 19-329/395A
52,00	61,60	6,40	8,20	10,00	0,50	52,00 x 5,33	XR 52,00x5,33-N80	AF-120-0520061617-1012
55,00	64,60	6,40	8,20	10,00	0,50	54,50 x 5,33	XR 54,50x5,33-N80	STR 19-330/395A
56,00	65,60	6,40	8,20	10,00	0,50	56,52 x 5,33	XR 56,52x5,33-N80	STR 19-331/395A
58,00	67,60	6,40	8,20	10,00	0,50	57,52 x 5,33	XR 57,52x5,33-N80	AF-120-0580067617-1012
60,00	69,60	6,40	8,20	10,00	0,50	59,69 x 5,33	XR 59,69x5,33-N80	STR 19-332/395A
63,00	72,60	6,40	8,20	10,00	0,50	62,87 x 5,33	XR 62,87x5,33-N80	STR 19-333/395A
65,00	74,60	6,40	8,20	10,00	0,50	64,59 x 5,33	XR 64,59x5,33-N80	AF-120-0650074617-1012
70,00	79,60	6,40	8,20	10,00	0,50	69,22 x 5,33	XR 69,22x5,33-N80	STR 19-335/395A
75,00	84,60	6,40	8,20	10,00	0,50	75,57 x 5,33	XR 75,57x5,33-N80	AF-120-0750084617-1012
80,00	89,60	6,40	8,20	10,00	0,50	80,09 x 5,33	XR 80,09x5,33-N80	STR 19-338/395A
85,00	94,60	6,40	8,20	10,00	0,50	85,09 x 5,33	XR 85,09x5,33-N80	STR 19-340/395A
95,00	104,60	6,40	8,20	10,00	0,50	94,62 x 5,33	XR 94,62x5,33-N80	STR 19-343/395A
105,00	114,60	6,40	8,20	10,00	0,50	105,80 x 5,33	XR 105,80x5,33-N80	STR 19-346/395A
110,00	119,60	6,40	8,20	10,00	0,50	110,49 x 5,33	XR 110,49x5,33-N80	STR 19-623/395A
115,00	127,80	8,40	10,90	13,40	0,60	115,84 x 6,99	XR 115,84x6,99-N80	AF-120-1150127825-1012
120,00	132,80	8,40	10,90	13,40	0,60	120,02 x 6,99	XR 120,02x6,99-N80	AF-120-1200132825-1012
125,00	137,80	8,40	10,90	13,40	0,60	126,37 x 6,99	XR 126,37x6,99-N80	AF-120-1250137825-1012
130,00	142,80	8,40	10,90	13,40	0,60	129,54 x 6,99	XR 129,54x6,99-N80	AF-120-1300142825-1012
135,00	147,80	8,40	10,90	13,40	0,60	135,89 x 6,99	XR 135,89x6,99-N80	AF-120-1350147825-1012
140,00	152,80	8,40	10,90	13,40	0,60	139,07 x 6,99	XR 139,07x6,99-N80	AF-120-1400152825-1012
145,00	157,80	8,40	10,90	13,40	0,60	145,42 x 6,99	XR 145,42x6,99-N80	AF-120-1450157825-1012
150,00	162,80	8,40	10,90	13,40	0,60	151,77 x 6,99	XR 151,77x6,99-N80	AF-120-1500162825-1012
155,00	167,80	8,40	10,90	13,40	0,60	155,02 x 6,99	XR 155,02x6,99-N80	AF-120-1550167825-1012
158,00	170,80	8,40	10,90	13,40	0,60	158,12 x 6,99	XR 158,12x6,99-N80	AF-120-1580170825-1012
160,00	172,80	8,40	10,90	13,40	0,60	161,02 x 6,99	XR 161,02x6,99-N80	AF-120-1600172825-1012
165,00	177,80	8,40	10,90	13,40	0,60	164,47 x 6,99	XR 164,47x6,99-N80	AF-120-1650177825-1012
170,00	182,80	8,40	10,90	13,40	0,60	170,82 x 6,99	XR 170,82x6,99-N80	AF-120-1700182825-1012
175,00	187,80	8,40	10,90	13,40	0,60	173,52 x 6,99	XR 173,52x6,99-N80	AF-120-1750187825-1012
180,00	192,80	8,40	10,90	13,40	0,60	180,52 x 6,99	XR 180,52x6,99-N80	AF-120-1800192825-1012
185,00	197,80	8,40	10,90	13,40	0,60	186,02 x 6,99	XR 186,02x6,99-N80	AF-120-1850197825-1012
190,00	202,80	8,40	10,90	13,40	0,60	189,87 x 6,99	XR 189,87x6,99-N80	AF-120-1900202825-1012
195,00	207,80	8,40	10,90	13,40	0,60	196,22 x 6,99	XR 196,22x6,99-N80	AF-120-1950207825-1012
200,00	212,80	8,40	10,90	13,40	0,60	199,02 x 6,99	XR 199,02x6,99-N80	AF-120-2000212825-1012
205,00	217,80	8,40	10,90	13,40	0,60	206,80 x 6,99	XR 206,80x6,99-N80	AF-120-2050217825-1012
210,00	222,80	8,40	10,90	13,40	0,60	211,02 x 6,99	XR 211,02x6,99-N80	AF-120-2100222825-1012
215,00	227,80	8,40	10,90	13,40	0,60	215,27 x 6,99	XR 215,27x6,99-N80	AF-120-2150227825-1012
220,00	232,80	8,40	10,90	13,40	0,60	219,02 x 6,99	XR 219,02x6,99-N80	AF-120-2200232825-1012
230,00	242,80	8,40	10,90	13,40	0,60	227,97 x 6,99	XR 227,97x6,99-N80	AF-120-2300242825-1012
240,00	252,80	8,40	10,90	13,40	0,60	240,67 x 6,99	XR 240,67x6,99-N80	AF-120-2400252825-1012
250,00	262,80	8,40	10,90	13,40	0,60	248,00 x 6,99	XR 248,00x6,99-N80	AF-120-2500262825-1012
260,00	272,80	8,40	10,90	13,40	0,60	259,00 x 6,99	XR 259,00x6,99-N80	AF-120-2600272825-1012
270,00	282,80	8,40	10,90	13,40	0,60	266,07 x 6,99	XR 266,07x6,99-N80	AF-120-2700282825-1012
280,00	292,80	8,40	10,90	13,40	0,60	278,77 x 6,99	XR 278,77x6,99-N80	AF-120-2800292825-1012
290,00	302,80	8,40	10,90	13,40	0,60	291,47 x 6,99	XR 291,47x6,99-N80	AF-120-2900302825-1012
300,00	312,80	8,40	10,90	13,40	0,60	298,00 x 6,99	XR 298,00x6,99-N80	AF-120-3000312825-1012
310,00	322,80	8,40	10,90	13,40	0,60	310,00 x 6,99	XR 310,00x6,99-N80	AF-120-3100322825-1012
320,00	332,80	8,40	10,90	13,40	0,60	316,87 x 6,99	XR 316,87x6,99-N80	AF-120-3200332825-1012

X-ring
XR

Groove size							Part N.°	
d f7	D H9	E ±0,2	E1 ±0,2	E2 ±0,2	R (max)	di x S	X-Ring Part N.°	Back-up ring Part N.°
330,00	342,80	8,40	10,90	13,40	0,60	329,57 x 6,99	XR 329,57x6,99-N80	AF-120-3300342825-1012
340,00	352,80	8,40	10,90	13,40	0,60	336,50 x 6,99	XR 336,50x6,99-N80	AF-120-3400352825-1012
350,00	362,80	8,40	10,90	13,40	0,60	348,50 x 6,99	XR 348,50x6,99-N80	AF-120-3500362825-1012
360,00	372,80	8,40	10,90	13,40	0,60	362,50 x 6,99	XR 362,50x6,99-N80	AF-120-3600372825-1012
370,00	382,80	8,40	10,90	13,40	0,60	367,67 x 6,99	XR 367,67x6,99-N80	AF-120-3700382825-1012
380,00	392,80	8,40	10,90	13,40	0,60	380,37 x 6,99	XR 380,37x6,99-N80	AF-120-3800392825-1012
390,00	402,80	8,40	10,90	13,40	0,60	393,07 x 6,99	XR 393,07x6,99-N80	AF-120-3900402825-1012
400,00	412,80	8,40	10,90	13,40	0,60	401,00 x 6,99	XR 401,00x6,99-N80	AF-120-4000412825-1012

Example for ordering X-Ring :

XR 25,07 x 2,62 - N80

- Type
- Nominal ID diameter
- Cross-section
- Standard material

Material Key:

X-Ring
N80 - NBR 80 Shore A
F75 - FPM 75 Shore A
E80 - EPDM 80 Shore A

Example for ordering Back Ring:

STR 19-118 / 395A

- Type (endless)
- Dash No
- Standard material

Example for ordering Back Ring:

AF-120-2150227825-1012

- Profile (endless)
- Nominal diameter x 10
- Nominal diameter x 10
- Width x10
- Standard material

Material Key:

Back-up ring construction
STR (endless) Pu

AF-120 (endless)
AF-110 (split)

Material Back-up Ring
PU-Polyurethane 395A

AF-1012 - PTFE virgin
AF-4115 - PTFE glass filled
AF-2426 - PTFE carbon
AF-5640 - PTFE bronze

WARNING: Limits of application stated herein are standard values. They could be individually transgressed with due consideration to respective service conditions. In the event of a large duty cycle, pulsating operation and other complex operational conditions, simultaneous transgression of these values is not recommended. Due to a large variety of service conditions that may arise in course of actual use, the company does not take responsibility of or guarantee the functional accuracy of the individual components. Rights for changes are reserved.

Accofluor A/S
product index

Profile	Type	Specification	Limitations of Use Temperature	Material Sealing element	Page
	STR	Back-up ring Single solid	-40 up to +110° C	Polyurethane	267-70
	STR 19	Back-up ring Single solid (for ASA 568 O-rings)	-40 up to +110° C	Polyurethane	267-70
	AF-120	Back-up ring Single solid	-60 up to +280° C	PTFE Compound	267-70
	AF-110	Splitted back-up ring	-60 up to +280° C	PTFE Compound	267-70
	AF-100	Spiral back-up ring	-60 up to +280° C	PTFE Compound	267-70
	AF-140 AF-150	Back-up ring Single solid Back-up ring Single slotted	-60 up to +280° C	PTFE Compound	267-70

Regarding the great variety of practice applications please ask our customer service department personally for missing types or dimensions

Back-up Ring

Back-up rings are used with static as well dynamic applications. However, they have no sealing function. Extrusion of O-rings or X-Ring under the influence of presssure should be avoided with the back-up ring. Manufacture of back-up rings in various materials is possible.

Special Features:

- Simple groove geometry
- Easy assembly
- Multitude of materials of construction
- Individual sizes possible
- Bridging of large sealing gaps
- High areas of temperature
- Neutral to temperature fluctuations

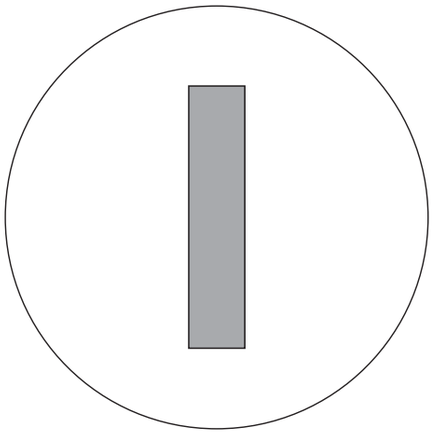

Operational pressure : Up to 200 MPa (2000 bar)
Temperature : depending on material -60 °C to + 280 °C

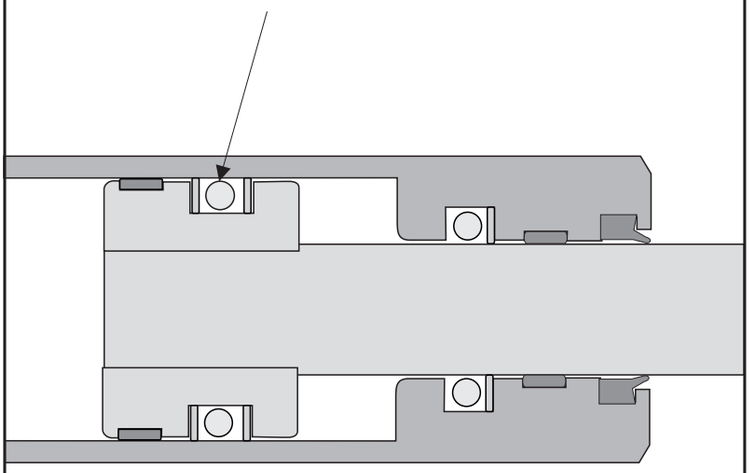

Back-up Ring

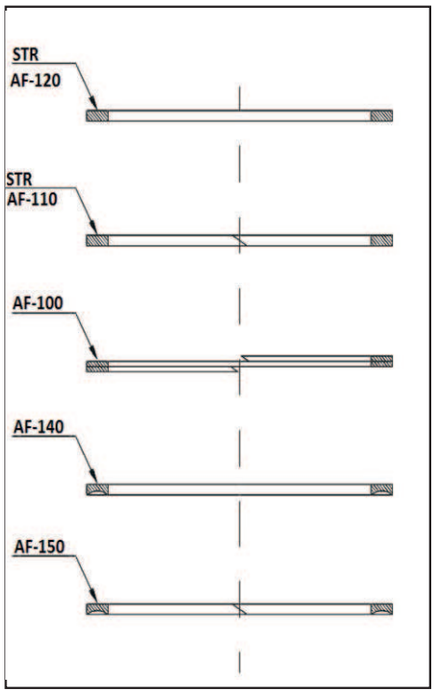

We recommend the use of back up rings for one ore more of following conditions in service:

- pressure over 5 MPa (50 bar)
- larger sealing splits
- higher stroke frequency
- high temperature fluctuations
- pulsating pressures

STR (recommended assembly / mounting sizes for O-rings)

Back-up rings of the STR series are produced from special polyurethane elastomer by special process. The material - hardness 95 shore A - has excellent extrusion resistance. It is, however, possible to use endlessly manufactured back up rings for external sealing applications due to their
Memory effect. These back-up rings are meant for automatic assembly. Special anti-ageing additives in the material are also effective in dry air and oil.

AF-100, 110, 120, 140 and AF-150

Rings of this series are produced by turning, and we recommend specific explanations according to specific applications (see below)

Part	design	application
STR	endless	internal/external sealing static
AF-120	endless	internal/external sealing dynamic
STR	slotted	internal/external sealing static
AF-110	slotted	internal/external sealing dynamic
AF-110	slotted	internal/external sealing static
AF-100	spiral	internal/external sealing static
AF-100	spiral	internal/external sealing dynamic

AF-140	concave (endless)	internal/external sealing static
AF-140	concave (endless)	internal/external sealing dynamic
AF-150	concave (slotted)	internal/external sealing static
AF-150	concave (slotted)	internal/external sealing dynamic

Material overview back up rings:

AF-1012 - Virgin PTFE
AF-1022 - PTFE with additive
AF-2426 - PTFE with carbon
AF-4125 - PTFE with glassfiber
AF-5640 - PTFE with bronze/additive

Back-up Ring

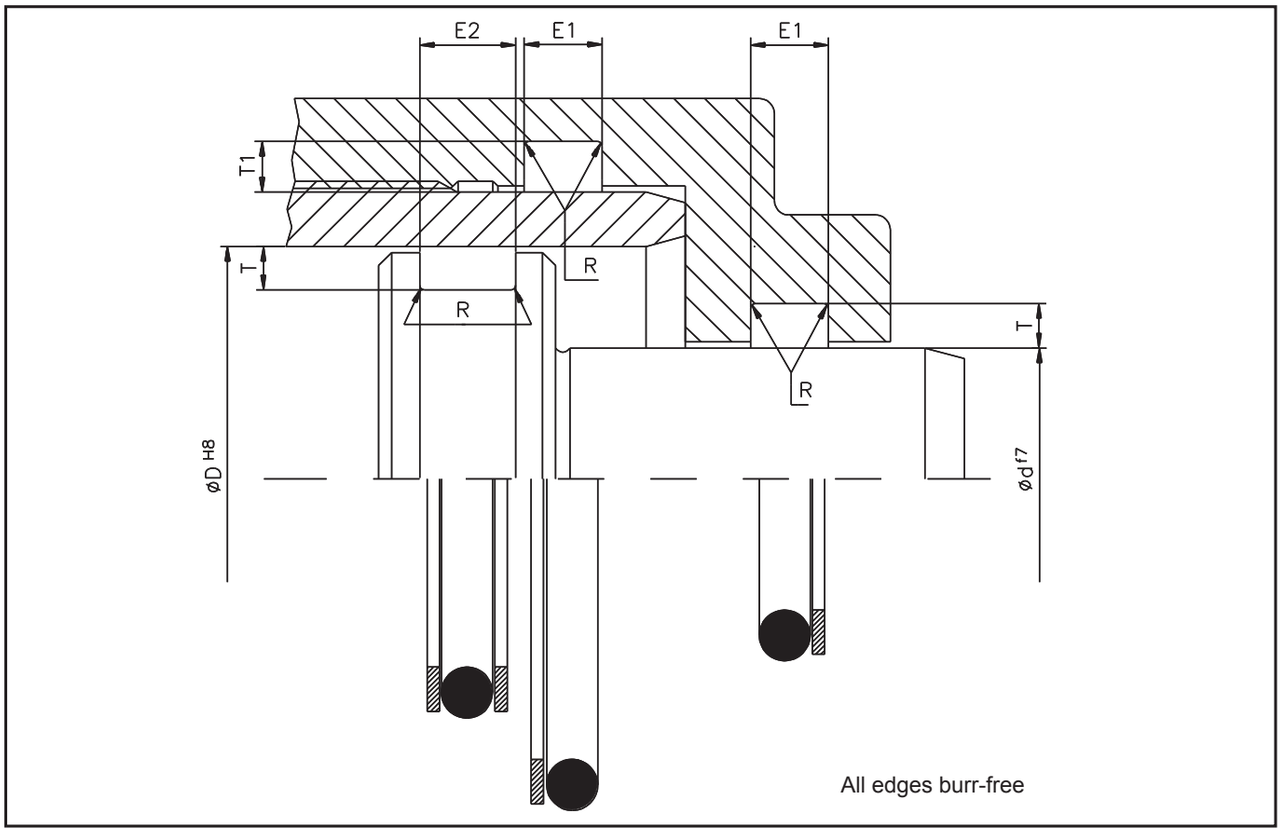

Groove sizes for back-up rings from PTFE

O-Ring cord	dynamic	static	1 back ring	2 back ring	Radius
S	T ±0,05	T1 ±0,05	E1 ±0,2	E2 ±0,2	R (max)
1,50	1,25	1,10	3,00	4,00	0,20
1,60	1,30	1,20	3,10	4,10	0,20
1,78	1,50	1,30	4,00	5,50	0,20
1,90	1,55	1,40	4,10	5,60	0,20
2,00	1,70	1,60	4,20	5,70	0,20
2,40	2,00	1,90	4,70	6,20	0,20
2,50	2,15	1,95	4,80	6,30	0,20
2,62	2,25	2,10	5,00	6,50	0,20
2,70	2,40	2,10	5,10	6,60	0,20
3,00	2,50	2,40	5,50	7,00	0,30
3,50/3,53	3,05	2,95	6,00	7,50	0,40
3,60	3,15	2,95	6,20	7,70	0,40
4,00	3,50	3,30	6,50	8,00	0,40
4,50	4,00	3,60	7,60	9,40	0,40
5,00	4,40	4,10	8,30	10,10	0,50
5,33	4,70	4,50	8,80	10,60	0,50
5,70	5,00	4,85	9,10	10,90	0,50
6,00	5,40	4,90	9,30	11,10	0,60
6,99/7,00	6,10	5,90	12,00	14,50	0,60
8,00	7,10	6,90	12,90	15,40	0,60
8,40	7,50	7,25	13,50	16,00	0,60
9,00	8,10	7,60	14,20	16,70	0,60
10,00	9,00	8,00	15,50	18,00	0,60

Back-up Ring

Example for ordering Internal static Back Ring (endless):

AF-120 - 0150017614 - 1012

Typel
Nominal diameter x 10
Nominal diameter x 10
Width x 10
Standard material

Example for ordering external static Back Ring (concave-split):

AF-140 - 0250029214 - 1012

Type
Nominal diameter x 10
Nominal diameter
Width x 10
Standard material

Material Key:
Back ring

STR and STR 19-Dash:
PU -PolyurethaneY95A and 395A (see O-rings)

AF-1012 - Virgin PTFE
AF-2426 - PTFE with carbon
AF-4125 - PTFE with glassfiber
AF-5640 - PTFE with bronze/additive

WARNING: Limits of application stated herein are standard values. They could be individually transgressed with due consideration to respective service conditions. In the event of a large duty cycle, pulsating operation and other complex operational conditions, simultaneous transgression of these values is not recommended. Due to a large variety of service conditions that may arise in course of actual use, the company does not take responsibility of or guarantee the functional accuracy of the individual components. Rights for changes are reserved.

product index

Profile	Type	Specification	Limitations of Use			Material	
			Temperature	Pressure	Velocity	Sealing element	Page
	AF-523	Double acting outside with O-ring	-40 up to +200° C	up to 40 MPa (400 bar)	up to 1-2 m/s	PTFE Compound	272
	AF-423	Double acting inside with O-ring	-40 up to +200° C	up to 40 MPa (400 bar)	up to 1-2 m/s	PTFE Compound	276
	AF-610R	Single acting inside with spring	-150 up to +250° C	up to 10 MPa (100 bar)	up to 2 m/s	PTFE Compound	280
	AF-910	Radial lip seal with PTFE lip	-20 up to +250° C	up to 3 MPa (30 bar)	up to 30 m/s	PTFE Compound	283
	V-Ring	V - ring outside axial	-60 up to +220° C		up to 8 m/s	NBR	288
	CB	Radial lip seal	-60 up to +220° C	up to 0,05 MPa (0,5 bar)	up to 14 m/s	NBR	297
	CC	Radial lip seal with dust lip	-60 up to +220° C	up to 0,05 MPa (0,5 bar)	up to 14 m/s	NBR	297
	DB	Radial seal metal caged outside	-60 up to +220° C	up to 0,05 MPa (0,5 bar)	up to 14 m/s	NBR	297
	DC	Radial seal with lip and metal caged outside	-60 up to +220° C	up to 0,05 MPa (0,5 bar)	up to 14 m/s	NBR	297
	BB	Radial seal	-60 up to +220° C	up to 0,05 MPa (0,5 bar)	up to 14 m/s	NBR	297
	BC	Radial seal with lip	-60 up to +220° C	up to 0,05 MPa (0,5 bar)	up to 14 m/s	NBR	297
	CC-P	Radial seal with lip	-60 up to +220° C	up to 0,8 MPa (8 bar)	up to 14 m/s	NBR	297
	DINA	Radial seal	-60 up to +220° C		up to 14 m/s	NBR	297

Regarding the great variety of practice applications please ask our customer service department personally for missing types or dimensions

Swivel seal piston
AF-523

The seal AF-523 has been specially designed for sealing of swivel or rotary transmissions. This double acting sealing system is used in cases of external sealing. It has a particularly versatile range of materials to serve respecitve applications.

Special Features:

- low friction and very low wear
- reduced stick slip tendency even at low velocity
- high extrusion to temperature
- very high resistance of temperature
- small assembly dimensions
- suitability to almost any media concerning the PTFE part and a possibility of variation of O-ring material

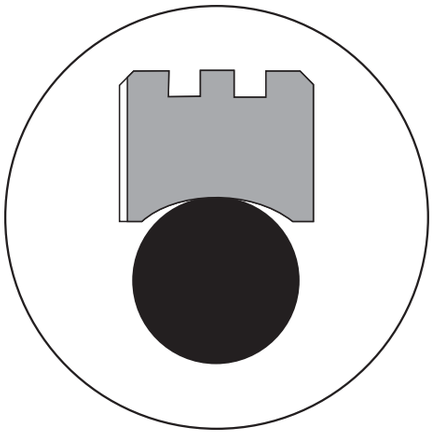

Material	:	PTFE-Compound
Operational pressure	:	up to 40 MPa (400 bar)
Velocity	:	rotary to 0,5-2 m/s
Temperature	:	-40 up to +200 °C

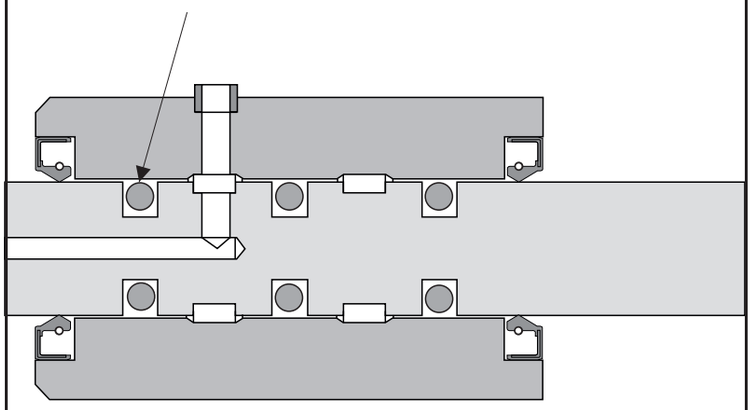

Swivel seal piston
AF-523

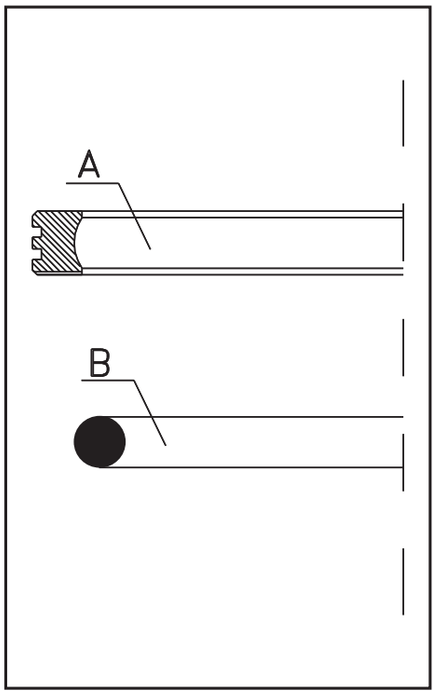

Swivel seal (Part A)

The swivel seal cross section has been specially designed taking into account the slow raidal movement or slow rotating . The dynamic side is corner that can provided with a small chamfer to simplify assembly and also to get through the extrusion a stronger corner as can withstand higher pressure and ensures a secure not extrude out through extrusion gap. The radius on the inner diameter ensures and secure fit for the pre-stressing element. The expanded frictional area between O-ring and the profile ring also curtails relative movement with respect to each other. Depending of the cross-section of the seal, there may be none, one or two grooves made on the dynamic side.

O-ring (Part B)

O-rings are standard sealing elements with circular cross section. Those used in the present application conform to the series of dimensions as per AS 568 A (American norms). Standard MOC for hydraulics applications is NBR, which guarantees particularly good restistance to hydraulic fluids. To use O-rings with hardness of 70 Shore A is to preferred.

Material overview: Swivel seal

AF-4115: PTFE with Glass fibre/lubricant - high abrasion resistance and inherent stability, good chemical resistance, used in various areas of industry and intermediatestress hydraulic applications.
AF-2426: PTFE with Carbon: good abrasion resistance and inherent stability, good chemical resistance, used in water and water-oil emulsions with intermediate stress. Also designed for dry runs.
AF-2413: PTFE with Carbon Fibre: very good abrasion resistance and inherent stability. Used in hydraulics, also intended for dry runs.
AF-1111: PTFE with Econol - very high abrasion resistance and inherent stability, used in hydraulics and abrasive pressure fluid applications.
AF-7710: PEHD 1000 - very high abrasion resistance and inherent stability, has a strong lip, with very good scraper effect. Has a limit in temperature maximum 80°C

Material overview: O-Rings

N: Acrylnitrile-Butadiene-Rubber - Used in general machine constructions, hydraulics, pneumatics. Resistant to mineral oil based pressure fluids, HFA, HFB and HFC fluids and water.

F: Fluorine-containing Rubbers - Used at high temperatures and aggressive surrounding media, resistant to mineral based and synthetic pressure fluids, aliphatic, aromatic and chlorated hydrocarbons, phosphate-ester based poorly inflammable fluids.

E: Ethylene-Propylene-Diene Rubbers - Used in valve and pump industry. Resistant to hot water, steam, phosphate-ester based poorly inflammable fluids , but is not resistant to mineral oils.

S: Silicone-Rubbers

C: Chloroprene-Rubbers

Swivel seal piston
AF-523

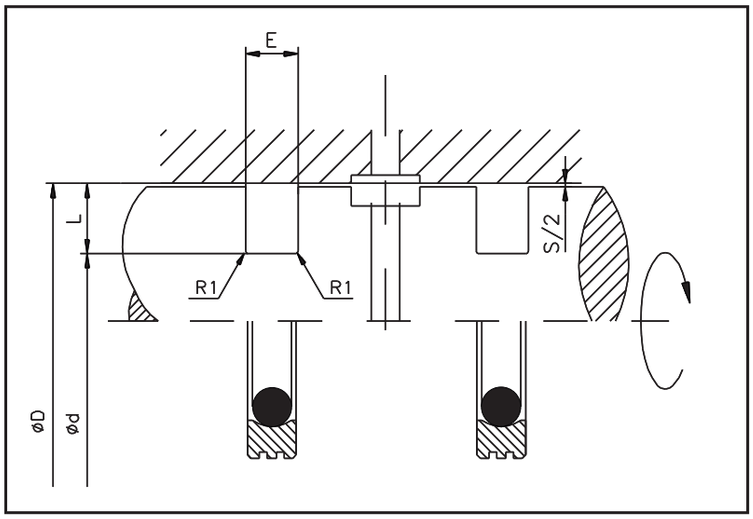

Limitations of Use

Operational pressure : up to 40 MPa (400 bar)
Velocity : rotary to 2 m/s
Temperature : -40 up to +200 °C
(depending on O-ring material)

Media for Use

Mineral oil based pressure fluids, flame resistant fluids (HFA,HFB, HFC,) bio oils, water, air and other media depending on O-ring material

Surface Finish

Surface	Rmax	Rz	Ra
Housing bore D	2,5 µm	1,6 µm	0,4 µm
Groove diameter	10,0 µm	6,3 µm	1,6 µm
Groove flanks	16,0 µm	10,0 µm	3,2 µm

Surface hardness ≥ 55 HRC;
Depth of hardness ≥ 0,3 mm

Preferred assembly dimensions

Section	O-Ring cross-section mm	Recommend Diameter Standard d mm	Groove Width E mm	Groove Depth L mm	Max.Diameter Clearance S 0 - 150 bar mm	Max.Diameter Clearance S 150 - 300 bar mm	Radius R1 max. mm
A	1,78	8,0 - 39,9	2,2	2,45	0,4 - 0,2	0,2 - 0,1	0,5
B	2,62	40,0 - 79,9	3,2	3,75	0,6 - 0,3	0,3 - 0,2	0,7
C	3,53	80,0 - 132,9	4,2	5,50	0,8 - 0,4	0,4 - 0,2	1,2
D	5,33	133,0 - 329,9	6,3	7,75	1,0 - 0,5	0,5 - 0,3	1,5
E	7,00	330,0 - 669,9	8,1	10,50	1,0 - 0,5	0,5 - 0,3	1,5
F	8,40	670,0 - 999,9	9,5	14,00	1,0 - 0,5	0,5 - 0,3	2,0

D H9	d h10	E +0,2	O-Ring	Part N°.
8,00	3,10	2,20	006	AF-523-0080-A-xxxxN
10,00	5,10	2,20	009	AF-523-0100-A-xxxxN
12,00	7,10	2,20	011	AF-523-0120-A-xxxxN
14,00	9,10	2,20	012	AF-523-0140-A-xxxxN
15,00	10,10	2,20	012	AF-523-0150-A-xxxxN
16,00	11,10	2,20	013	AF-523-0160-A-xxxxN
18,00	13,10	2,20	014	AF-523-0180-A-xxxxN
20,00	15,10	2,20	016	AF-523-0200-A-xxxxN
22,00	17,10	2,20	017	AF-523-0220-A-xxxxN
24,00	19,10	2,20	018	AF-523-0240-A-xxxxN
25,00	20,10	2,20	019	AF-523-0250-A-xxxxN
28,00	23,10	2,20	021	AF-523-0280-A-xxxxN
30,00	25,10	2,20	022	AF-523-0300-A-xxxxN
32,00	27,10	2,20	023	AF-523-0320-A-xxxxN
35,00	30,10	2,20	025	AF-523-0350-A-xxxxN
38,00	33,10	2,20	027	AF-523-0380-A-xxxxN
39,00	34,10	2,20	027	AF-523-0390-A-xxxxN
40,00	32,50	3,20	125	AF-523-0400-B-xxxxN
42,00	34,50	3,20	126	AF-523-0420-B-xxxxN
45,00	37,50	3,20	128	AF-523-0450-B-xxxxN
48,00	40,50	3,20	130	AF-523-0480-B-xxxxN
50,00	42,50	3,20	131	AF-523-0500-B-xxxxN
52,00	44,50	3,20	132	AF-523-0520-B-xxxxN
55,00	47,50	3,20	134	AF-523-0550-B-xxxxN
60,00	52,50	3,20	137	AF-523-0600-B-xxxxN

D H9	d h10	E +0,2	O-Ring	Part N°.
63,00	55,50	3,20	139	AF-523-0630-B-xxxxN
64,00	56,50	3,20	140	AF-523-0640-B-xxxxN
65,00	57,50	3,20	140	AF-523-0650-B-xxxxN
70,00	62,50	3,20	144	AF-523-0700-B-xxxxN
75,00	67,50	3,20	147	AF-523-0750-B-xxxxN
80,00	69,00	4,20	232	AF-523-0800-C-xxxxN
85,00	74,00	4,20	233	AF-523-0850-C-xxxxN
89,00	78,00	4,20	235	AF-523-0890-C-xxxxN
90,00	79,00	4,20	235	AF-523-0900-C-xxxxN
95,00	84,00	4,20	236	AF-523-0950-C-xxxxN
100,00	89,00	4,20	238	AF-523-1000-C-xxxxN
105,00	94,00	4,20	240	AF-523-1050-C-xxxxN
110,00	99,00	4,20	241	AF-523-1100-C-xxxxN
115,00	104,00	4,20	243	AF-523-1150-C-xxxxN
120,00	109,00	4,20	244	AF-523-1200-C-xxxxN
125,00	114,00	4,20	246	AF-523-1250-C-xxxxN
127,00	116,00	4,20	246	AF-523-1270-C-xxxxN
130,00	119,00	4,20	248	AF-523-1320-C-xxxxN
132,00	121,00	4,20	247	AF-523-1300-C-xxxxN
135,00	119,50	6,30	351	AF-523-1350-D-xxxxN
140,00	124,50	6,30	352	AF-523-1400-D-xxxxN
145,00	129,50	6,30	354	AF-523-1450-D-xxxxN
150,00	134,50	6,30	355	AF-523-1500-D-xxxxN
154,00	138,50	6,30	356	AF-523-1540-D-xxxxN

Swivel seal piston
AF-523

D H9	d h10	E +0,2	O-Ring	Part N°.
160,00	144,50	6,30	358	AF-523-1600-D-xxxxN
165,00	149,50	6,30	359	AF-523-1650-D-xxxxN
170,00	154,50	6,30	361	AF-523-1700-D-xxxxN
175,00	159,50	6,30	362	AF-523-1750-D-xxxxN
180,00	164,50	6,30	363	AF-523-1800-D-xxxxN
190,00	174,50	6,30	364	AF-523-1900-D-xxxxN
200,00	184,50	6,30	366	AF-523-2000-D-xxxxN
210,00	194,50	6,30	367	AF-523-2100-D-xxxxN
220,00	204,50	6,30	369	AF-523-2200-D-xxxxN
230,00	214,50	6,30	370	AF-523-2300-D-xxxxN
240,00	224,50	6,30	372	AF-523-2400-D-xxxxN
250,00	234,50	6,30	374	AF-523-2500-D-xxxxN
260,00	244,50	6,30	375	AF-523-2600-D-xxxxN
270,00	254,50	6,30	377	AF-523-2700-D-xxxxN
280,00	264,50	6,30	377	AF-523-2800-D-xxxxN
290,00	274,50	6,30	378	AF-523-2900-D-xxxxN
300,00	284,50	6,30	379	AF-523-3000-D-xxxxN
310,00	294,50	6,30	380	AF-523-3100-D-xxxxN
320,00	304,50	6,30	381	AF-523-3200-D-xxxxN
330,00	309,00	8,10	453	AF-523-3300-E-xxxxN
340,00	319,00	8,10	454	AF-523-3400-E-xxxxN
350,00	329,00	8,10	455	AF-523-3500-E-xxxxN
360,00	339,00	8,10	456	AF-523-3600-E-xxxxN
370,00	349,00	8,10	456	AF-523-3700-E-xxxxN
380,00	359,00	8,10	457	AF-523-3800-E-xxxxN
390,00	369,00	8,10	458	AF-523-3900-E-xxxxN
400,00	379,00	8,10	458	AF-523-4000-E-xxxxN

D H9	d h10	E +0,2	O-Ring	Part N°.
410,00	389,00	8,10	459	AF-523-4100-E-xxxxN
420,00	399,00	8,10	460	AF-523-4200-E-xxxxN
430,00	409,00	8,10	461	AF-523-4300-E-xxxxN
440,00	419,00	8,10	462	AF-523-4400-E-xxxxN
450,00	429,00	8,10	463	AF-523-4500-E-xxxxN
460,00	439,00	8,10	463	AF-523-4600-E-xxxxN
470,00	449,00	8,10	464	AF-523-4700-E-xxxxN
480,00	459,00	8,10	465	AF-523-4800-E-xxxxN
490,00	469,00	8,10	466	AF-523-4900-E-xxxxN
500,00	479,00	8,10	467	AF-523-5000-E-xxxxN
510,00	489,00	8,10	467	AF-523-5100-E-xxxxN
520,00	499,00	8,10	468	AF-523-5200-E-xxxxN
530,00	509,00	8,10	469	AF-523-5300-E-xxxxN
540,00	519,00	8,10	469	AF-523-5400-E-xxxxN
550,00	529,00	8,10	470	AF-523-5500-E-xxxxN
560,00	539,00	8,10	470	AF-523-5600-E-xxxxN
570,00	549,00	8,10	470	AF-523-5700-E-xxxxN
580,00	559,00	8,10	471	AF-523-5800-E-xxxxN
590,00	569,00	8,10	471	AF-523-5900-E-xxxxN
600,00	579,00	8,10	471	AF-523-6000-E-xxxxN
610,00	589,00	8,10	472	AF-523-6100-E-xxxxN
620,00	599,00	8,10	472	AF-523-6200-E-xxxxN
630,00	609,00	8,10	473	AF-523-6300-E-xxxxN
640,00	619,00	8,10	473	AF-523-6400-E-xxxxN
650,00	629,00	8,10	473	AF-523-6500-E-xxxxN
660,00	639,00	8,10	474	AF-523-6600-E-xxxxN

Further and intermediate sizes up to Ø 2500 mm available on request.

Example for ordering:

AF-523 - 0360 - C - 7720N

- Type
- Nominal diameter x 10
- Cross section
- Standard material swivel seal
- Standard material O-Ring

Material Key:

Swivel seal
- AF-4115 - PTFE glass fibre
- AF-2426 - PTFE carbon
- AF-1111 - modified PTFE
- AF-2413 - PTFE carbon fibre

O-Ring materials
- N - NBR
- F - FPM
- E - EPDM
- S - Silicone
- C - Chloroprene

WARNING: Limits of application stated herein are standard values. They could be individually transgressed with due consideration to respective service conditions. In the event of a large duty cycle, pulsating operation and other complex operational conditions, simultaneous transgression of these values is not recommended. Due to a large variety of service conditions that may arise in course of actual use, the company does not take responsibility of or guarantee the functional accuracy of the individual components. Rights for changes are reserved.

Swivel seal rod
AF-423

AF-423 series has been specially designed for use in sealing of swivel or rotary transmissions.This double acting sealing system is used in cases of internal sealing. It has a particularly versatile range of materials to serve respective applications.

Special Features:

- low friction and very low wear
- reduced stick slip tendency even at low velocity
- high extrusion durability
- small fitting dimensions
- suitability to almost all medias concerning the PTFE part and a possibility of variation with O-ring

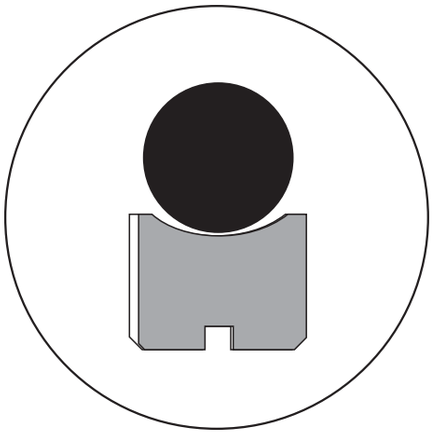

Material : PTFE-Compound
Operational pressure upt to 40 MPa (400 bar)
Velocity : rotary to 0,5-2 m/s
Temperature : -40 up to +200 °C

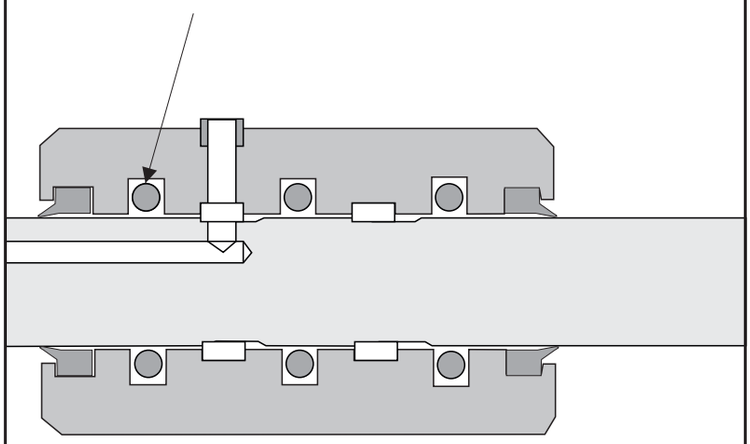

Swivel seal rod
AF-423

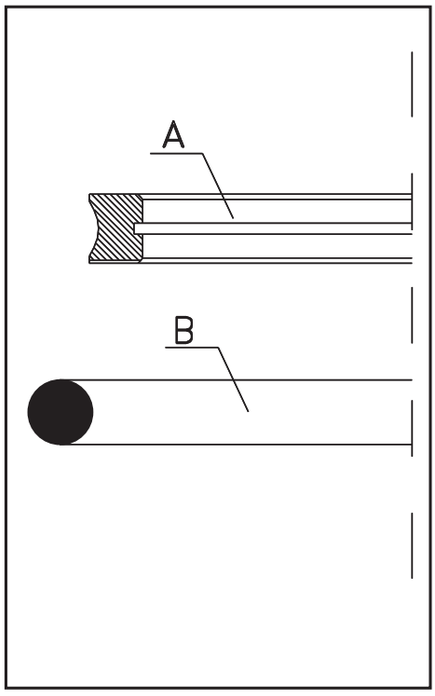

Swivel seal (Part A)

Swivel seal cross section has been specially designed taking into account the turning action. The dynamic side is provided with a small chamfer to simplify assembly. The circumventing / surrounding groove on the dynamic side yields a high specific surface pressure. The radius on the inner diameter ensures a central and secure fit for the pre-stressing element. The expanded frictional area between O-ring and the profile ring also curtails relative movement with respect to each other. Depending on the section of the seal, there may be one or two grooves incorporated on the dynamic side.

The response behaviour of the pre-stressing element is improved by providing for grooves on the lateral plane faces as a standard feature.

O-ring (Part B)

O-rings are standard sealing elements with circular cross section. Those used in the present application conform to the series of dimensions as per AS 568 A (American norms). Standard MOC for hydraulics applications is NBR, which guarantees particularly good restistance to hydraulic fluids. For use with profile gaskets

O-rings with hardness of 70 Shore A are preferred.

Material overview: Swivel seal

AF-4115: PTFE with Glass fibre/lubricant - high abrasion resistance and inherent stability, good chemical resistance, used in various areas of industry and intermediatestress hydraulic applications.
AF-2426: PTFE with Carbon: good abrasion resistance and inherent stability, good chemical resistance, used in water and water-oil emulsions with intermediate stress. Also designed for dry runs.
AF-2413: PTFE with Carbon Fibre: very good abrasion resistance and inherent , stability. Used in hydraulics, also intended for dry runs.
AF-1111: PTFE with Econol - very high abrasion resistance and inherent stability, used in hydraulics and abrasive pressure fluid applications.
AF-7710: PEHD 1000 - very high abrasion resistance and inherent stability, has a strong lip, with very good scraper effect. Has a limit in temperature maximum 80°C

Material overview: O-Rings

N: Acrylnitrile-Butadiene-Rubber - Used in general machine constructions, hydraulics, pneumatics. Resistant to mineral oil based pressure fluids, HFA, HFB and HFC fluids and water.

F: Fluorine-containing Rubbers - Used at high temperatures and aggressive surrounding media, resistant to mineral based and synthetic pressure fluids, aliphatic, aromatic and chlorated hydrocarbons, phosphate-ester based poorly inflammable fluids.

E: Ethylene-Propylene-Diene Rubbers - Used in valve and pump industry. Resistant to hot water, steam, phosphate-ester based poorly inflammable fluids , but is not resistant to mineral oils.

S: Silicone-Rubbers

C: Chloroprene-Rubbers

AF-423 can be assembled in divided and undivided grooves: divided < 20 mm, closed > 20 mm.

Swivel seal rod
AF-423

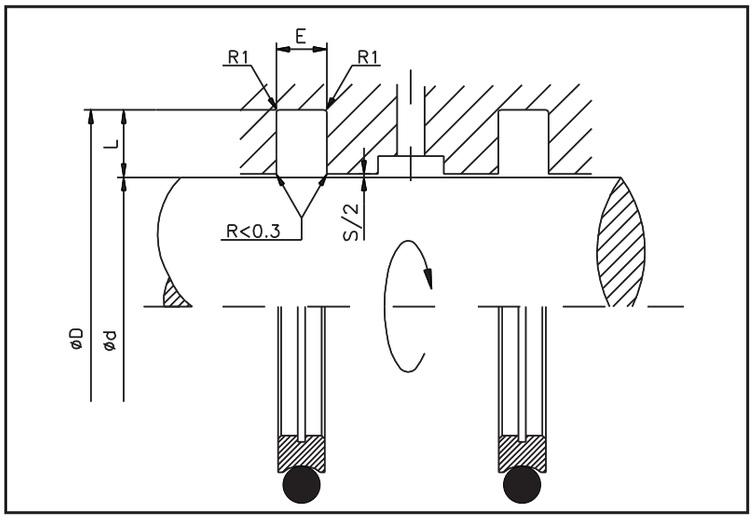

Limitations of Use

Operational pressure : bis 40 MPa (400 bar)
Velocity : rotary to 2 m/s
Temperature : -40 up to +200 °C
(depending on O-ring material)

Media for Use

Mineral oil based pressure fluids, flame resistant fluids, (HFA, HFB, HFC,) bio oils, water, air and other media depending on O-ring material

Surface Finish

Surface	Rmax	Rz	Ra
Rod diameter d	2,5 µm	1,6 µm	0,4 µm
Groove diameter D	10,0 µm	6,3 µm	1,6 µm
Groove flanks	16,0 µm	10,0 µm	3,2 µm

Surface hardness ≥ 55 HRC; Depth of hardness ≥ 0,3 mm

Preferred assembly dimensions

Section	O-Ring Cord-ø mm	Recommend Diameter Standard d mm	Groove Width E mm	Groove Depth L mm	Max. Diameter Clearance S 0 - 150 bar mm	Max. Diameter Clearance S 150 - 300 bar mm	Radius R1 max. mm
A	1,78	4,0 - 7,9	2,2	2,45	0,4 - 0,2	0,2 - 0,1	0,5
B	2,62	8,0 - 18,9	3,2	3,75	0,4 - 0,2	0,2 - 0,1	0,5
C	3,53	19,0 - 37,9	4,2	5,50	0,6 - 0,3	0,3 - 0,2	0,5
D	5,33	38,0 - 199,9	6,3	7,75	0,8 - 0,4	0,4 - 0,2	0,9
E	7,00	200,0 - 255,9	8,1	10,50	1,0 - 0,5	0,5 - 0,3	0,9
F	7,00	256,0 - 649,9	8,1	12,25	1,0 - 0,5	0,5 - 0,3	0,9
G	8,40	650,0 - 999,9	9,5	14,00	1,0 - 0,5	0,5 - 0,3	0,9

d f8/h9	D H10	E +0,2	O-Ring	Part N°.
3,00	7,90	2,20	008	AF-423--0030-A-xxxxN
4,00	8,90	2,20	010	AF-423- 0040-A-xxxxN
5,00	9,90	2,20	011	AF-423- 0050-A-xxxxN
6,00	10,90	2,20	011	AF-423- 0060-A-xxxxN
7,00	11,90	2,20	012	AF-423- 0070-A-xxxxN
8,00	12,90	2,20	012	AF-423- 0080-A-xxxxN
8,00	15,50	3,20	111	AF-423- 0080-B-xxxxN
10,00	14,90	2,20	013	AF-423- 0100-A-xxxxN
10,00	17,50	3,20	112	AF-423- 0100-B-xxxxN
12,00	16,90	2,20	015	AF-423- 0120-A-xxxxN
12,00	19,50	3,20	114	AF-423- 0120-B-xxxxN
14,00	18,90	2,20	016	AF-423- 0140-A-xxxxN
14,00	21,50	3,20	115	AF-423- 0140-B-xxxxN
15,00	19,90	2,20	016	AF-423- 0150-A-xxxxN
15,00	22,50	3,20	116	AF-423- 0150-B-xxxxN
16,00	20,90	2,20	017	AF-423- 0160-A-xxxxN
16,00	23,50	3,20	116	AF-423- 0160-B-xxxxN
18,00	22,90	2,20	018	AF-423- 0180-A-xxxxN
18,00	25,50	3,20	117	AF-423- 0180-B-xxxxN
20,00	27,50	3,20	118	AF-423- 0200-B-xxxxN
20,00	31,00	4,20	214	AF-423- 0200-C-xxxxN
22,00	29,50	3,20	120	AF-423- 0220-B-xxxxN
22,00	33,00	4,20	215	AF-423- 0220-C-xxxxN
25,00	32,50	3,20	122	AF-423- 0250-B-xxxxN
25,00	36,00	4,20	217	AF-423- 0250-C-xxxxN

d f8/h9	D H10	E +0,2	O-Ring	Part N°.
28,00	35,50	3,20	124	AF-485 B80-B-74N
28,00	39,00	4,20	219	AF-485 B80-C-74N
30,00	37,50	3,20	125	AF-485 C00-B-74N
30,00	41,00	4,20	220	AF-485 C00-C-74N
32,00	39,50	3,20	126	AF-485 C20-B-74N
32,00	43,00	4,20	221	AF-485 C20-C-74N
35,00	42,50	3,20	128	AF-485 C50-B-74N
35,00	46,00	4,20	222	AF-485 C50-C-74N
36,00	43,50	3,20	129	AF-485 C60-B-74N
36,00	47,00	4,20	223	AF-485 C60-C-74N
38,00	49,00	4,20	224	AF-485 C80-C-74N
38,00	53,50	6,30	327	AF-485 C80-D-74N
40,00	51,00	4,20	224	AF-485 D00-C-74N
40,00	55,50	6,30	328	AF-485 D00-D-74N
42,00	53,00	4,20	224	AF-485 D20-C-74N
42,00	57,50	6,30	328	AF-485 D20-D-74N
45,00	56,00	4,20	226	AF-485 D50-C-74N
45,00	60,50	6,30	329	AF-485 D50-D-74N
48,00	59,00	4,20	226	AF-485 D80-C-74N
48,00	63,50	6,30	330	AF-485 D80-D-74N
50,00	61,00	4,20	227	AF-485 0500-C-74N
50,00	65,50	6,30	331	AF-485 0500-D-74N
52,00	63,00	4,20	228	AF-485 0520-C-74N
52,00	67,50	6,30	331	AF-485 0520-D-74N
55,00	66,00	4,20	229	AF-485 0550-C-74N

Swivel seal rod
AF-423

d f8/h9	D H10	E +0,2	O-Ring	Part N°.
55,00	70,50	6,30	332	AF-423-0550-D-xxxxN
56,00	67,00	4,20	229	AF-423-0560-C-xxxxN
56,00	71,50	6,30	333	AF-423-0560-D-xxxxN
60,00	71,00	4,20	230	AF-423-0600-C-xxxxN
60,00	75,50	6,30	334	AF-423-0600-D-xxxxN
63,00	74,00	4,20	231	AF-423-0630-C-xxxxN
63,00	78,50	6,30	335	AF-423-0630-D-xxxxN
65,00	80,50	6,30	335	AF-423-0650-D-xxxxN
70,00	85,50	6,30	337	AF-423-0700-D-xxxxN
75,00	90,50	6,30	339	AF-423-0750-D-xxxxN
80,00	95,50	6,30	340	AF-423-0800-D-xxxxN
85,00	100,50	6,30	342	AF-423-0850-D-xxxxN
90,00	105,50	6,30	343	AF-423-0900-D-xxxxN
95,00	110,50	6,30	345	AF-423-0950-D-xxxxN
100,00	115,50	6,30	346	AF-423-1000-D-xxxxN
105,00	120,50	6,30	348	AF-423-1050-D-xxxxN
110,00	125,50	6,30	350	AF-423-1100-D-xxxxN
115,00	130,50	6,30	351	AF-423-1150-D-xxxxN
120,00	135,50	6,30	353	AF-423-1200-D-xxxxN
125,00	140,50	6,30	354	AF-423-1250-D-xxxxN
130,00	145,50	6,30	356	AF-423-1300-D-xxxxN
135,00	150,50	6,30	358	AF-423-1350-D-xxxxN
140,00	155,50	6,30	359	AF-423-1400-D-xxxxN
150,00	165,50	6,30	361	AF-423-1500-D-xxxxN
160,00	175,50	6,30	363	AF-423-1600-D-xxxxN
160,00	181,00	8,10	439	AF-423-1600-E-xxxxN
170,00	185,50	6,30	365	AF-423-1700-D-xxxxN
180,00	195,50	6,30	366	AF-423-1800-D-xxxxN
180,00	201,00	8,10	442	AF-423-1800-E-xxxxN
190,00	205,50	6,30	368	AF-423-1900-D-xxxxN

d f8/h9	D H10	E +0,2	O-Ring	Part N°.
200,00	221,00	8,10	445	AF-423-2000-E-xxxxN
210,00	231,00	8,10	446	AF-423-2100-E-xxxxN
220,00	241,00	8,10	447	AF-423-2200-E-xxxxN
230,00	251,00	8,10	448	AF-423-2300-E-xxxxN
240,00	261,00	8,10	448	AF-423-2400-E-xxxxN
250,00	271,00	8,10	449	AF-423-2500-E-xxxxN
260,00	284,50	8,10	450	AF-423-2600-F-xxxxN
270,00	294,50	8,10	451	AF-423-2700-F-xxxxN
280,00	304,50	8,10	452	AF-423-2800-F-xxxxN
290,00	314,50	8,10	453	AF-423-2900-F-xxxxN
300,00	324,50	8,10	453	AF-423-3000-F-xxxxN
310,00	334,50	8,10	454	AF-423-3100-F-xxxxN
320,00	344,50	8,10	455	AF-423-3200-F-xxxxN
330,00	354,50	8,10	456	AF-423-3300-F-xxxxN
340,00	364,50	8,10	457	AF-423-3400-F-xxxxN
350,00	374,50	8,10	457	AF-423-3500-F-xxxxN
360,00	384,50	8,10	458	AF-423-3600-F-xxxxN
370,00	394,50	8,10	459	AF-423-3700-F-xxxxN
380,00	404,50	8,10	460	AF-423-3800-F-xxxxN
390,00	414,50	8,10	461	AF-423-3900-F-xxxxN
400,00	424,50	8,10	461	AF-423-4000-F-xxxxN
410,00	434,50	8,10	462	AF-423-4100-F-xxxxN
420,00	444,50	8,10	463	AF-423-4200-F-xxxxN
430,00	454,50	8,10	464	AF-423-4300-F-xxxxN
440,00	464,50	8,10	464	AF-423-4400-F-xxxxN
450,00	474,50	8,10	465	AF-423-4500-F-xxxxN
460,00	484,50	8,10	466	AF-423-4600-F-xxxxN
470,00	494,50	8,10	467	HR185 4700-F-xxxxN
480,00	504,50	8,10	468	AF-423-4800-F-xxxxN
490,00	514,50	8,10	469	AF-423-4900-F-xxxxN
500,00	524,50	8,10	469	AF-423-5000-F-xxxxN

Further and intermediate sizes up to Ø 2500 mm available on request.

Example for ordering:

AF-423 - 0360 - C - 2413N

- Type
- Nominal diameter x 10
- Cross-section
- Standard material swivel seal
- Standard material O-Ring

Material Key:

Swivel seal
- AF-2426 - PTFE with carbon
- AF-2413 - PFTE with carbon fiber
- AF-4115 - PTFE with glassfiber
- AF-1111 - PTFE with Econol

O -Rings material
- N - NBR
- F - FPM
- E - EPDM
- S - Silicone
- C - Chloroprene

WARNING: Limits of application stated herein are standard values. They could be individually transgressed with due consideration to respective service conditions. In the event of a large duty cycle, pulsating operation and other complex operational conditions, simultaneous transgression of these values is not recommended. Due to a large variety of service conditions that may arise in course of actual use, the company does not take responsibility of or guarantee the functional accuracy of the individual components. Rights for changes are reserved.

Spring-activated rod seal for rotation

ASL-seals

This is meant for applications where conventional elastomer seals cannot be used due to their limited thermal and chemical resistance. Here the AF 610R type offers an optimal solution to the sealing problem.

AF-610R is a single acting rotary seal with spring prestressing and collar for resistance to torsion. Different materials for profile gasket and spring make the range of applications as wide as chemicals, pharmaceuticals, foodstuffs and equipment construction.

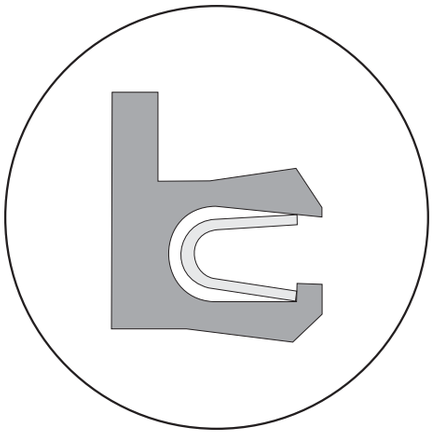

Special Features:

- High chemical resistance, and resistance to most fluid gases and other chemicals
- Very good shear characteristics, no stick slip effect
- Low frictional values and good resistance to galling.
- Very wide temperature range of application
- Available for all shaft diameters up to 2500 mm

Material	:	PTFE-Compound
Operational pressure		up to 10 MPa (100 bar)
Velocity	:	rotary to bis 4 m/s
Temperature	:	-150 up to +225 °C

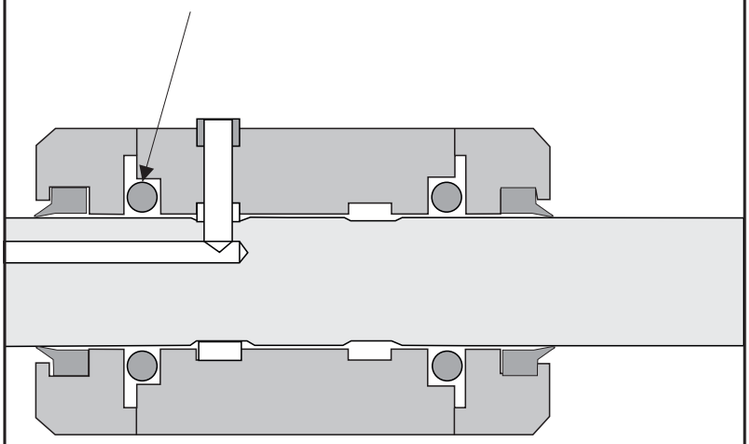

Spring-activated rod seal for rotation
ASL-Seals

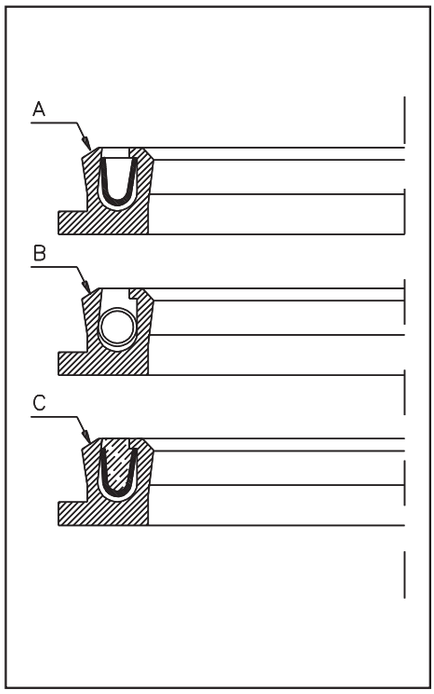

ASL-Seal is spring-activated:

The seal consists of a U-shaped profile gasket in which a metallic ring is incorporated as a prestressing element. To enhance sealing characteristics and service life, the (internal) dynamic sealing lip is designed as somewhat more robust than the (external) static lip. The presence of a collar on the outer edge prevents the seal from rotating along with the shaft A.

All profile gaskets are made form modified PTFE materials. The standard material for all general purpose applications is Compound 3 in combination with a prestressing spring from stainless steel. 1

Materials Overview: ALS-Seal body :

AF-1022: Very good chemical resistance, outstanding shear characteristics, special purpose and intermediate stress applications.
AF-2426: PTFE with Carbon: good abrasion resistance and inherent stability, good chemical resistance, used in water and water-oil emulsions with intermediate stress. Also designed for dry runs.
AF-1111: PTFE with Econol - very high abrasion resistance and inherent stability, used in hydraulics and abrasive pressure fluid applications.

Spring constructions:

0: Stainless Steel for general applications (A).

1: Stainless Steel for aggressive media (B).

2: Stainless Steel for general applications, but cast in silicon (C).

3: Stainless Steel for aggressive media, but cast in silicone.

In types 2 and 3, the space around the spring (spring groove or slot) is filled with silicone Since the seals can be sterilsed, they are preferentially used in the foodstuffs industry .

Spring-activated rod seal for rotation
ASL-Seals

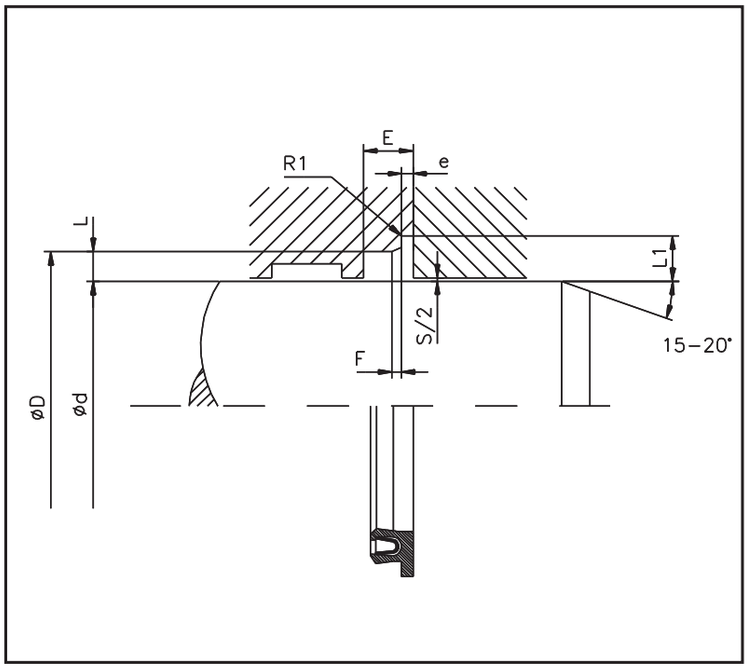

Limitations of Use

Operational pressure	: up to 10 MPa (100 bar)
Velocity	: rotary to 4 m/s
Temperature	: -150 up to +255 °C

Media for Use

Mineral based and synthetic pressure fluids, water, air, steam,acids and various chemicals depending on sealing and O-ring material.

Surface Finish

Surface	Rmax	Rz	Ra
Rod diameter d	1,5 µm	0,8 µm	0,2 µm
Groove diameter D	5,0 µm	3,2 µm	0,8 µm
Groove flanks	16,0 µm	10,0 µm	3,2 µm

Tolerances

Nominal diameter	d f8/h9
Groove diameter	D H11
Groove width	E $^{+0,2}_{-0}$

Standard dimensions

Section	O-Ring equivalent mm	Recommend Diameter Standard D mm	Groove Width E mm	Groove Depth L mm	Flange Width e mm	Flange Depth L1 mm	Width F mm	Max. Diameter Clearance S mm	Radius R1 max. mm
B	2,62	8 - 19,9	3,60	2,50 + 0,05	0,85 - 0,10	4,50 + 0,08	0,80	0,13	0,3
C	3,53	20 - 39,9	4,80	3,50 + 0,08	1,35 - 0,15	6,25 + 0,10	1,10	0,15	0,4
D	5,33	40 - 399,9	7,10	5,25 + 0,10	1,80 - 0,20	8,75 + 0,15	1,40	0,17	0,5
E	6,99	400 - 699,9	9,50	7,00 + 0,10	2,80 - 0,20	11,00 + 0,15	1,60	0,25	0,5

Futher and intermediate sizes up to Ø 2500 mm available on request.

Example for ordering:

AF-610R - 0360- C - 1022 VS

- Type
- Nominal diameter x 10
- Cross-section
- ASL-Seal body
- ASL-Seal body
- Spring design (Standard)

Material Key:

ASL-Seal body
AF-2426 - PTFE with carbon
AF-2413 - PFTE with carbon fiber
AF-1111 - PTFE with Econol
AF-1022 - PTFE with additive
AF-7710 - PEHD 1000 (uhmwpe)

Spring construction:
S - Standard
H - for aggressive media
Q - Standard silicone cast
E - for aggressive media

For silicone filled seals please add Q after VS.

WARNING: Limits of application stated herein are standard values. They could be individually transgressed with due consideration to respective service conditions. In the event of a large duty cycle, pulsating operation and other complex operational conditions, simultaneous transgression of these values is not recommended. Due to a large variety of service conditions that may arise in course of actual use, the company does not take responsibility of or guarantee the functional accuracy of the individual components. Rights for changes are reserved.

Radial lip seal
AF-910

Metal cased Radial Lip seals type AF-910

Radial lip seals with one or more sealing lip(s) of PTFE are designed to withstand e.g. aggressive environments, high temperatures, high pressures and non-lubricated services that traditional radial seals do not withstand.

Radial seals of PTFE can be assembled in existing housings where traditional radial seals are used, provided that they are produced in accordance with DIN 3760.

Series AF-91X can be delivered with a metal case of steel, aluminium and the following stainless steel SS 304, SS 316 and SS 316 . The PTFE material is to be chosen among several FDA approved materials in order to adjust to each application's specific demands.

AF-910 is designed with a PTFE lip fastened in a metal case.
Housing dimensions according to DIN 3760 or special designs.

Advantages – metal case:

- High chemical resistance
- Withstands speeds up to 30 m/s
- Wide temperature range –20°C – +250°C
- Withstands pressures up to 3,5 MPa
- Withstands non-lubricated service
- FDA quality

SEAL SERIES/TYPE

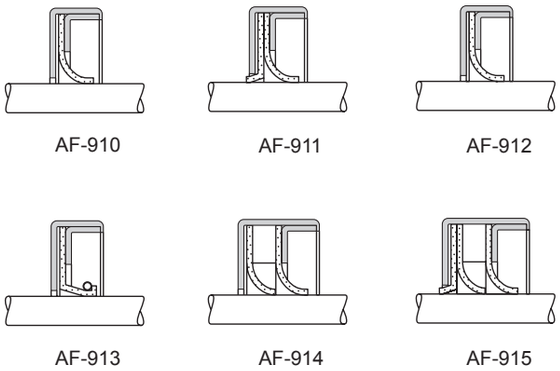

Radial lip seal
AF-910

Designations

Accofluor's radial lip seals are designated according to a system which clearly states the seal series, type, dynamic sealing diameter (shaft), nominal housing groove diameter, housing groove width and material.

AF-910-130 / 160 x 12-1111S

Type
Shaft diameter
Housing groove diameter
Housing groove width
Material code (lip) code (case)

Seal Materials

The choice of seal materials always includes a compromise between advantages and disadvantages. Slide ring seals can be delivered with slide rings of several different PTFE materials. The materials which we most often suggest are stated below.

There are many hundreds of different PTFE materials with variants of fillers, e.g. glass fibre, carbon, graphite, molybdenum disulphide, metal oxides, polymeric fillers and combinations of different fillers. Each possesses different properties appropriate for different applications and working conditions.

Unfilled PTFE provides most often a lower friction than a filled PTFE material and the lowest degree of wear of the cylinder tube surface. However, its own resistance to wear and deformation under load is limited.

Common for all filled PTFE materials is their different degree of better resistance to wear and deformation.

Radial lip seal
AF-910

Seal lip, material codes
Code MS Material type

AF-1111 PTFE+Ekonol
AF-2417 PTFE + Carbon + Graphite
AF-2413 PTFE + Carbon fibre

Metal case, material codes

Code	Material type
C	carbon steel
S	AISI 304s tandard material
SS	AISI 316 Acidproof steel
AL	Aluminium

All series can be delivered with a special design regarding groove dimensions and material properties in order to obtain an optima solution.

Radial lip seal
AF-910

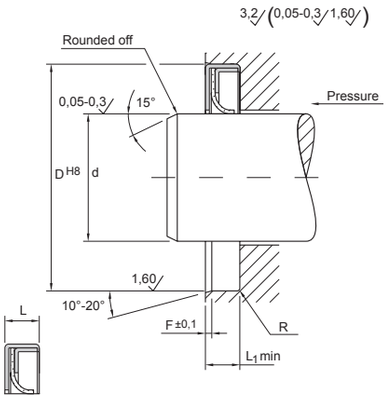

Type AF-910
Radial lip seals type AF-910 are adjusted to grooves according to DIN 3760.

The housing bore shall have a diameter tolerance not greater than H8 in accordance with ISO.

The surface roughness of the housing bore shall not exceed either 1,6 µm Ra or 6,3 µm Rz in accordance with ISO.

Housing Bore Dimensions	Dimension in mm
Nominal width L	Maximum housing corner radius
< 10	0,5
10	0,7

d	D	L	L_1	F	Part number
6	16	7	7,3	1,3	AF-910 61607
6	22	7	7,3	1,3	AF-910 62207
7	22	7	7,3	1,3	AF-910 72207
8	22	7	7,3	1,3	AF-910 82207
8	24	7	7,3	1,3	AF-910 82407
9	22	7	7,3	1,3	AF-910 92207
10	22	7	7,3	1,3	AF-910 102207
10	25	7	7,3	1,3	AF-910 102507
12	24	7	7,3	1,3	AF-910 122407
12	25	7	7,3	1,3	AF-910 122507
12	30	7	7,3	1,3	AF-910 123007
15	26	7	7,3	1,3	AF-910 152607
15	30	7	7,3	1,3	AF-910 153007
15	35	7	7,3	1,3	AF-910 153507
16	30	7	7,3	1,3	AF-910 163007
18	30	7	7,3	1,3	AF-910 183007
18	35	7	7,3	1,3	AF-910 183507
20	35	7	7,3	1,3	AF-910 203507
20	40	7	7,3	1,3	AF-910 204007
22	35	7	7,3	1,3	AF-910 223507
22	40	7	7,3	1,3	AF-910 224007
22	47	7	7,3	1,3	AF-910 224707
25	40	7	7,3	1,3	AF-910 254007
25	47	7	7,3	1,3	AF-910 254707
25	52	7	7,3	1,3	AF-910 255207
28	40	7	7,3	1,3	AF-910 284007
28	47	7	7,3	1,3	AF-910 284707
28	52	7	7,3	1,3	AF-910 285207
30	42	7	7,3	1,3	AF-910 304207
30	47	7	7,3	1,3	AF-910 304707
30	52	7	7,3	1,3	AF-910 305207
32	45	8	8,3	1,5	AF-910 324508
32	47	8	8,3	1,5	AF-910 324708
32	52	8	8,3	1,5	AF-910 325208
35	50	8	8,3	1,5	AF-910 355008
35	52	8	8,3	1,5	AF-910 355208

d	D	L	L_1	F	Part number
35	55	8	8,3	1,5	AF-910 355508
38	55	8	8,3	1,5	AF-910 385508
38	58	8	8,3	1,5	AF-910 385808
38	62	8	8,3	1,5	AF-910 386208
40	55	8	8,3	1,5	AF-910 405508
40	62	8	8,3	1,5	AF-910 406208
42	55	8	8,3	1,5	AF-910 425508
42	62	8	8,3	1,5	AF-910 426208
45	62	8	8,3	1,5	AF-910 456208
45	65	8	8,3	1,5	AF-910 456508
50	68	8	8,3	1,5	AF-910 506808
50	72	8	8,3	1,5	AF-910 507208
55	72	8	8,3	1,5	AF-910 557208
55	80	8	8,3	1,5	AF-910 558008
60	80	8	8,3	1,5	AF-910 506008
60	85	8	8,3	1,5	AF-910 608508
65	85	10	10,3	1,8	AF-910 658510
65	90	10	10,3	1,8	AF-910 659010
70	90	10	10,3	1,8	AF-910 709010
70	95	10	10,3	1,8	AF-910 709510
75	95	10	10,3	1,8	AF-910 759510
75	100	10	10,3	1,8	AF-910 7510010
80	100	10	10,3	1,8	AF-910 8010010
80	110	10	10,3	1,8	AF-910 8011010
85	110	12	12,3	2	AF-910 8511012
85	120	12	12,3	2	AF-910 8512012
90	120	12	12,3	2	AF-910 9012012
95	120	12	12,3	2	AF-910 9512012
100	125	12	12,3	2	AF-910 10012512
110	140	12	12,3	2	AF-910 11014012
120	150	12	12,3	2	AF-910 12015012
130	160	12	12,3	2	AF-910 13016012
140	170	15	15,3	2,5	AF-910 14017015
150	180	15	15,3	2,5	AF-910 15018015
160	190	15	15,3	2,5	AF-910 16019015
170	200	15	15,3	2,5	AF-910 17020015

Please state type, e.g. AF-910 61607, when ordering also choose the correct series.

Radial lip seal
AF-910

d	D	L	L_1	F	Part number
180	210	15	15,3	2,5	AF-910 18021015
190	220	15	15,3	2,5	AF-910 19022015
200	230	15	15,3	2,5	AF-910 20023015
220	250	15	15,3	2,5	AF-910 22025015
240	270	15	15,3	2,5	AF-910 24027015
260	300	15	15,3	2,5	AF-910 26030020
280	320	20	20,3	3,3	AF-910 28032020
300	340	20	20,3	3,3	AF-910 30034020
320	360	20	20,3	3,3	AF-910 32036020
340	380	20	20,3	3,3	AF-910 34038020
360	400	20	20,3	3,3	AF-910 36040020
380	420	20	20,3	3,3	AF-910 38042020
400	440	20	20,3	3,3	AF-910 40044020

V-ring
VA, VS, VL and VE

Rotation seals of the HV 280 series have been in use for years in machine construction as elastomeric seals for shafts and bearings. They effectively and reliably provide sealing against attack by dust, dirt, oil and water splashes etc for axial sealing areas.

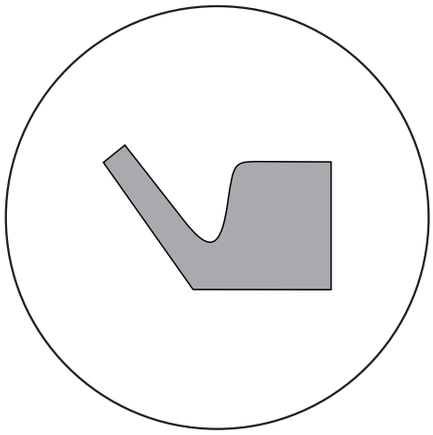

Special Features:

- Reliable and convenient axial sealing
- No wear (erosion) of shaft
- Safe function even for slightly tilled opposite (running) face or low shaft eccentricity
- Simple slide assembly in small mounting space
- Lower storage costs because of suitability to various shaft diameters
- Increases life of machine components due to protection of bearings
- Lower starting torque and friction in operation
- No sticking at the sealing lip even after long periods of stand stills.
- Highly wear resistant of elastomer material
- Also available in FPM

Material	:	Rubber elastomer
Velocity	:	peripheral velocity (rotary) to 8 m/s
Temperature	:	-60 up to +220 °C (depending on the material)

Design Variations:

V-rings are available in four design variations:

VA: Standard profile with vertical backside. Large range of sizes (3 mm up to 2020 mm) shaft diameter.

VS : Wider body, designed to take higher radial force than the design VA. Available for shaft diameters from 5 mm up to 310 mm.

VL : Special profile for small mounting spaces. Available for 135 mm up to 165 mm shaft diameters.

VE : For heavy duty application and large diameter. Normal commercial tightening strap can be used to improve axial fit.

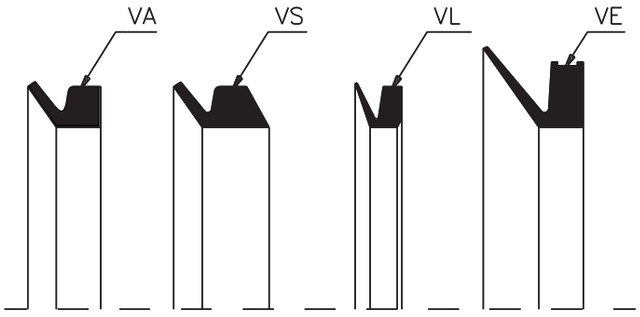

V-ring
VA, VS, VL and VE

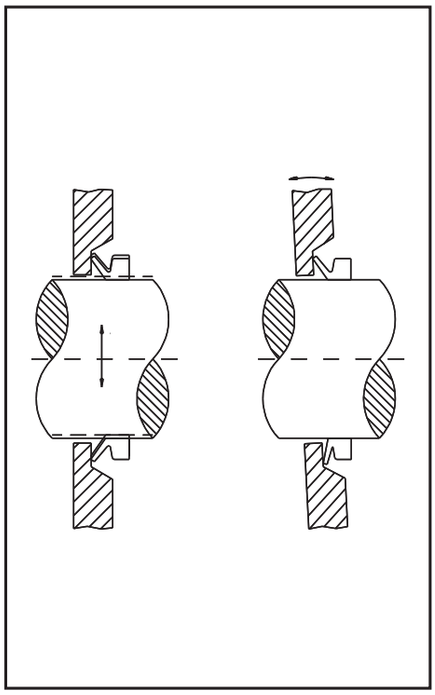

Use in shaft eccentricity or misalignment cases:

The V-shape profile ensures an effective and reliable sealing function even with an oval cross section or eccentric shafts. The tilted seal lip gives a very good sealing effect against sealing surface area. The purpose is to not get to large a surface contact.

Surface:

The characteristics of the seal counter surface determines the service life of the sealing lip to a larage extent. Surface roughness should be designed to Ra < 0,4 and should be free of sharp edges and scratches that could wear out the sealing lip in a short time.

Choice of material

NBR - Standard for most applications from -40°C up to +120°C (+90°C in water) - good resistance to mineral oils, water, lubricants and radiator fluids, - high tensile strength. Not resistant to glycol based truck brake fluids. Low resistance to aromatic solvents and carbon tetrachloride, trichloroethylene (chlorine containing hydrocarbons)

FP - Recommended for high temperature applications (- 30 up to +200 °C) , good chemical resistance, outstanding resistance to mineral oils, acids. Good resistance to aromatic and chlorine containing hydrocarbons, ageing, weathering influences, ozone. Low temperature flexibility restriction, Low resistance to polar fluids like kentone, ether, ester.

SIL -Recommended for fluctuating service temperatures (- 60 up to +220 °C) at low rotational velocities. Resists continuous heating even at higher temperatures without hardening. Remains flexible even at very low temperatures. Resistant to mineral oils, lubricants and alkaloids. Outstanding resistance to ageing, weathering influences and ozone. Not recommended for use with hydrocarbons, fuels and paraffins or light mineral oils. Not resistant to hot water, oils and non mineral based brake fluids for trucks.

CR - Application range (- 40 up to +80 °C) High tensile strength up to 15 MPa, outstanding resistance to ageing, weathering and ozone. Limited resistance to mineral oils and lubricants. Not resistant to non mineral based brake fluids for trucks.

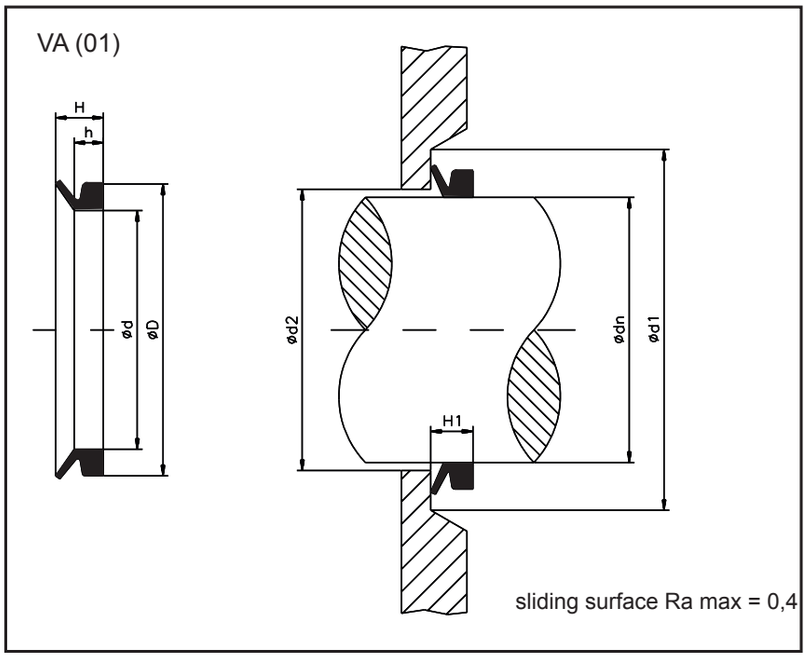

Type VA

dn	d	D	h	H	d2 max	d1 min	H1	Part N°.
2,7 - 3,5	2,50	5,50	2,10	3,00	dn + 1	dn + 4	2,5 + 0,3	VA 3 V-ring NBR
3,5 - 4,5	3,20	7,20	2,40	3,70	dn + 1	dn + 6	3,0 + 0,4	VA 4 V-ring NBR
4,5 - 5,5	4,00	8,00	2,40	3,70	dn + 1	dn + 6	3,0 + 0,4	VA 5 V-ring NBR
5,5 - 6,5	5,00	9,00	2,40	3,70	dn + 1	dn + 6	3,0 + 0,4	VA 6 V-ring NBR
6,5 - 8,0	6,00	10,00	2,40	3,70	dn + 1	dn + 6	3,0 + 0,4	VA 7 V-ring NBR
8,0 - 9,5	7,00	11,00	2,40	3,70	dn + 1	dn + 6	3,0 + 0,4	VA 8 V-ring NBR
9,5 -11,5	9,00	15,00	3,40	5,50	dn + 2	dn + 9	4,5 + 0,6	VA 10 V-ring NBR
11,5 -13,5	10,50	16,50	3,40	5,50	dn + 2	dn + 9	4,5 + 0,6	VA 12 V-ring NBR
13,5 -15,5	12,50	18,50	3,40	5,50	dn + 2	dn + 9	4,5 + 0,6	VA 14 V-ring NBR
15,5 -17,5	14,00	20,00	3,40	5,50	dn + 2	dn + 9	4,5 + 0,6	VA 16 V-ring NBR
17,5 -19,0	16,00	22,00	3,40	5,50	dn + 2	dn + 9	4,5 + 0,6	VA 18 V-ring NBR
19,0 -21,0	18,00	26,00	4,70	7,50	dn + 2	dn + 12	6,0 + 0,8	VA 20 V-ring NBR
21,0 -24,0	20,00	28,00	4,70	7,50	dn + 2	dn + 12	6,0 + 0,8	VA 22 V-ring NBR
24,0 -27,0	22,00	30,00	4,70	7,50	dn + 2	dn + 12	6,0 + 0,8	VA 25 V-ring NBR
27,0 -29,0	25,00	33,00	4,70	7,50	dn + 3	dn + 12	6,0 + 0,8	VA 28 V-ring NBR
29,0 -31,0	27,00	35,00	4,70	7,50	dn + 3	dn + 12	6,0 + 0,8	VA 30 V-ring NBR
31,0 -33,0	29,00	37,00	4,70	7,50	dn + 3	dn + 12	6,0 + 0,8	VA 32 V-ring NBR
33,0 -36,0	31,00	39,00	4,70	7,50	dn + 3	dn + 12	6,0 + 0,8	VA 35 V-ring NBR
36,0 -38,0	34,00	42,00	4,70	7,50	dn + 3	dn + 12	6,0 + 0,8	VA 38 V-ring NBR
38,0 -43,0	36,00	46,00	5,50	9,00	dn + 3	dn + 15	7,0 + 1,0	VA 40 V-ring NBR
43,0 -48,0	40,00	50,00	5,50	9,00	dn + 3	dn + 15	7,0 + 1,0	VA 45 V-ring NBR
48,0 -53,0	45,00	55,00	5,50	9,00	dn + 3	dn + 15	7,0 + 1,0	VA 50 V-ring NBR
53,0 -58,0	49,00	59,00	5,50	9,00	dn + 3	dn + 15	7,0 + 1,0	VA 55 V-ring NBR
58,0 -63,0	54,00	64,00	5,50	9,00	dn + 3	dn + 15	7,0 + 1,0	VA 60 V-ring NBR
63,0 -68,0	58,00	68,00	5,50	9,00	dn + 3	dn + 15	7,0 + 1,0	VA 65 V-ring NBR
68,0 -73,0	63,00	75,00	6,80	11,00	dn + 4	dn + 18	9,0 + 1,2	VA 70 V-ring NBR
73,0 -78,0	67,00	79,00	6,80	11,00	dn + 4	dn + 18	9,0 + 1,2	VA 75 V-ring NBR
78,0 -83,0	72,00	84,00	6,80	11,00	dn + 4	dn + 18	9,0 + 1,2	VA 80 V-ring NBR
83,0 -88,0	76,00	88,00	6,80	11,00	dn + 4	dn + 18	9,0 + 1,2	VA 85 V-ring NBR
88,0 -93,0	81,00	93,00	6,80	11,00	dn + 4	dn + 18	9,0 + 1,2	VA 90 V-ring NBR
93,0 -98,0	85,00	97,00	6,80	11,00	dn + 4	dn + 18	9,0 + 1,2	VA 95 V-ring NBR
98,0 -105,0	90,00	102,00	6,80	11,00	dn + 4	dn + 18	9,0 + 1,2	VA 100 V-ring NBR
105,0 -115,0	99,00	113,00	7,90	12,80	dn + 4	dn + 21	10,5 + 1,5	VA 110 V-ring NBR

V-ring
VA

dn	d	D	h	H	d2 max	d1 min	H1	Part N°.
115 - 125	108,00	122,00	7,90	12,80	dn + 4	dn + 21	10,5 ± 1,5	VA 120 V-ring NBR
125 - 135	117,00	131,00	7,90	12,80	dn + 4	dn + 21	10,5 ± 1,5	VA 130 V-ring NBR
135 - 145	126,00	140,00	7,90	12,80	dn + 4	dn + 21	10,5 ± 1,5	VA 140 V-ring NBR
145 - 155	135,00	149,00	7,90	12,80	dn + 4	dn + 21	10,5 ± 1,5	VA 150 V-ring NBR
155 - 165	144,00	160,00	9,00	14,50	dn + 5	dn + 24	12,0 ± 1,8	VA 160 V-ring NBR
165 - 175	153,00	169,00	9,00	14,50	dn + 5	dn + 24	12,0 ± 1,8	VA 170 V-ring NBR
175 - 185	162,00	178,00	9,00	14,50	dn + 5	dn + 24	12,0 ± 1,8	VA 180 V-ring NBR
185 - 195	171,00	187,00	9,00	14,50	dn + 5	dn + 24	12,0 ± 1,8	VA 190 V-ring NBR
195 - 210	180,00	196,00	9,00	14,50	dn + 5	dn + 24	12,0 ± 1,8	VA 199 V-ring NBR
190 - 210	180,00	210,00	14,30	25,00	dn + 10	dn + 45	20,0 ± 4,0	VA 200 V-ring NBR
210 - 235	198,00	228,00	14,30	25,00	dn + 10	dn + 45	20,0 ± 4,0	VA 220 V-ring NBR
235 - 265	225,00	255,00	14,30	25,00	dn + 10	dn + 45	20,0 ± 4,0	VA 250 V-ring NBR
265 - 290	247,00	277,00	14,30	25,00	dn + 10	dn + 45	20,0 ± 4,0	VA 275 V-ring NBR
290 - 310	270,00	300,00	14,30	25,00	dn + 10	dn + 45	20,0 ± 4,0	VA 300 V-ring NBR
310 - 335	292,00	322,00	14,30	25,00	dn + 10	dn + 45	20,0 ± 4,0	VA 325 V-ring NBR
335 - 365	315,00	345,00	14,30	25,00	dn + 10	dn + 45	20,0 ± 4,0	VA 350 V-ring NBR
365 - 390	337,00	367,00	14,30	25,00	dn + 10	dn + 45	20,0 ± 4,0	VA 375 V-ring NBR
390 - 430	360,00	390,00	14,30	25,00	dn + 10	dn + 45	20,0 ± 4,0	VA 400 V-ring NBR
430 - 480	405,00	435,00	14,30	25,00	dn + 10	dn + 45	20,0 ± 4,0	VA 450 V-ring NBR
480 - 530	450,00	480,00	14,30	25,00	dn + 10	dn + 45	20,0 ± 4,0	VA 500 V-ring NBR
530 - 580	495,00	525,00	14,30	25,00	dn + 10	dn + 45	20,0 ± 4,0	VA 550 V-ring NBR
580 - 630	540,00	570,00	14,30	25,00	dn + 10	dn + 45	20,0 ± 4,0	VA 600 V-ring NBR
630 - 665	600,00	630,00	14,30	25,00	dn + 10	dn + 45	20,0 ± 4,0	VA 650 V-ring NBR
665 - 705	630,00	660,00	14,30	25,00	dn + 10	dn + 45	20,0 ± 4,0	VA 700 V-ring NBR
705 - 745	670,00	700,00	14,30	25,00	dn + 10	dn + 45	20,0 ± 4,0	VA 725 V-ring NBR
745 - 785	705,00	735,00	14,30	25,00	dn + 10	dn + 45	20,0 ± 4,0	VA 750 V-ring NBR
785 - 830	745,00	775,00	14,30	25,00	dn + 10	dn + 45	20,0 ± 4,0	VA 800 V-ring NBR
830 - 875	785,00	815,00	14,30	25,00	dn + 10	dn + 45	20,0 ± 4,0	VA 850 V-ring NBR
875 - 920	825,00	855,00	14,30	25,00	dn + 10	dn + 45	20,0 ± 4,0	VA 900 V-ring NBR
965 -1015	910,00	940,00	14,30	25,00	dn + 10	dn + 45	20,0 ± 4,0	VA 1000 V-ring NBR
1015 -1065	955,00	985,00	14,30	25,00	dn + 10	dn + 45	20,0 ± 4,0	VA 1050 V-ring NBR
1065 -1115	1000,00	1030,00	14,30	25,00	dn + 10	dn + 45	20,0 ± 4,0	VA 1100 V-ring NBR
1115 -1165	1045,00	1075,00	14,30	25,00	dn + 10	dn + 45	20,0 ± 4,0	VA 1150 V-ring NBR
1165 -1215	1090,00	1120,00	14,30	25,00	dn + 10	dn + 45	20,0 ± 4,0	VA 1200 V-ring NBR
1215 -1270	1135,00	1165,00	14,30	25,00	dn + 10	dn + 45	20,0 ± 4,0	VA 1250 V-ring NBR
1270 -1320	1180,00	1210,00	14,30	25,00	dn + 10	dn + 45	20,0 ± 4,0	VA 1300 V-ring NBR
1320 -1370	1225,00	1255,00	14,30	25,00	dn + 10	dn + 45	20,0 ± 4,0	VA 1350 V-ring NBR
1370 -1420	1270,00	1300,00	14,30	25,00	dn + 10	dn + 45	20,0 ± 4,0	VA 1400 V-ring NBR
1420 -1470	1315,00	1345,00	14,30	25,00	dn + 10	dn + 45	20,0 ± 4,0	VA 1450 V-ring NBR
1470 -1520	1360,00	1390,00	14,30	25,00	dn + 10	dn + 45	20,0 ± 4,0	VA 1500 V-ring NBR
1520 -1570	1405,00	1435,00	14,30	25,00	dn + 10	dn + 45	20,0 ± 4,0	VA 1550 V-ring NBR
1570 -1620	1450,00	1480,00	14,30	25,00	dn + 10	dn + 45	20,0 ± 4,0	VA 1600 V-ring NBR
1620 -1670	1495,00	1525,00	14,30	25,00	dn + 10	dn + 45	20,0 ± 4,0	VA 1650 V-ring NBR
1670 -1720	1540,00	1570,00	14,30	25,00	dn + 10	dn + 45	20,0 ± 4,0	VA 1700 V-ring NBR
1720 -1770	1585,00	1615,00	14,30	25,00	dn + 10	dn + 45	20,0 ± 4,0	VA 1750 V-ring NBR
1770 -1820	1630,00	1660,00	14,30	25,00	dn + 10	dn + 45	20,0 ± 4,0	VA 1800 V-ring NBR
1820 -1870	1675,00	1705,00	14,30	25,00	dn + 10	dn + 45	20,0 ± 4,0	VA 1850 V-ring NBR
1870 -1920	1720,00	1750,00	14,30	25,00	dn + 10	dn + 45	20,0 ± 4,0	VA 1900 V-ring NBR
1920 -1970	1765,00	1795,00	14,30	25,00	dn + 10	dn + 45	20,0 ± 4,0	VA 1950 V-ring NBR
1970 -2020	1811,00	1840,00	14,30	25,00	dn + 10	dn + 45	20,0 + 4,0	VA 2000 V-ring NBR

These sizes also available in FPM, Silicone and CR.

Example for ordering:

VA 20 V-ring NBR

Type — VA
Nominal diameter — 20
Design — V-ring
Standard material — NBR

Material:

NBR
FPM
Silicone
CR

Design:

VA
VS
VL
VE

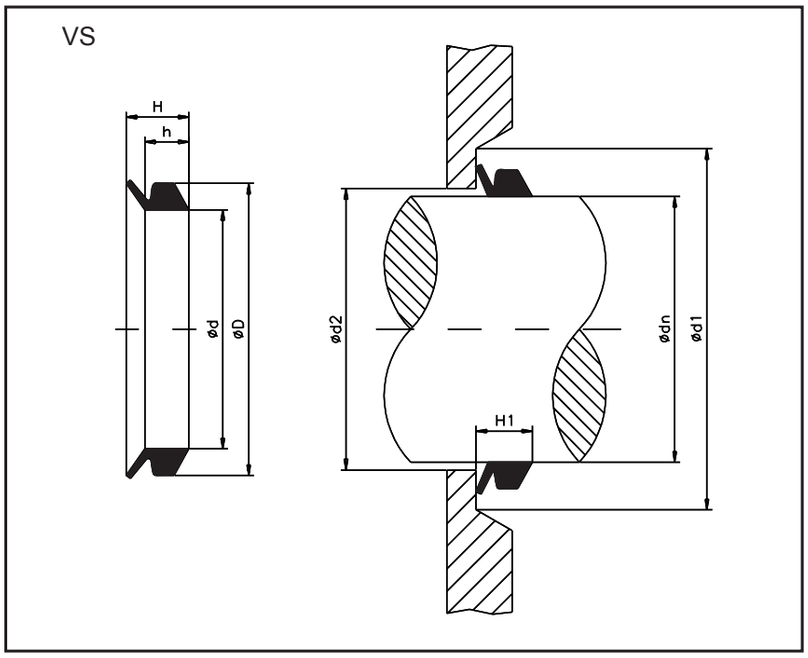

Type VS

dn	d	D	h	H	d2 max	d1 min	H1	Part N°.
4,5 - 5,5	4,00	8,00	3,90	5,20	dn + 1	dn + 6	4,5 ± 0,4	VS 5 V-ring NBR
5,5 - 6,5	5,00	9,00	3,90	5,20	dn + 1	dn + 6	4,5 ± 0,4	VS 6 V-ring NBR
6,5 - 8,0	6,00	10,00	3,90	5,20	dn + 1	dn + 6	4,5 ± 0,4	VS 7 V-ring NBR
8,0 - 9,5	7,00	11,00	3,90	5,20	dn + 1	dn + 6	4,5 ± 0,4	VS 8 V-ring NBR
9,5 - 11,5	9,00	15,00	5,60	7,70	dn + 2	dn + 9	6,7 ± 0,6	VS 10 V-ring NBR
11,5 - 13,5	10,50	16,50	5,60	7,70	dn + 2	dn + 9	6,7 ± 0,6	VS 12 V-ring NBR
13,5 - 15,5	12,50	18,50	5,60	7,70	dn + 2	dn + 9	6,7 ± 0,6	VS 14 V-ring NBR
15,5 - 17,5	14,00	20,00	5,60	7,70	dn + 2	dn + 9	6,7 ± 0,6	VS 16 V-ring NBR
17,5 - 19,0	16,00	22,00	5,60	7,70	dn + 2	dn + 9	6,7 ± 0,6	VS 18 V-ring NBR
19,0 - 21,0	18,00	26,00	7,90	10,50	dn + 2	dn + 12	9,0 ± 0,8	VS 20 V-ring NBR
21,0 - 24,0	20,00	28,00	7,90	10,50	dn + 2	dn + 12	9,0 ± 0,8	VS 22 V-ring NBR
24,0 - 27,0	22,00	30,00	7,90	10,50	dn + 2	dn + 12	9,0 ± 0,8	VS 25 V-ring NBR
27,0 - 29,0	25,00	33,00	7,90	10,50	dn + 3	dn + 12	9,0 ± 0,8	VS 28 V-ring NBR
29,0 - 31,0	27,00	35,00	7,90	10,50	dn + 3	dn + 12	9,0 ± 0,8	VS 30 V-ring NBR
31,0 - 33,0	29,00	37,00	7,90	10,50	dn + 3	dn + 12	9,0 ± 0,8	VS 32 V-ring NBR
33,0 - 36,0	31,00	39,00	7,90	10,50	dn + 3	dn + 12	9,0 ± 0,8	VS 35 V-ring NBR
36,0 - 38,0	34,00	42,00	7,90	10,50	dn + 3	dn + 12	9,0 ± 0,8	VS 38 V-ring NBR
38,0 - 43,0	36,00	46,00	9,50	13,00	dn + 3	dn + 15	11,0 ± 1,0	VS 40 V-ring NBR
43,0 - 48,0	40,00	50,00	9,50	13,00	dn + 3	dn + 15	11,0 ± 1,0	VS 45 V-ring NBR
48,0 - 53,0	45,00	55,00	9,50	13,00	dn + 3	dn + 15	11,0 ± 1,0	VS 50 V-ring NBR
53,0 - 58,0	49,00	59,00	9,50	13,00	dn + 3	dn + 15	11,0 ± 1,0	VS 55 V-ring NBR
58,0 - 63,0	54,00	64,00	9,50	13,00	dn + 3	dn + 15	11,0 ± 1,0	VS 60 V-ring NBR
63,0 - 68,0	58,00	68,00	9,50	13,00	dn + 3	dn + 15	11,0 ± 1,0	VS 65 V-ring NBR
68,0 - 73,0	63,00	75,00	11,30	15,50	dn + 4	dn + 18	13,5 ± 1,2	VS 70 V-ring NBR
73,0 - 78,0	67,00	79,00	11,30	15,50	dn + 4	dn + 18	13,5 ± 1,2	VS 75 V-ring NBR
78,0 - 83,0	72,00	84,00	11,30	15,50	dn + 4	dn + 18	13,5 ± 1,2	VS 80 V-ring NBR
83,0 - 88,0	76,00	88,00	11,30	15,50	dn + 4	dn + 18	13,5 ± 1,2	VS 85 V-ring NBR
88,0 - 93,0	81,00	93,00	11,30	15,50	dn + 4	dn + 18	13,5 ± 1,2	VS 90 V-ring NBR
93,0 - 98,0	85,00	97,00	11,30	15,50	dn + 4	dn + 18	13,5 ± 1,2	VS 95 V-ring NBR
98,0 - 105,0	90,00	102,00	11,30	15,50	dn + 4	dn + 18	13,5 ± 1,2	VS 100 V-ring NBR
105,0 - 115,0	99,00	113,00	13,10	18,00	dn + 4	dn + 21	15,5 ± 1,5	VS 110 V-ring NBR
115,0 - 125,0	108,00	122,00	13,10	18,00	dn + 4	dn + 21	15,5 ± 1,5	VS 120 V-ring NBR
125,0 - 135,0	117,00	131,00	13,10	18,00	dn + 4	dn + 21	15,5 ± 1,5	VS 130 V-ring NBR

V-ring
VS

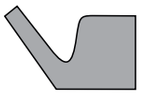

dn	d	D	h	H	d2 max	d1 min	H1	Part N°.
135 - 145	126,00	140,00	13,10	18,00	dn + 4	dn + 21	15,5 ± 1,5	VS 140 V-ring NBR
145 - 155	135,00	149,00	13,10	18,00	dn + 4	dn + 21	15,5 ± 1,5	VS 150 V-ring NBR
155 - 165	144,00	160,00	15,00	20,50	dn + 5	dn + 24	18,0 ± 1,8	VS 160 V-ring NBR
165 - 175	153,00	169,00	15,00	20,50	dn + 5	dn + 24	18,0 ± 1,8	VS 170 V-ring NBR
175 - 185	162,00	178,00	15,00	20,50	dn + 5	dn + 24	18,0 ± 1,8	VS 180 V-ring NBR
185 - 195	171,00	187,00	15,00	20,50	dn + 5	dn + 24	18,0 ± 1,8	VS 190 V-ring NBR
195 - 210	180,00	196,00	15,00	20,50	dn + 5	dn + 24	18,0 ± 1,8	VS 199 V-ring NBR

These sizes also available in FPM, Silcone und CR.

Example for ordering :

VS 190 V-ring NBR

Type
Nominal diameter
Design
Standard material

Material:

NBR
FPM
Silicone
CR

Design:

VA
VS
VL
VE

WARNING: Limits of application stated herein are standard values. They could be individually transgressed with due consideration to respective service conditions. In the event of a large duty cycle, pulsating operation and other complex operational conditions, simultaneous transgression of these values is not recommended. Due to a large variety of service conditions that may arise in course of actual use, the company does not take responsibility of or guarantee the functional accuracy of the individual components. Rights for changes are reserved.

V-ring
VL

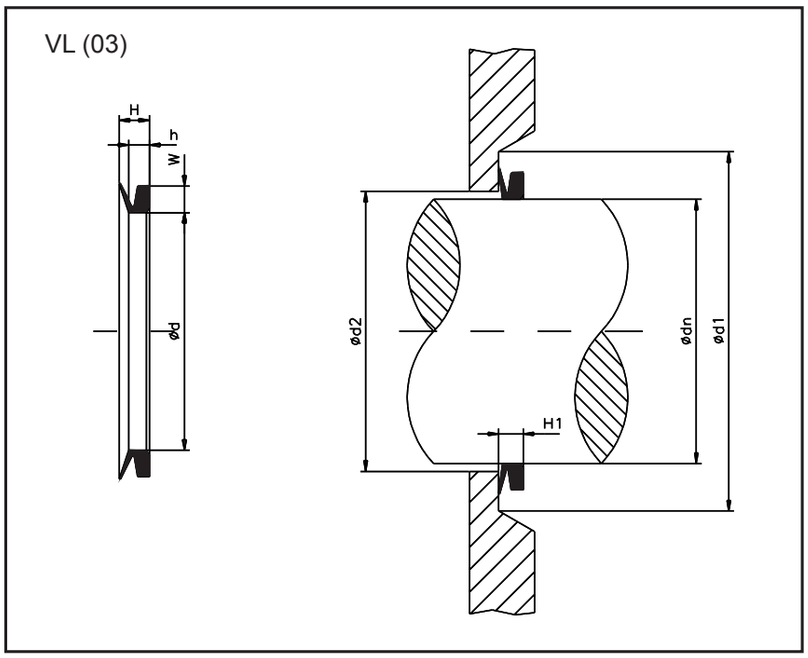

Ring dimensions:

H	=	10,5
h	=	6,0
W	=	6,5

Assembly dimensions:

H1	=	8	±	1,5
d2 max	=	dn	+	5,0
d1 min	=	dn	+	20,0

Type VL

dn	d	Part N°.
135 - 145	126,00	VL 140 V-ring NBR
145 - 155	135,00	VL 150 V-ring NBR
155 - 165	144,00	VL 160 V-ring NBR
165 - 175	153,00	VL 170 V-ring NBR
175 - 185	162,00	VL 180 V-ring NBR
185 - 195	171,00	VL 190 V-ring NBR
190 - 210	180,00	VL 200 V-ring NBR
210 - 235	198,00	VL 220 V-ring NBR
235 - 265	225,00	VL 250 V-ring NBR
265 - 290	247,00	VL 275 V-ring NBR

dn	d	Part N°.
290 - 310	270,00	VL 300 V-ring NBR
310 - 335	292,00	VL 325 V-ring NBR
335 - 365	315,00	VL 350 V-ring NBR
365 - 390	337,00	VL 375 V-ring NBR
390 - 430	360,00	VL 400 V-ring NBR
410 - 440	425,00	VL 425 V-ring NBR
430 - 480	405,00	VL 450 V-ring NBR
480 - 530	450,00	VL 500 V-ring NBR
530 - 580	495,00	VL 550 V-ring NBR
580 - 630	540,00	VL 600 V-ring NBR

These sizes also available in FPM, Silcone und CR.

Example of ordering :

VL	220	V-ring	NBR

Type
Nominal diameter
Design
Standard material

Material:

NBR
FPM
Silicone
CR

Design:

VA
VS
VL
VE

WARNING: Limits of application stated herein are standard values. They could be individually transgressed with due consideration to respective service conditions. In the event of a large duty cycle, pulsating operation and other complex operational conditions, simultaneous transgression of these values is not recommended. Due to a large variety of service conditions that may arise in course of actual use, the company does not take responsibility of or guarantee the functional accuracy of the individual components. Rights for changes are reserved.

V-ring
VE

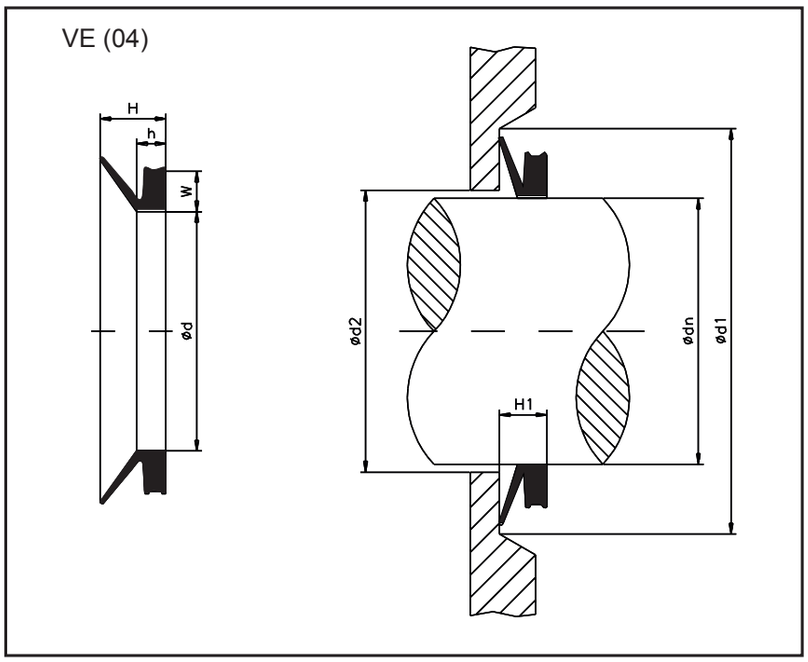

Ring dimensions:

H	=	65,0
h	=	32,0
W	=	30,0

Assembly dimensions:

H1	=	50	±	12,0
d2 max	=	dn	+	24,0
d1 min	=	dn	+	115,0

Type VE

dn	d	Part N°.
450 - 455	439,00	VE 450 V-ring NBR
455 - 460	444,00	VE 455 V-ring NBR
460 - 465	448,00	VE 460 V-ring NBR
465 - 470	453,00	VE 465 V-ring NBR
470 - 475	458,00	VE 470 V-ring NBR
475 - 480	463,00	VE 475 V-ring NBR
480 - 485	468,00	VE 480 V-ring NBR
485 - 490	473,00	VE 485 V-ring NBR
490 - 495	478,00	VE 490 V-ring NBR
495 - 500	483,00	VE 495 V-ring NBR
500 - 505	488,00	VE 500 V-ring NBR
505 - 510	493,00	VE 505 V-ring NBR
510 - 515	497,00	VE 510 V-ring NBR
515 - 520	502,00	VE 515 V-ring NBR
520 - 525	507,00	VE 520 V-ring NBR
525 - 530	512,00	VE 525 V-ring NBR
530 - 535	517,00	VE 530 V-ring NBR
535 - 540	521,00	VE 535 V-ring NBR
540 - 545	526,00	VE 540 V-ring NBR
545 - 550	531,00	VE 545 V-ring NBR
550 - 555	536,00	VE 550 V-ring NBR
555 - 560	541,00	VE 555 V-ring NBR
560 - 565	546,00	VE 560 V-ring NBR
565 - 570	550,00	VE 565 V-ring NBR
570 - 575	555,00	VE 570 V-ring NBR
575 - 580	560,00	VE 575 V-ring NBR
580 - 585	565,00	VE 580 V-ring NBR
585 - 590	570,00	VE 585 V-ring NBR
590 - 600	575,00	VE 590 V-ring NBR
600 - 610	582,00	VE 600 V-ring NBR
610 - 620	592,00	VE 610 V-ring NBR
620 - 630	602,00	VE 620 V-ring NBR

dn	d	Part N°.
630 - 640	612,00	VE 630 V-ring NBR
640 - 650	621,00	VE 640 V-ring NBR
650 - 660	631,00	VE 650 V-ring NBR
660 - 670	640,00	VE 660 V-ring NBR
670 - 680	650,00	VE 670 V-ring NBR
680 - 690	660,00	VE 680 V-ring NBR
690 - 700	670,00	VE 690 V-ring NBR
700 - 710	680,00	VE 700 V-ring NBR
710 - 720	689,00	VE 710 V-ring NBR
720 - 730	699,00	VE 720 V-ring NBR
730 - 740	709,00	VE 730 V-ring NBR
740 - 750	718,00	VE 740 V-ring NBR
750 - 758	728,00	VE 750 V-ring NBR
758 - 766	735,00	VE 760 V-ring NBR
766 - 774	743,00	VE 770 V-ring NBR
774 - 783	751,00	VE 780 V-ring NBR
783 - 792	759,00	VE 790 V-ring NBR
792 - 801	768,00	VE 800 V-ring NBR
801 - 810	777,00	VE 810 V-ring NBR
810 - 821	786,00	VE 820 V-ring NBR
821 - 831	796,00	VE 830 V-ring NBR
831 - 841	805,00	VE 840 V-ring NBR
841 - 851	814,00	VE 850 V-ring NBR
851 - 861	824,00	VE 860 V-ring NBR
861 - 871	833,00	VE 870 V-ring NBR
871 - 882	843,00	VE 880 V-ring NBR
882 - 892	853,00	VE 890 V-ring NBR
892 - 912	871,00	VE 900 V-ring NBR
912 - 922	880,00	VE 920 V-ring NBR
922 - 933	890,00	VE 930 V-ring NBR
933 - 944	900,00	VE 940 V-ring NBR
944 - 955	911,00	VE 950 V-ring NBR

V-ring
VE

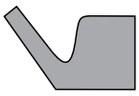

dn	d	Part N°.
955 - 966	921,00	VE 960-04-100
966 - 977	932,00	VE 970-04-100
977 - 988	942,00	VE 980-04-100
988 - 999	953,00	VE 990-04-100
999 - 1010	963,00	VE 1000-04-100
1010 - 1025	973,00	VE 1020-04-100
1025 - 1045	990,00	VE 1040-04-100
1045 - 1065	1008,00	VE 1060-04-100
1065 - 1085	1027,00	VE 1080-04-100
1085 - 1105	1045,00	VE 1100-04-100
1105 - 1125	1065,00	VE 1120-04-100
1125 - 1145	1084,00	VE 1140-04-100
1145 - 1165	1103,00	VE 1160-04-100
1165 - 1185	1121,00	VE 1180-04-100
1185 - 1205	1139,00	VE 1200-04-100
1205 - 1225	1157,00	VE 1220-04-100
1225 - 1245	1176,00	VE 1240-04-100
1245 - 1270	1195,00	VE 1260-04-100
1270 - 1295	1218,00	VE 1280-04-100
1296 - 1315	1240,00	VE 1300-04-100

dn	d	Part N°.
1315 - 1340	1259,00	VE 1325 V-ring NBR
1340 - 1365	1281,00	VE 1350 V-ring NBR
1365 - 1390	1305,00	VE 1375 V-ring NBR
1390 - 1415	1328,00	VE 1400 V-ring NBR
1415 - 1440	1350,00	VE 1425 V-ring NBR
1440 - 1465	1374,00	VE 1450 V-ring NBR
1465 - 1490	1397,00	VE 1475 V-ring NBR
1490 - 1515	1419,00	VE 1500 V-ring NBR
1515 - 1540	1443,00	VE 1525 V-ring NBR
1540 - 1570	1467,00	VE 1550 V-ring NBR
1570 - 1600	1495,00	VE 1575 V-ring NBR
1600 - 1640	1524,00	VE 1600 V-ring NBR
1640 - 1680	1559,00	VE 1650 V-ring NBR
1680 - 1720	1596,00	VE 1700 V-ring NBR
1720 - 1765	1632,00	VE 1750 V-ring NBR
1765 - 1810	1671,00	VE 1800 V-ring NBR
1810 - 1855	1714,00	VE 1850 V-ring NBR
1855 - 1905	1753,00	VE 1900 V-ring NBR
1905 - 1955	1794,00	VE 1950 V-ring NBR
1955 - 2010	1844,00	VE 2000 V-ring NBR

These sizes also available in FPM, Silcone and CR.

Example of ordering :

VE 770 V-ring NBR

Type
Nominal diameter
Design
Standard material

Materials:

NBR
FPM
Silicone
CR

Design:

VA
VS
VL
VE

WARNING: Limits of application stated herein are standard values. They could be individually transgressed with due consideration to respective service conditions. In the event of a large duty cycle, pulsating operation and other complex operational conditions, simultaneous transgression of these values is not recommended. Due to a large variety of service conditions that may arise in course of actual use, the company does not take responsibility of or guarantee the functional accuracy of the individual components. Rights for changes are reserved.

Radial Lip Seal

Table of contents:

Standard types of shaft seals
Technical data:
- Description of rotary shaft seals
- Functional principle
- Metallic housing
- Garter spring
- Elastomeric sealing materials
Mounting and operation:
- Shaft
- Housing bore
- Lubrication
- Temperature
- Pressure
Manufacturing and Quality assurance:
- Press fit allowance and permissible eccentricity
- Final inspection standard
Dina Seal
Storage and Handling
Table of sizes
Example for ordering

Shaft seal is an indispensable component for packing / sealing of rotary shafts in many machine construction applications. A careful choice with regards to the proper form and suitable material ensures long service life and safe functioning of the component.

Special Features:

- Good wear resistance, low friction
- Small housings and easy to produce
- Wide choice of sizes and forms
- High rotational velocity possible
- Many sizes also available in FPM and silicones
- Stainless Steel springs for special applications also available

Material:	Rubber elastomer / metal combination
Operational pressure:	up to 0.8 Mpa (8 bar) as per construction
Velocity:	rotary to 38 m/s (depending on material)
Temperature:	-60° C up to +220° C -”-

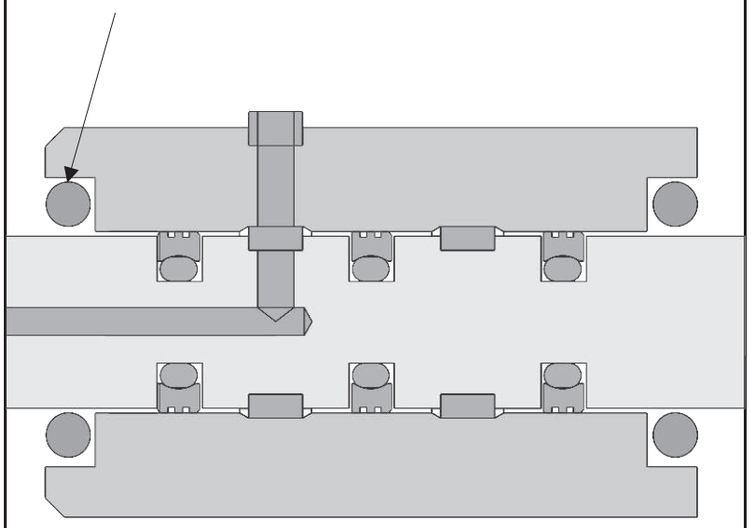

Radial Lip Seal

Standard Types of shaft seals (as per DIN 3760)

CB	A	Vulcanised metal cage sealing lip with garter spring
CC	AS	Vulcanised metal cage sealing lip with garter spring and additional dust lip
DB	C	Metallic housing with reinforcing / stiffening cover / cap sealing lip with garter spring
DC	CS	Metallic housing with reinforcing / stiffening cover / cap sealing lip with garter spring and additional dust lip
BB	B	Metallic housing sealing lip with garter spring
BC	BS	Metallic housing sealing lip with garter spring and additional dust lip
	Further Types ----------:	
CC-P	P	Vulcanised metal cage reinforced sealing lip for excess pressure and additional dust lip
DINA	O	Vulcanised metal cage sealing lip without garter spring

For special purpose applications, radial shaft seals with hydrodynamic right, left or variable twist / turn on the sealing lip can also be supplied. Please contact your customer support department for assistance.

2. Technical Data

2.1. Description of Rotary Shaft Seals

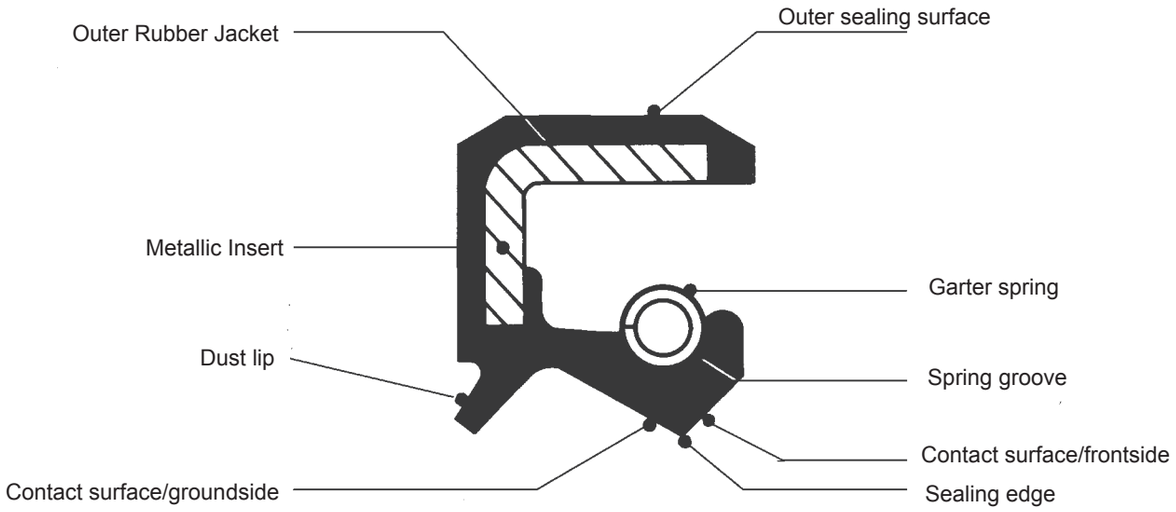

2.2 Functional Principle

The space between the sealing lip and the shaft is very important. Sealing effect is achieved through pre/stressing of the sealing lip, in that the internal diameter of the sealing lip is chosen to be slightly smaller than the shaft diameter. The garter spring provides constant pressure that maintains radial pressure on the shaft thus the sealing edge is flattened to a certain widthA thin fluid film builds up under the flattened area. Its thickness (film) should be 1 to 3 um to avoid leakage.The lubricating film works as an interface between external air and the fluid. A fissure in this film of lubricant leads to leakage. Thus it can occur if the shaft causes cracks in sealng surface / area (see drawing)

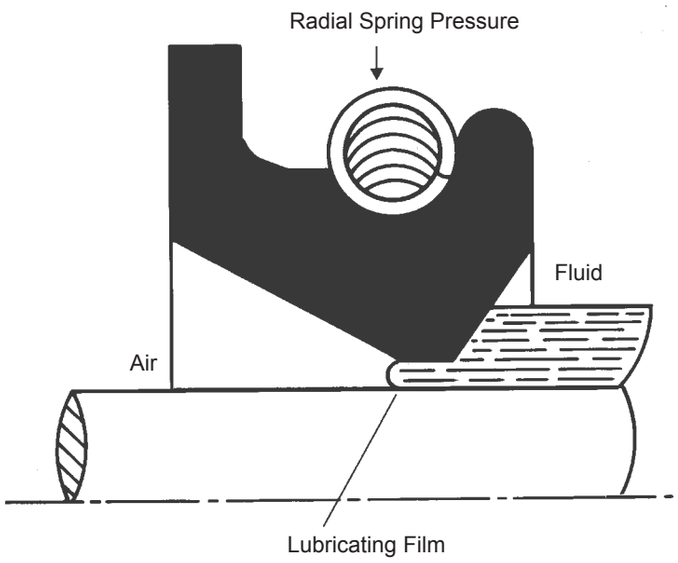

2.3. Metallic Housing

Metal inserts or the housing are used to impart stability and strength to the seal. They are usually made from cold rolled steel as per DIN 1624.

To avoid rusting and chemical attack, stainless steel can be used.
- Chromium-Nickel AISI 304 (DIN 1.4301 - V2A)
- Chromium-Nickel-Molybden AISI 316 TI (DIN 1.4401 - V4A)

2.4. Garter Spring

This serves to maintain the radial force that is exercised by the sealing lip on the shaft surface. It is usually made from harmonic spring steel wire C 72 or stainless Chromium/Nickel steel wire AISI 302 (DIN 1.4300)

For special purpose applications, stainless steel springs in AISI 316 TI (DIN 1.401 - V4A) are also supplied.

All our standard shaft seals produced from FPM (Viton) material are provided with stainless steel springs as per AISI 302

2.5. Elastomeric Sealants

2.5.1 Nitrile Rubber NBR

This elastomer is a copolymer of butadiene and acrylonitrile and is used in conventional applications.

Physical data:
- Operational temperature : -40 °C up to +120 °C (+90 °C in water)
- Tensile strength : to 15 MPa
- Standard colour : black

Advantages:
- Good resistance to mineral oils and lubicating greases
- Good resistance to water and coolants
- High resistance to cracking

Limitations:
- Low resistance to mixed hypoid oils
- Low resistance to oxygen, weathering and sunlight
- Low resistance to polar fluids like Kentone, Ethers and Esters
- Low resistance to chlorine containing hydro carbons like Tetrachloride, Triclorethylen)
- Low resistance to aromatic solvents
- No resistance to truck brake oils (based with glycol)

2.5.2 Fluoro elastomers / Rubber FPM

Mainly known by trade names such as VITON from DUPONT, TECHNOFLON from MONTEDISON an FLUOREL from 3M. It posseses good chemical resistance and is recommended for high temperature use.

Physical data:
- Operational temperature : -30 °C up to +200 °C
- Tensile strength : to 15 MPa
- Standar colour : brown

Advantages:
- Outstanding resistance to mineral oils and strongly mixed hypoide oils
- Outstanding resistance to acids

- Outstanding resistance to aromatic and chlorine containing hydrocarbons.
- Outstanding resistance to ageing, oxygen and weathering.

Limitations:
- Restricted low temperature flexibility
- Low resistance to polar fluids such as Ketones, Ethers, Esters)

2.5.3 Silicone Rubber SIL
Also known as MVQ

Physical data:
- Operational temperature : -60 °C up to +220 °C
- Tensile strength : to 3-7 MPa
- Standard colour : red

Advantages:
- Retains flexibility continued heatingat low (very low) temperatures
- Withstands contiued haeating even at very high temperatures without hardening
- Resistant to mineral oils and lubricant greases
- Outstanding resistance to ageing, weathering and oxygen
- Good alkali resistance

Limitations:
- Not recommended for use with hydrocarbons such as fuels or paraffins, light petroleum oils and steam pressure above 3,5 bar.
- Not resistant to hot water, acids and non mineral truck brake fluids
- Low tensile and cracking resistance
- Poor resistance to wear and tear

3. Mounting and Operating

3.1. Shaft

Shaft surface finish is extremely important for effective sealing and longer service life. Basically, surface hardness of the (running) face must increase with increasing peripheral velocity of shaft.

As per DIN 3760 the requisite minimal hardness should be 45 HRC. This hardness should be 55 HRC at 4 m/s and 60 HRC at 10 m/s. Lubrication is also very important. This is discussed further in part 3.3 of this catalogue. As specified by DIN 3760, surface finish must be friction and cause higher temperatures. Errors in workmanship and fabrication, scratches on shaft must be avoided.

Even small defects may conrtibute to increase in lubricant film thickness, causing leakage. It is important to avoid parallel chamfering. This can cause pump effect and leakage.

.

Radial Lip Seal

Hardened steel is most commonly used for shafts. Process tolerance is h1 1 in accordance with ISO STANDARD UNI-6388-68 (see table).

Shaft diameter from to (mm)		Tolerance h11
6	10	0,000 - 0,090
10	18	0,000 - 0,110
18	30	0,000 - 0,130
30	50	0,000 - 0,160
50	80	0,000 -0,190

Shaft diameter from to (mm)		Tolerance h11
80	120	0,000 -0,220
120	180	0,000 -0,250
180	250	0,000 -0,290
250	315	0,000 - 0,320
315	400	0,000 - 0,360

The most convenient operational conditions are those, when the shaft is perfectly centred and concentric with respect to the axis of the radial shaft seal, while turning. Naturally, this does not always occur and some radial run-out is inevitable.
This should be minimised since there is a danger , particularly at high temperatures, that the sealing edge cannot follow the shaft on account of its inertia.

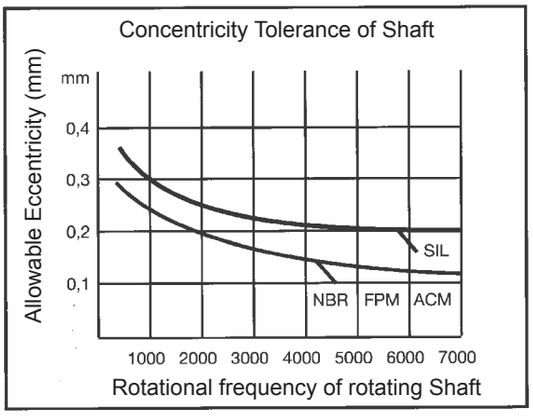

It is therefore important to place the shaft seal as close as possible to the bearing to keep run-out as low as possible for the seal. Eccentricity between shaft and housing bore should be as low as possible. This significantly reduces unilateral loading / stress (wear) of the sealing lip

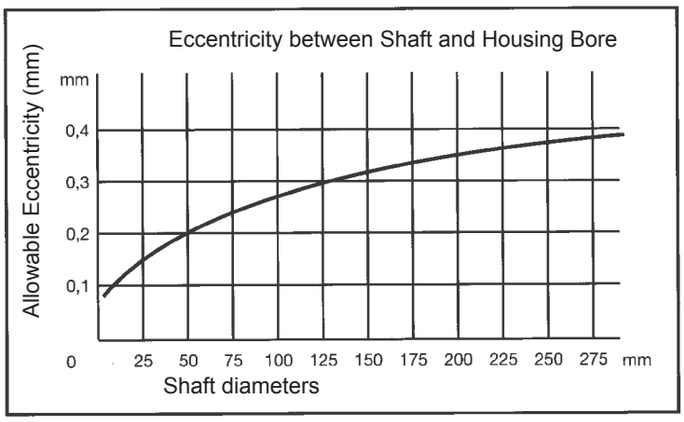

3.2. Housing Bore

Good pressfit of shaft seal in the housing bore is of extreme importance.

For bore diameter, the tolerance zone / clearance space H8 is preferred as per ISO Standard UNI-6388-68 (See table)

Bore diameter from (mm)	to (mm)	Tolerance H 8
10	18	+0,027 0,000
18	30	+0,033 0,000
30	50	+0,039 0,000
50	80	+0,046 0,000
80	120	+0,054 0,000

Bore diameter von (mm)	bis (mm)	Tolerance H 8
120	180	+0,063 0,000
180	250	+0,072 0,000
250	315	+0,081 0,000
315	400	+0,081 0,000

As per DIN 3760, maximal surface roughness (peak to valley distance) Rt = 16 µm. We recommend a stopper or safety ring , against which the seal can be fixed. If this is not possible, care should be taken that the seal is in alignment with the axis of shaft. To simplify assembly, the housing should be bevelled between 5° und 10° on the front face - with a depth of 1 mm for rings up to 10 mmthickness - and a depth between 1.2 - 1.5 mm for rings than 10 mm. On the front face, the shaft must also exhibit a bevel with an angle of I15° - 25° with rounded and polished transition.

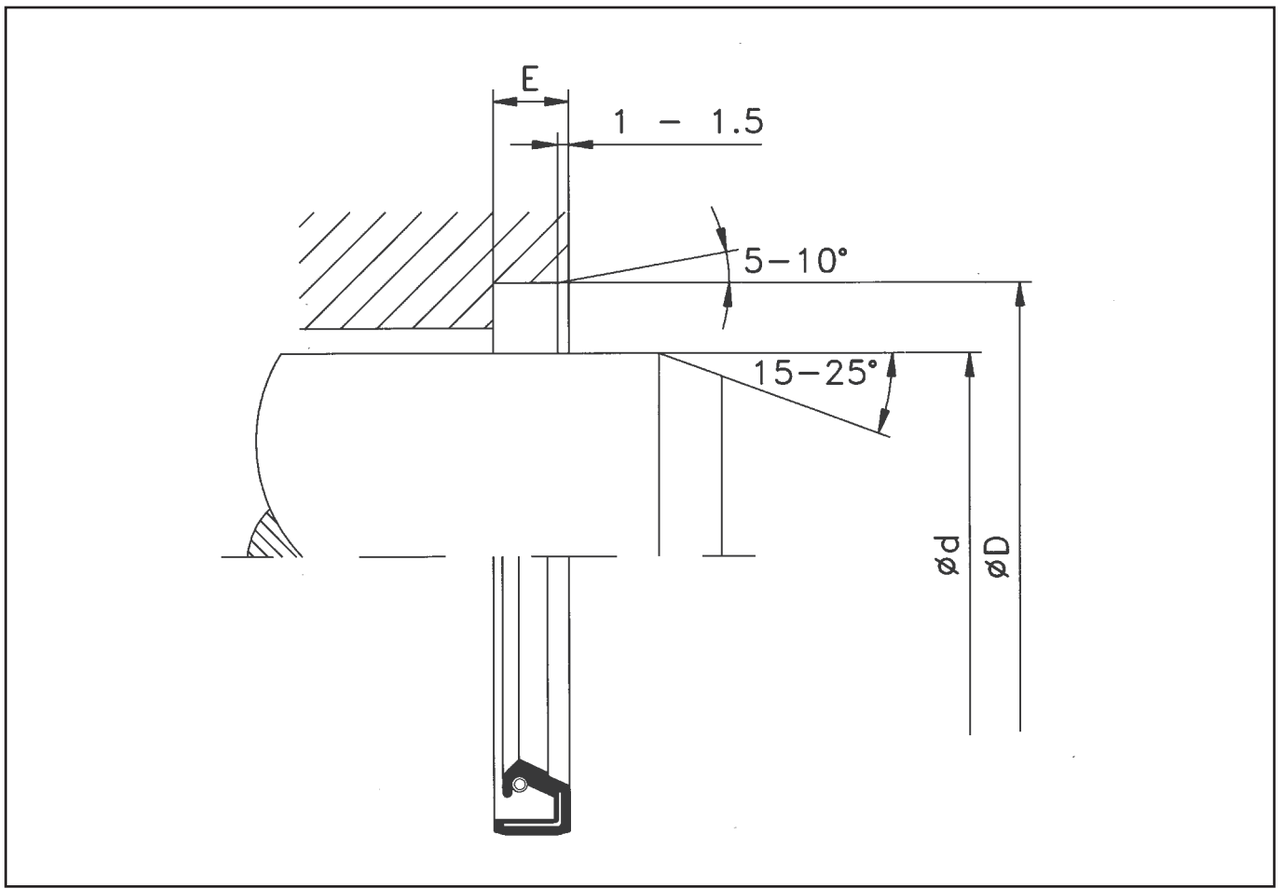

3.3 Lubrication

Lubrication is very important for proper functioning of the seal. Actually, the sealing lip does not move directly on the sealing surface but it moves on a so called lubricating film. (see par. 2.2) Film thickness usually is 1-3 µm though it is influenced by various factors such as oil viscocity, surface finish of shaft and pre-stressing of seal. The first few hours of operation (run in operation) are important from the view point of lubricant film build up and also the flattening of the sealing edge that occurs.

Certain amount of leakage is possible during this period of time.

An adequate lubricating film strongly reduces the friction between sealing lip and shaft and also acts as a coolant against the resulting heat. The lower this temperature, the longer the life of the seal and its endurance. If the liquid possesses merely a low lubricity (like water and aqueous solutions) a shaft sealing system with a dust lip (AS, BS, or CS) needs to be used. In this case, take care that the space between the two lips is filled with lubricating grease.

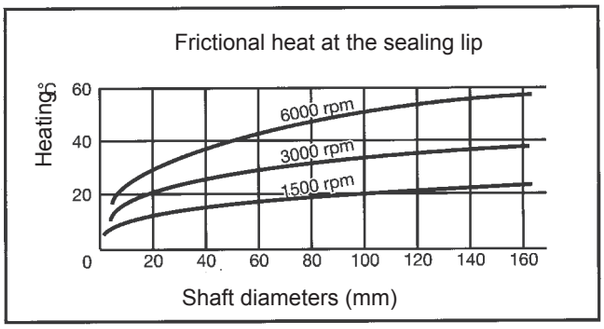

Frictional heat also depends on peripheral velocity of the shaft. Friction will not merely harm the sealing lip material but can also lead to frictional losses. When only small forces are being transmitted, this can have an adverse effect.

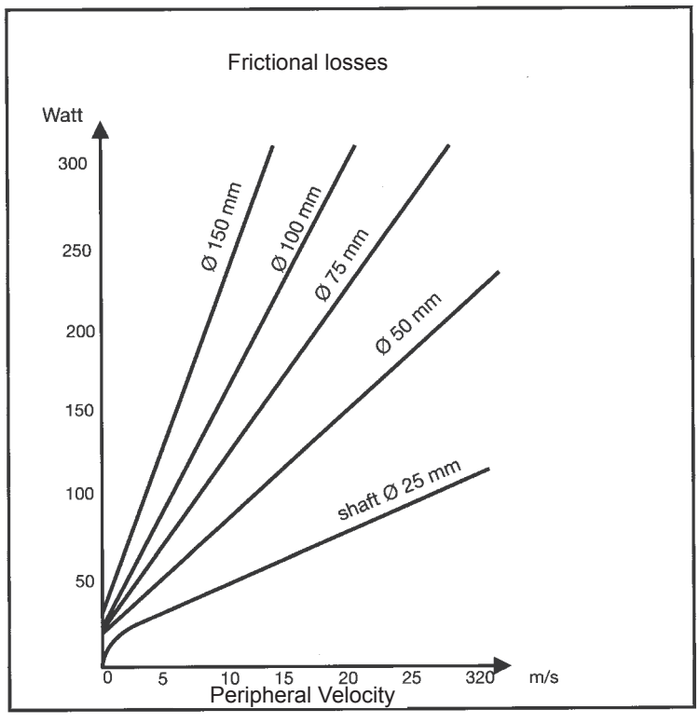

3.4. Temperature

Temperature at the sealing lip is the temperature of the medium due to frictional heat. The higher the actual service temperature, the faster the ageing process of the elastomer which also influences the function of the sealing lip and shaft surface.

Frictional heat depends on peripheral velocity, pre-stressing on the sealing lip, surface finish of shaft, lubricant medium etc.
The graph below shows allowable values with reference to various materials.

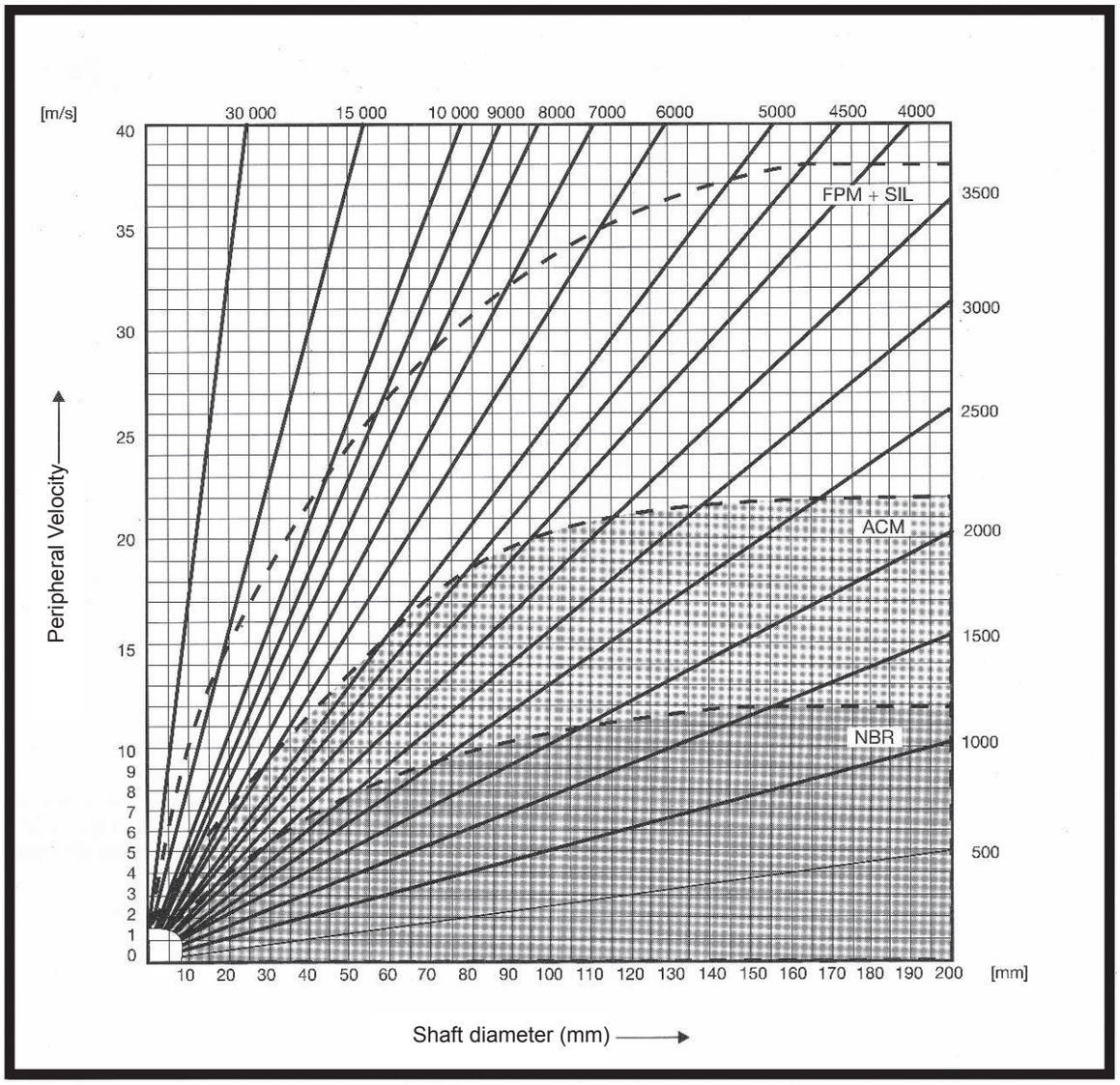

3.5 Pressure

Differential pressure is zero or minimal for most applications. Where the radial shaft seals are subject to pressure, the sealing lip is pressed against the shaft leading to increased temperature. In most cases, increase in temperature can cause the sealing lip to turn around on the axis.

At over 0.2 bar and high RPM or at over 0.5 bar and low RPM , back-up rings or specially developed radial shaft seals with thick dynamic lip and or metal a support need to be used. In the last case, we refer to our P-type (CC-P) Inspite of this and the shaft seals of type P the allowable excess pressure is limited.

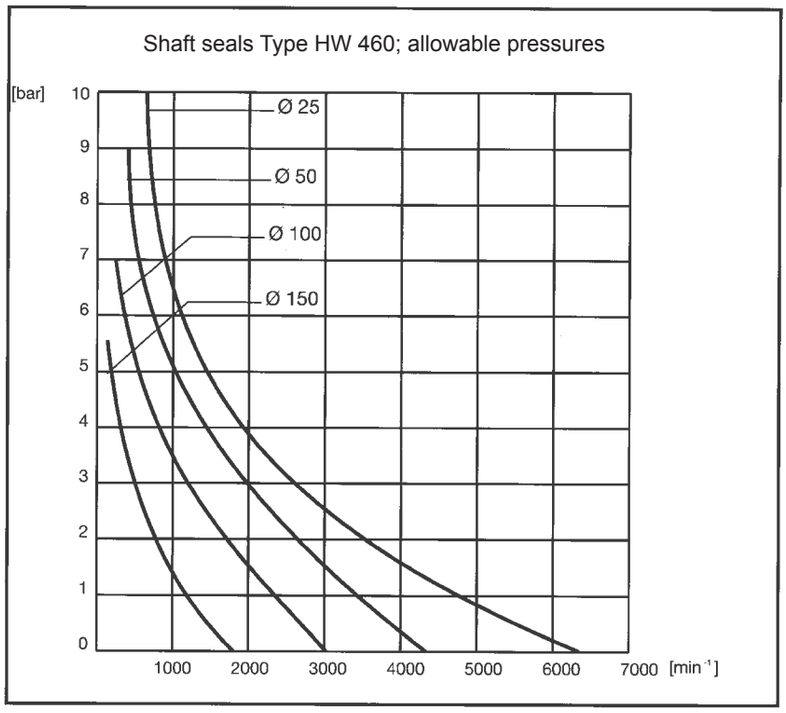

On enquiry we can supply shaft seals that have a specially reinforced sealing lip. These can withstand pressures above the allowable limit given. Standard sizes of radial shaft seals can be used when back rings are assembled. Back rings are costly and the necessary mounting space may not be always available. Many times, back rings cannot be used since they require very careful assembly and a very low radial run out.

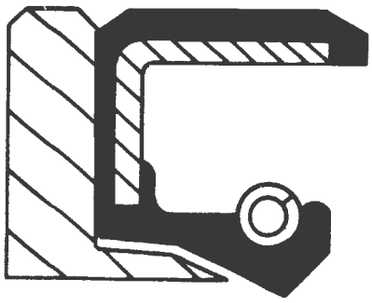

Specially developed radial shaft seals (P-types) are prefered here, when a more careful assembly and a lower radial run-out than the normal is required.

4. Production and Quality Assurance

Radial rotary shaft seals are manufactured according to German Standard DIN 3760 and Quality assurance standards ISO 9000 ff.

All production phases are checked and all measurements are recorded and stored for eventual tracing.

4.1 Press fit allowance and Permissible eccentricity

in accordance with German Standard DIN 3760

Outer diameter (mm)		Press fit allowance CB	CC	DB - CC-P	Permissible eccentricity DB - CC-P
up	to 50	+0,30 +0,15		+0,20 +0,10	0,25
over 50	to 80	+0,35 +0,20		+0,23 +0,13	0,35
over 80	to 120	+0,35 +0,20		+0,25 +0,15	0,50
over 120	to 180	+0,45 +0,25		+0,28 +0,20	0,65
over 180	to 300	+0,45 +0,25		+0,30 +0,20	0,80
over 300	to 500	+0,55 +0,30		+0,35 +0,23	1,00

4.2 Final Inspection Standard

In accordance with our production standard and DIN 3761 Part 4.

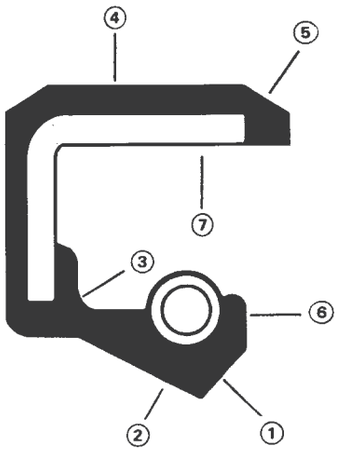

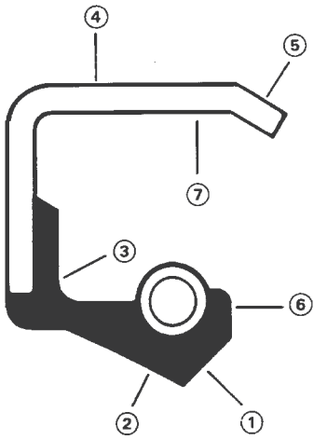

	Zone	Not permitted	Permitted
1 + 2	Sealing Edge 1 = Front side 2 = Back side	Cracks in Sealing Edge	No faults permitted
3	Radius of vulcanisation	Vulcanisation defects	
4	External diameter of shaft	Faults that may influence seal at its outer diameter	Minor defects, provided that at least 2 / 3 of the outer diameter at this point are in order.
5	Chamfer	Faults that adversely influence seal assembly process	
6	Spring retention lip	Contractions that may initiate a split	Small contractions
7	Inner wall	Loose parts	Parts that are firmly attached to the inner wall

The contact surface of the sealing lip is defined according to DIN 3761 part 4. as follows:

Shaft diameter	Front face width	Back side width
up to 50 mm	0,5 mm	1,2 mm
51 to 120 mm	0,8 mm	1,5 mm
over 121 mm	1,0 mm	2,0 mm

.

6. Storage and Handling

Certain precautions must be exercised during storage to avoid material damage. Radial shaft seals must be stored in a dust free and dry environment, and they must remain in their original packaging. This should be opened just before assembly. Specimens should be re-packed after inspection. Excess humidity adversely affects some elastomers and may also initiate corrosion of metal housing and spring.

Do not throw radial shaft seals on shelves, or into boxes, or hang them on wires, hooks or nails. The sealing lip is likely to be damaged. Seals are to be stacked horizontally.

We recommend that seals are stored as per -FIRST IN - FIRST OUT - principle, to avoid ageing on the shelf itself. Avoid to storing the seals close to heat sources or eelectric equipment that can give off ozone. Protect from direct sunlight.

Radial Lip Seal

Ø d h11	Ø D H8	E +0,3	CB	CC	DB	DC	BB	BC	CC-P	DINA	Part N°.
4,00	12,00	6,00	x								CB 4/12x6
5,00	15,00	6,00	x								CB 5/15x6
5,00	16,00	6,00	x								CB 5/16x6
6,00	11,00	4,50				x					DC 6/11x4,5
6,00	12,00	4,50	x								CB 6/12x4,5
6,00	14,00	6,00	x			x					X 66/14x6
6,00	15,00	4,00	x								CB 6/15x4
6,00	16,00	5,00		x							CC 66/16x5
6,00	16,00	7,00	x								CB 6/16x7
6,00	19,00	5,00	x								CB 6/19x5
6,00	19,00	6,00	x								CB 6/19x6
6,00	19,00	7,00	x								CB 6/19x7
6,00	22,00	7,00	x								CB 6/22x7
7,00	14,00	5,00	x								CB 7/14x5
7,00	15,00	5,00	x								CB 7/15x5
7,00	16,00	7,00	x								CB 7/16x7
7,00	18,00	8,00		x							CC 7/18x8
7,00	22,00	7,00	x								CB 7/22x7
7,80	13,70	2,50								x	DINA 7,8/13,7x2,5
8,00	16,00	3,50								x	DINA 8/16x3,5
8,00	16,00	5,00				x	x				X 8/16x5
8,00	16,00	7,00	x	x							X 8/16x7
8,00	18,00	5,00	x								CB 8/18x5
8,00	18,00	6,00	x	x							X 8/18x6
8,00	22,00	7,00	x	x							X 8/22x7
8,00	22,00	8,00	x								CB 8/22x8
8,00	24,00	7,00	x								CB 8/24x8
8,00	25,00	7,00	x								CB 8/25x7
8,50	18,00	7,00	x								CB 8,5/18x7
9,00	18,00	7,00		x							CC 9/18x7
9,00	18,00	8,00		x							CC 9/18x8
9,00	20,00	6,00							x		CC-P 9/20x6
9,00	22,00	7,00	x								CB 9/22x7
9,00	24,00	7,00	x								CB 9/24x7
9,00	26,00	7,00	x								CB 9/26x7
10,00	16,00	5,00	x								CB 10/16x5
10,00	16,50	4,00	x								CB 10/16,5x4
10,00	18,00	4,00	x								CB 10/18x4
10,00	18,00	4,80		x							CC 10/18x4,8
10,00	18,00	6,00	x								CB 10/18x6
10,00	19,00	7,00	x	x							X 10/19x7

Radial Lip Seal

Ø d h11	Ø D H8	E +0,3	CB	CC	DB	DC	BB	BC	CC-P	DINA	Part N°.
10,00	19,00	9,00		X							CC 10/19x9
10,00	22,00	6,00	X	X					X		X 10/22x6
10,00	22,00	7,00	X								CB 10/22x7
10,00	24,00	7,00	X								CB 10/24x7
10,00	26,00	5,50	X								CB 10/26x5,5
10,00	26,00	7,00	X	X					X		X 10/26x7
10,00	30,00	7,00	X								CB 10/30x7
11,00	17,00	4,00	X								CB 11/17x4
11,00	22,00	7,00	X								CB 11/22x7
11,00	26,00	7,00	X								CB 11/26x7
11,00	30,00	7,00		X							CC 12/30x7
12,00	18,00	4,00								X	DINA 120/18x4
12,00	18,00	4,50		X							CC 12/18x4,5
12,00	18,35	3,00								X	DINA 12/18,35x3
12,00	19,00	4,00					X				BB 12/19x4
12,00	19,00	5,00	X								CB 12/19x5
12,00	20,00	4,50					X				BB 12/20x4,5
12,00	20,00	5,00		X							CC 12/20x5
12,00	22,00	4,00	X								CB 12/22x4
12,00	22,00	5,00	X								CB 12/22x5
12,00	22,00	6,50							X		CC-P 12/22x6,5
12,00	22,00	7,00	X	X							X 12/22x7
12,00	22,00	7,50							X		CC-P 12/22x7,5
12,00	24,00	4,50	X								CB 12/24x4,5
12,00	24,00	6,00	X								CB 12/24x6
12,00	24,00	7,00	X	X							X 12/24x7
12,00	25,00	4,50	X								CB 12/25x4,5
12,00	25,00	8,00	X								CB 12/25x8
12,00	26,00	8,00	X								CB 12/26x8
12,00	28,00	5,00	X								CB 12/28x5
12,00	28,00	7,00	X	X							X 12/28x7
12,00	30,00	7,00	X	X			X				X 12/30x7
12,00	32,00	7,00	X								CB 120-27-100
12,00	35,00	7,00	X								CB 12/35x7
12,50	19,00	5,00	X								CB 12,5/19x5
12,50	20,00	5,00	X								CB 12,5/20x5
12,50	20,00	6,00	X								CB 12,5/20x6
12,50	22,00	4,50	X								CB 12,5/22x4,5
12,50	22,00	5,00	X								CB 12,5/22x5
12,70	22,23	6,35		X							CC 12,7/22,23x6,35
12,70	26,00	6,00	X								CB 12,7/26x6
12,80	19,40	2,50								X	DINA 12,8/19,4x2,5
13,00	20,00	4,00					X	X			X 13/20x4
13,00	22,00	4,00	X								CB 13/22x4
13,00	22,00	5,00	X								CB 13/22x5
13,00	22,00	7,00		X							CC 13/22x7
13,00	26,00	5,00	X								CB 13/26x5
13,00	30,00	7,00	X								CB 13/30x7
13,00	35,00	10,00	X								CB 13/35x10
14,00	22,00	4,00	X								CB 14/22x4

Radial Lip seal

Ø d h11	Ø D H8	E +0,3	CB	CC	DB	DC	BB	BC	CC-P	DINA	Part N°.
14,00	22,00	5,00		x							CC 14/22x5
14,00	24,00	5,00		x							CC 14/24x5
14,00	24,00	6,00					x				BB 14/24x6
14,00	24,00	7,00	x	x							X 14/24x7
14,00	28,00	7,00	x	x							X 14/28x7
14,00	30,00	7,00	x								CB 14/30x7
14,00	30,00	8,00	x								CB 14/30x8
14,00	30,00	10,00		x							CC 14/30x10
14,00	35,00	7,00	x								CB 14/35x7
14,00	35,00	10,00	x								CB 14/35x10
15,00	21,00	5,00	x								CB 15/21x5
15,00	22,00	5,00						x			BC 15/22x5
15,00	24,00	5,00	x								CB 15/24x5
15,00	24,00	6,00		x							CC 15/24x6
15,00	24,00	7,00	x	x					x		X 15/24x7
15,00	25,00	3,00								x	DINA 15/25x3
15,00	25,00	5,00	x								CB 15/25x5
15,00	25,00	7,00	x								CB 15/25x7
15,00	25,40	5/7		x						x	X 15/25,4x5/7
15,00	25,50	4,60	x								CB 15/25,5x4,6
15,00	26,00	7,00	x	x				x			X 15/26x7
15,00	27,00	7,00	x	x							X 15/27x7
15,00	28,00	4,00	x					x			X 15/28x4
15,00	28,00	6,00	x								CB 15/28x6
15,00	30,00	4,50	x								CB 15/30x4,5
15,00	30,00	7,00	x								CB 15/30x7
15,00	30,00	10,00	x	x							X 15/30x10
15,00	32,00	7,00	x								CB 15/32x7
15,00	32,00	7,00		x							CC 15/32x7
15,00	35,00	6/7						x			BC 15/35x6/7
15,00	35,00	5,00	x								CB 15/35x5
15,00	35,00	6,00						x	x		X 15/35x6
15,00	35,00	7,00	x	x							X 15/35x7
15,00	35,00	8,00	x								CB 15/35x8
15,00	35,00	10,00	x								CB 15/35x10
15,00	42,00	7,00	x								CB 15/42x7
15,00	42,00	10,00									
15,00	50,00	7,00	x								CB 15/50x7
16,00	22,20	4,00	x								CB 16/22,2x4
16,00	22,70	2,00								x	DINA 16/22,7x2
16,00	24,00	5,00	x								CB 16/24x5
16,00	26,00	7,00	x								CB 16/26x7
16,00	28,00	7,00	x	x					x		X 16/28x7
16,00	30,00	5,00	x								CB 16/30x5
16,00	30,00	6,00	x								CB 16/30x6
16,00	30,00	6,60	x								CB 16/30x6,6
16,00	30,00	7,00	x								CB 16/30x7
16,00	32,00	9,00	x								CB 16/32x9
16,00	35,00	6/8									
16,00	35,00	7,00	x								CB 16/35x7
16,00	35,00	10,00	x								CB 16/35x10

Radial Lip seal

Ø d h11	Ø D H8	E +0,3	CB	CC	DB	DC	BB	BC	CC-P	Dina	Part N°.
16,00	40,00	10,00	x								CB 16/40x10
17,00	25,00	4,00	x								CB 17/25x4
17,00	26,00	6,00	x								CB 17/26x6
17,00	28,00	6,00	x								CB 17/28x6
17,00	28,00	7,00	x	x			x		x		X 17/28x7
17,00	28,00	7,30	x								CB 17/28x7,3
17,00	28,00	8,00	x								CB 17/28x8
17,00	30,00	5,00	x	x							X 17/30x5
17,00	30,00	7,00	x	x							X 17/30x7
17,00	32,00	5,00	x								CB 17/32x5
17,00	32,00	7,00	x								CB 17/32x7
17,00	35,00	7,00	x	x					x		X 17/35x7
17,00	35,00	8,00	x	x							X 17/35x8
17,00	37,00	4,00	x								CB 17/37x4
17,00	40,00	7/7,5							x		CC-P 17/40x7/7,5
17,00	40,00	7,00	x	x							X 17/40x7
17,00	40,00	8,50	x								CB 17/40x8,5
17,00	40,00	10,00	x								CB 17/40x10
17,00	47,00	7,00	x								CB 17/47x7
17,46	23,81	3,18								x	DINA 17,46/23,81x3,18
17,46	31,75	7,93									
17,80	26,20	3,50	x								CB 17,8/26,2x3,5
18,00	24,00	4,00								x	DINA 18/24x4
18,00	28,00	7,00	x	x							X 18/28x7
18,00	30,00	5,00	x								CB 18/30x5
18,00	30,00	7,00	x	x							X 18/30x7
18,00	30,00	8,00								x	DINA 18/30x8
18,00	32,00	7,00	x	x							X 18/32x7
18,00	32,00	8,00	x							x	X 18/32x8
18,00	35,00	7,00	x								CB 18/35x7
18,00	35,00	8,00	x								CB 18/35x8
18,00	35,00	10,00	x								CB 18/35x10
18,00	40,00	7,00	x								CB 18/40x7
19,00	27,00	6,00	x								CB 19/27x6
19,00	27,20	5,00							x		CC-P 19/27,2x5
19,00	30,00	7,00		x			x				X 19/30x7
19,00	30,50	8,5/11,5		x							CC 19/30,5x8,5/11,5
19,00	32,00	7,00	x	x							X 19/32x7
19,00	32,00	10,00	x	x							X 19/32x10
19,00	35,00	10,00	x								CB 19/35x10
19,00	42,00	7,00	x								CB 19/42x7
19,00	47,00	10,00	x								CB 19/47x10
20,00	26,00	4,00								x	DINA 20/26x4
20,00	28,00	4,00	x							x	X 20/28x4
20,00	28,00	6,00	x					x			X 20/28x6
20,00	28,00	7,00	x								CB 20/28x7
20,00	30,00	4,00	x								CB 20/30x4
20,00	30,00	5,00	x	x							X 20/30x5
20,00	30,00	6,00	x								CB 20/30x6
20,00	30,00	7,00	x	x							X 20/30x7
20,00	31,00	7,00					x				BB 20/31x7
20,00	32,00	7,00	x	x			x				X 20/32x7
20,00	34,10	10/13		x							CC 20/34,1x10/13
20,00	35,00	7/7,5							x		CC-P 20/35x7/7,5

Radial Lip seal

Ø d h11	Ø D H8	E +0,3	CB	CC	DB	DC	BB	BC	CC-P	DINA		Part N°.
20,00	35,00	5,00	x									CB 20/35x5
20,00	35,00	6,00		x						x		X 20/35x6
20,00	35,00	7,00	x	x								X 20/35x7
20,00	35,00	8,00	x									CB 20/35x8
20,00	35,00	10,00	x									CB 20/35x10
20,00	37,00	8,00	x									CB 20/37x8
20,00	38,00	7,00	x									CB 20/38x7
20,00	38,00	8,00		x								CC 20/38x8
20,00	40,00	8/13							x			BC 20/40x8/13
20,00	40,00	6,00	x	x								X 20/40x6
20,00	40,00	7,00	x	x								X 20/40x7
20,00	40,00	8,00	x									CB 20/40x8
20,00	40,00	10,00	x									CB 20/40x10
20,00	42,00	6,00	x	x								X 20/42x6
20,00	42,00	7,00	x	x								X 20/42x7
20,00	42,00	10,00		x								CC 20/42x10
20,00	45,00	7,00	x	x								X 20/45x7
20,00	47,00	7,00	x	x								X 20/47x7
20,00	47,00	8,00	x									CB 200-31-100
20,00	47,00	10,00	x		x				x			X 20/47x8
20,00	48,40	7,00	x									CB 20/48,4x7
20,00	52,00	7,00										CB 20/52x7
20,00	52,00	10,00	x	x								X 20/52x10
20,00	72,00	10,00	x									CB 20/72x10
20,40	27,15	2,00									x	DINA 20,4/27,15x2
21,00	40,00	7,00	x	x								X 21/40x7
21,80	38,10	6,35										CB 21,8/38,1x6,35
22,00	32,00	7/9	x						x			X 22/32x7/9
22,00	32,00	5,50	x									CB 22/32x5,5
22,00	32,00	7,00		x						x		X 22/32x7
22,00	35,00	10/13		x								CC 22/35x10/13
22,00	35,00	6/6,5	x							x		X 22/35x6/6,5
22,00	35,00	7,00	x	x								X 22/35x7
22,00	35,00	8,00	x									CB 22/35x8
22,00	35,00	10,00		x								CC 22/35x10
22,00	40,00	8/11,5	x	x								X 22/40x8/11,5
22,00	40,00	7,00	x	x								X 22/40x7
22,00	40,00	8,00										CB 22/40x8
22,00	42,00	10,00	x		x							X 22/42x10
22,00	45,00	7,00	x									CB 22/45x7
22,00	47,00	7,00	x	x								X 22/47x7
22,00	47,00	10,00	x									CB 22/47x10
22,00	62,00	7,00	x									CB 22/62x7
22,20	34,90	6,35	x									CB 2,2/34,9x6,35
22,23	38,10	6,35	x									CB 22,23/38,1x6,35
22,70	47,00	7,00										CB 22,7/47x7
23,00	30,00	4,00									x	DINA 23/30x4
23,00	47,00	10,00		x								CC 23/47x10
23,70	45,00	8,00	x					x				X 23,7/45x8
23,81	36,51	6,35	x									CB 23,8/36,51x6,35
24,00	35,00	7,00	x					x				X 24/35x7
24,00	36,00	7,00	x	x								X 24/36x7
24,00	37,00	7,00										CB 24/37x7
24,00	40,00	7,00	x	x						x		X 24/40x7
24,00	40,00	8,00	x	x								CC 24/40x8
24,00	40,00	10,00	x									CB 24/40x10

Radial Lip seal

Ø d h11	Ø D H8	E +0,3	CB	CC	DB	DC	BB	BC	CC-P	DINA	Part N°.
24,00	42,00	8,00	x								CB 24/42x8
24,00	45,00	7,00		x							CC 24/45x7
24,00	47,00	7,00	x								CB 24/47x7
24,00	48,00	10,00	x								CB 24/48x10
24,00	50,00	10,00	x								CB 24/50x10
24,00	52,00	10,00	x								CB 24/52x10
24,50	33,00	5,00	x								CB 24/33x5
24,50	40,00	8,50	x								CB 24,5/40x8,5
24,90	45,00	6,50	x								CB 24,9/45x6,5
25,00	32,00	5,00					x				BB 25/32x5
25,00	32,00	6,00	x								CB 25/32x6
25,00	33,00	4,00	x								CB 25/33x4
25,00	35,00	6/6,5							x		CC-P 25/35x6/6,5
25,00	35,00	4,00								x	DINA 25/35x4
25,00	35,00	5,00	x								CB 25/35x5
25,00	35,00	6,00	x						x		X 25/35x6
25,00	35,00	7,00	x	x							X 25/35x7
25,00	35,00	8,50	x								CB 25/35x8,5
25,00	37,00	5,00	x								CB 25/37x5
25,00	37,00	7,00	x	x							X 25/37x7
25,00	38,00	7,00	x	x							X 25/38x7
25,00	40,00	7,00	x	x							X 25/40x7
25,00	40,00	8,00	x	x							X 25/40x8
25,00	42,00	6,00	x								CB 25/42x6
25,00	42,00	7,00	x	x							X 25/42x7
25,00	42,00	8,50	x	x							X 25/42x8,5
25,00	42,00	10,00	x	x							X 25/42x10
25,00	43,00	9,00	x								CB 25/43x9
25,00	45,00	10,00	x								CB 25/45x10
25,00	46,00	7,00	x								CB 25/46x7
25,00	47,00	8/11,5		x							CC 25/47x8/11,5
25,00	47,00	7,00	x	x							X 25/47x7
25,00	47,00	8,00	x	x							X 25/47x8
25,00	47,00	8,70		x							CC 25/47x8,7
25,00	47,00	10,00	x	x	x						X 25/47x10
25,00	49,00	10/15		x							CC 25/49x10/15
25,00	50,00	10,00	x	x							X 25/50x10
25,00	52,00	5,00	x								CB 25/52x5
25,00	52,00	7,00	x	x							X 25/52x7
25,00	52,00	8,00	x	x							X 25/52x8
25,00	52,00	10,00	x	x	x						X 25/52x10
25,00	62,00	7,00		x							CC 25/62x7
25,00	62,00	10,00	x	x							X 25/62x7
25,40	35,00	7,00		x							CC 25,4/35x7
25,40	36,52	6,35						x			BC 25,4/36,52x6,35
25,40	38,18	6,50					x				BB 25,4/38,18x6,5
25,40	41,35	6,35						x			BC 25,4/41,35x6,35
25,40	44,45	9,53	x								CB 25,4/44,45x9,53
25,40	52,00	7,00		x							CC 25,4/52x7
25,70	35,00	7/9						x			BC 25,7/35x7/9
26,00	35,00	7,00	x	x			x				X 26/35x7
26,00	36,00	7,00	x	x							X 26/36x7
26,00	37,00	7/8		x							CC 26/37x7/8
26,00	37,00	7,00	x								CB 26/37x7
26,00	42,00	7,00	x								CB 26/42x7

Radial Lip seal

Ø d h11	Ø D H8	E +0,3	CB	CC	DB	DC	BB	BC	CC-P	DINA	Part N°.
26,00	47,00	7,00	x								CB 26/47x7
26,00	50,00	10,00	x								CB 26/50x10
26,00	50,00	12,00			x						DB 26/50x12
26,00	52,00	8,00	x								CB 26/52x8
26,00	52,00	10,00		x							CC 26/52x10
26,50	47,00	7,00	x								CB 26,5/47x7
27,00	37,00	7,00	x								CB 27/37x7
27,00	41,00	10,00	x								CB 27/41x10
27,00	47,00	10/12		x							CC 27/47x10/12
27,00	47,00	6,00	x								CB 27/47x6
27,00	47,00	7,00	x	x							X 27/47x7
27,00	51,00	10,00		x							CC 27/51x10
28,00	38,00	6,00	x								CB 28/38x6
28,00	38,00	7,00	x	x							X 28/38x7
28,00	40,00	8/8,5							x		CC-P 28/40x8/8,5
28,00	40,00	7,00	x	x					x		X 28/40x7
28,00	40,00	10,00	x								CB 28/40x10
28,00	42,00	7,00	x				x				X 28/42x7
28,00	42,00	10,00	x								CB 28/42x10
28,00	43,00	10,00	x								CB 28/43x10
28,00	47,00	7,00	x	x							X 28/47x7
28,00	47,00	8,00	x								CB 28/47x8
28,00	47,00	10,00	x								CB 28/47x10
28,00	50,00	10,00	x								CB 28/50x10
28,00	52,00	5,00	x								CB 28/52x5
28,00	52,00	6,00	x								CB 28/52x6
28,00	52,00	7,00	x								CB 28/52x7
28,00	52,00	10,00	x	x							X 28/52x10
28,00	57,00	12,00	x								CB 28/57x12
28,00	62,00	12,00	x								CB 28/62x12
28,45	38,10	6,35	x								CB 28,45/38,1x6,35
28,57	45,24	6,35		x							CC 28,57/45,24x6,35
28,58	38,10	6,35	x								CB 28,58/38,1x6,35
28,58	41,28	9,52		x							CC 28,58/41,28x9,52
29,00	40,00	7,00	x								CB 29/40x7
29,00	45,00	9,50	x								CB 29/45x9,5
30,00	38,00	5,00					x				BB 30/38x5
30,00	40,00	5,00	x								CB 30/40x5
30,00	40,00	7,00	x	x			x				X 30/40x7
30,00	42,00	6,00		x							CC 30/42x6
30,00	42,00	7,00	x	x					x		X 30/42x7
30,00	42,00	8,00		x							CC 30/42x8
30,00	43,00	8,00					x				BB 30/43x8
30,00	44,00	10,00	x	x							X 30/44x10
30,00	45,00	5,00	x								CB 30/45x5
30,00	45,00	8,00	x								CB 30/45x8
30,00	47,00	5,00	x								CB 30/47x5
30,00	47,00	6,00	x								CB 30/47x6
30,00	47,00	7,00	x	x					x		X 30/47x7
30,00	47,00	8,00	x	x							X 30/47x8
30,00	47,00	10,00	x	x							X 30/47x10
30,00	48,00	8,00	x								CB 30/48x8
30,00	50,00	5,00	x								CB 30/50x5
30,00	50,00	7,00	x						x		X 30/50x7

Radial Lip seal

Ø d h11	Ø D H8	E +0,3	CB	CC	DB	DC	BB	BC	CC-P	DINA	Part N°.
30,00	50,00	8,00	x	x							X 30/50x8
30,00	50,00	10,00	x	x	x						X 30/50x10
30,00	50,00	12,00			x						DB 30/50x12
30,00	52,00	10/12		x							CC 30/52x10/12
30,00	52,00	4,00	x								CB 30/52x4
30,00	52,00	7,00	x	x				x			X 30/52x7
30,00	52,00	10,00	x	x							X 30/52x10
30,00	53,50	12/17,5		x							CC 30/53,5x12/17,5
30,00	53,50	10/14		x							CC 30/53,5x10/14
30,00	55,00	7/9							x		CC-P 30/55x7/9
30,00	55,00	7,00	x								CB 30/55x7
30,00	55,00	10,00	x	x							X 30/55x10
30,00	55,00	12,00					x				BB 30/55x12
30,00	56,00	10,00	x								CB 30/56x10
30,00	56,00	12,00			x						DB 30/56x12
30,00	60,00	10,00	x								CB 30/60x10
30,00	62,00	7,00	x	x							X 30/62x7
30,00	62,00	10,00	x	x	x						X 30/62x10
30,00	68,00	7,00	x								CB 30/68x7
30,00	72,00	10,00	x								CB 30/72x10
30,00	43,64	13,90						x			BC 30/43,64x13,9
30,20	50,70	6,35	x								CB 30,2/50,7x6,35
31,00	47,00	7,00	x								CB 31/47x7
31,00	52,00	7,00	x	x							X 31/52x7
31,00	62,00	4/5	x								CB 31/62x4/5
31,50	47,00	7,00	x								CB 31/47x7
31,75	40,00	7,00		x							CC 31,75/40x7
31,75	41,27	6,35		x							CC 31,75/41x27x6,35
31,75	44,60	6,35	x								CB 31,75/47,75x6,35
31,75	47,75	9,6/10,7	x								CB 31,75/47,75x9,6/10,7
31,75	62,00	7,00		x							CC 31,75/62x7
32,00	42,00	7,00	x	x							X 32/42x7
32,00	45,00	7,00	x	x							X 32/45x7
32,00	47,00	7,00	x				x	x			X 32/47x7
32,00	47,00	8,00	x								CB 32/47x8
32,00	48,00	7,00		x							CC 32/48x7
32,00	50,00	8,00	x		x						X 32/50x8
32,00	50,00	10,00	x								CB 32/50x10
32,00	52,00	10/12		x							CC 32/52x10/12
32,00	52,00	5,00	x								CB 32/52x5
32,00	52,00	7,00	x	x			x				X 32/52x7
32,00	52,00	7,50	x								CB 32/52x7,5
32,00	52,00	10,00	x								CB 32/52x10
32,00	52,00	12,00	x								CB 32/52x12
32,00	56,00	10,00	x								CB 32/56x10
32,00	62,00	6/7	x								CB 32/62x6/7
32,00	62,00	10,00	x	x							X 32/62x10
32,00	70,00	8,00	x								CB 32/70x8
33,00	45,00	10,00		x							CC 33/45x10
33,00	47,00	11,00	x								CB 33/47x11
33,00	50,00	6,00		x							CC 33/50x6
33,00	50,00	10,00		x							CC 33/50x10
33,00	52,00	6,00	x								CB 33/52x6
33,00	72,00	12,00			x						DB 33/72x12
33,50	50,00	6,00		x							CC 33,5/50x6
34,00	46,00	10,00	x								CB 34/46x10

Radial Lip seal

Ø d h11	Ø D H8	E +0,3	CB	CC	DB	DC	BB	BC	CC-P	DINA	Part N°.
34,00	50,00	10.00	x								CB 340-02-100
34,00	52,00	10/12		x							CC 340-03-100
34,00	52,00	8,00	x								CB 340-04-100
34,00	52,00	10,00	x								CB 340-05-100
34,00	62,00	10,00	x								CB 340-06-100
34,90	46,50	7,00					x				BB 349-01-100
34,90	50,80	11,10		x							CC 349-02-100
34,90	53,90	7,90	x								CB 349-03-100
34,90	60,30	12,70	x								CB 349-04-100
35,00	42,00	5,00					x				BB 350-02-100
35,00	45,00	6,00	x								CB 350-04-100
35.00	45,00	7,00	x	x							X 350-05-100
35,00	45,00	10,00	x								CB 350-06-100
35,00	47,00	4,50	x								CB 350-07-100
35,00	47,00	6,00	x								CB 350-08-100
35,00	47,00	7,00	x	x							X 350-09-100
35,00	47,00	10,00	x	x							X 350-10-100
35,00	50,00	7,00	x						x		X 350-11-100
35,00	50,00	8,00	x	x							X 350-12-100
35,00	50,00	10,00	x	x							X 35/50x10
35,00	52,00	6,00		x					x		X 350-14-100
35,00	52,00	7,00	x	x							X 350-15-100
35,00	52,00	8,00	x	x							X 350-16-100
35,00	52,00	10,00	x	x							X 350-17-100
35,00	53,00	8,00	x								CB 350-19-100
35,00	55,00	8,00	x								CB 350-20-100
35,00	55,00	9,00		x							CC 350-21-100
35,00	55,00	10,00	x								CB 350-22-100
35,00	55,00	10,00		x							CC 350-23-100
35,00	55,50	9,00	x								CB 350-24-100
35,00	56,00	10,00	x	x							X 350-25-100
35,00	58,00	10,00	x	x							X 350-26-100
35,00	60,00	10,00	x	x							X 350-27-100
35,00	62,00	7,00	x	x					x		X 350-28-100
35,00	62,00	8,00	x	x							X 350-29-100
35,00	62,00	10,00	x	x							X 350-30-100
35,00	62,00	12,00		x							CC 350-31-100
35,00	65,00	10,00	x								CB 350-32-100
35,00	67,00	7,00	x								CB 350-33-100
35,00	68,00	10,00	x	x							X 350-34-100
35,00	70,00	10,00	x								CB 350-35-100
35,00	72,00	7,00		x							CC 350-36-100
35,00	72,00	10,00	x	x							X 350-37-100
35,00	72,00	12,00	x	x	x						X 350-38-100
35,00	80,00	10,00	x	x							X 350-39-100
35,00	80,00	12,00	x								CB 350-40-100
35.20	57,30	12,70			x						DB 352-01-100
36,00	45,00	6,00	x								CB 360-01-100
36,00	47,00	7,00	x	x							X 360-02-100
36,00	50,00	7,00	x								CB 360-03-100
36,00	50,00	10,00	x								CB 360-04-100
36,00	52,00	7,00	x								CB 360-05-100
36,00	52,00	10,00		x							CC 360-06-100
36,00	54,00	7,50	x								CB 360-07-100
36,00	58,00	10,00	x								CB 360-08-100
36.00	62,00	7,00	x								CB 360-09-100
36,00	63,00	12,00				x					DC 360-10-100

Radial Lip seal

Ø d h11	Ø D H8	E +0,3	CB	CC	DB	DC	BB	BC	CC-P	DINA	Part N°.
36,00	68,00	10,00	x								CB 36/68x10
36,51	52,58	7,93		x							CC 36,51/52,58x7,93
38,00	50,00	7,00	x								CB 38/50x7
38,00	52,00	7,00	x	x							X 38/52x7
38,00	52,00	10,00					x				BB 38/52x10
38,00	54,00	5,00	x								CB 38/54x5
38,00	54,00	10,00	x	x							X 38/54x10
38,00	55,00	7,00	x								CB 38/55x7
38,00	55,00	10,00	x	x							X 38/55x10
38,00	56,00	10,00	x								CB 38/56x10
38,00	62,00	7,00	x	x					x		X 38/62x7
38,00	62,00	10,00	x								CB 38/62x10
38,00	72,00	10,00	x	x							X 38/72x10
38,10	50,29	12,70	x								CB 38,1/50,29x12,7
38,10	60,32	9,52		x							CC 38,1/60,32x9,52
40,00	50,00	7,00		x							CC 40/50x7
40,00	52,00	5,00							x		CC-P 40/52x5
40,00	52,00	7,00	x	x							X 40/52x7
40,00	52,00	10,00		x							CC 40/52x10
40,00	54,00	7,00	x								CB 40/54x7
40,00	55,00	7,00	x	x					x		X 40/55x7
40,00	55,00	8,00	x	x							X 40/55x8
40,00	55,00	10,00	x								CB 40/55x10
40,00	56,00	6,00							x		CC-P 40/56x6
40,00	56,00	8,00	x	x							X 40/56x8
40,00	56,00	8,50								x	DINA 40/56x8,5
40,00	56,00	10,00	x								CB 40/56x10
40,00	58,00	10,00	x	x							X 40/58x10
40,00	60,00	7,00	x								CB 40/60x7
40,00	60,00	10,00	x	x					x		X 40/60x10
40,00	62,00	6,00							x		CC-P 40/62x6
40,00	62,00	7,00	x	x							X 40/62x7
40,00	62,00	10,00	x	x		x		x			X 40/62x10
40,00	63,00	10,00	x								CB 40/63x10
40,00	63,50	12,50			x						DB 40/63,5x12,5
40,00	65,00	10,00	x								CB 40/65x10
40,00	65,00	12,00	x								CB 40/65x12
40,00	68,00	8,00	x								CB 40/68x8
40,00	68,00	10,00	x	x							X 40/68x10
40,00	70,00	10,00	x								CB 40/70x10
40,00	72,00	7,00	x	x							X 40/72x7
40,00	72,00	10,00	x								CB 40/72x10
40,00	80,00	7,00		x							CC 40/80x7
40,00	80,00	10,00	x	x							X 40/80x10
40,00	82,57	13,00			x						DB 40/82,57x13
40,00	90,00	9,00			x						DB 40/90x9
40,00	90,00	10,00	x								CB 40/90x10
40,00	90,00	12,00	x	x							X 40/90x12
40,00	95,00	10,00			x						DB 40/95x10
40,08	50,85	4,10	x								CB 401-01-100
41,27	66,67	9,52	x								CB 41,27/66,67x9,52
41,27	60,33	9,52		x							CC 41,27/60,33x9,52
42,00	52,00	8,00		x							CC 42/52x8
42,00	55,00	7,00	x	x							X 42/55x7

Radial Lip seal

Ø d h11	Ø D H8	E +0,3	CB	CC	DB	DC	BB	BC	CC-P	DINA	Part N°.
42.00	55.00	8.00	x								CB 42/55x8
42.00	55.00	10.00		x							CC 42/55x10
42.00	56.00	7.00	x	x							X 42/56x7
42.00	58.00	10.00	x								CB 42/58x10
42.00	60.00	12.00	x								CB 42/60x12
42.00	62.00	7/7,5							x		CC-P 42/62x7/7,5
42.00	62.00	7.00	x	x							X 42/62x7
42.00	62.00	8.00	x	x							X 42/62x8
42.00	62.00	10.00	x	x							X 42/62x10
42.00	65.00	8.00			x						DB 42/65x8
42.00	65.00	10.00	x								CB 42/65x10
42.00	72.00	8.00	x								CB 42/72x8
42.00	72.00	10.00	x								CB 42/72x10
42.00	72.00	12.00			x						DB 42/72x12
43.00	54.00	9.00		x							CC 43/54x9
43.00	55.00	9.00		x							CC 43/55x9
43.00	55.00	10.00		x							CC 43/55x10
43.00	60.00	10.00	x								CB 43/60x10
44.00	62.00	10.00		x							CC 44/62x10
44.00	72.00	12.00	x								CB 44/72x12
44.40	68.26	15/19	x								CB 44,4/68,26x15/19
44.50	63.65	9.50					x				BB 44,5/63,65x9,5
45.00	55.00	6.00	x								CB 45/55x6
45.00	55.00	7.00	x								CB 45/55x7
45.00	56.00	7.00	x								CB 45/56x7
45.00	57.00	10.00		x							CC 45/57x10
45.00	58.00	7.00		x							CC 45/58x7
45.00	60.00	10/13		x							CC 45/60x10/13
45.00	60.00	7/8		x							CC 45/60x7/8
45.00	60.00	7.00	x	x							X 45/60x7
45.00	60.00	8.00	x	x							X 45/60x8
45.00	60.00	10.00	x								CB 45/60x10
45.00	62.00	7.00	x						x		X 45/62x7
45.00	62.00	8.00	x							x	X 45/62x8
45.00	62.00	10.00	x	x	x						X 45/62x10
45.00	62.00	12.00	x								CB 45/62x12
45.00	64.00	12.00			x						DB 45/64x12
45.00	65.00	10/12		x							CC 45/65x10/12
45.00	65.00	7.00							x		CC-P 45/65x7
45.00	65.00	8.00	x	x					x		X 45/65x8
45.00	65.00	10.00	x	x	x			x			X 45/65x10
45.00	66.00	6.00	x								CB 45/66x6
45.00	66.00	10.00	x								CB 45/66x10
45.00	68.00	10.00	x								CB 45/68x10
45.00	70.00	10.00	x								CB 45/70x10
45.00	72.00	7.00	x								CB 45/72x7
45.00	72.00	8.00	x	x							X 45/72x8
45.00	72.00	10.00	x								CB 45/72x10
45.00	73.00	12.00	x								CB 45/73x12
45.00	75.00	8.00	x	x							X 45/75x8
45.00	75.00	10.00	x	x							X 45/75x10
45.00	80.00	7.00		x							CC 45/80x7
45.00	80.00	10.00	x	x							X 45/80x10
45.00	80.00	13.00	x								CB 45/80x13
45.00	85.00	10.00	x	x							X 45/85x10

Radial Lip seal

Ø d h11	Ø D H8	E +0,3	CB	CC	DB	DC	BB	BC	CC-P	DINA	Part N°.
45.00	90.00	8.00	x								CB 45/90x8
45.00	90.00	10.00	x	x	x						X 45/90x10
45.00	100.00	10.00	x								CB 45/100x10
46.00	64.00	8.00	x								CB 46/64x8
46.00	64.00	14.00		x							CC 46/64x14
46.00	65.00	10.00	x								CB 46/65x10
46.80	61.30	4.00	x								CB 46,8/61,3x4
47.00	58.00	6.00	x								CB 47/58x6
47.00	65.00	10.00							x		CC-P 47/65x10
47.00	67.00	10.00		x							CC 47/67x10
47.00	70.00	10.00	x								CB 47/70x10
47.00	75.00	12.00			x						DB 47/75x12
47.00	77.00	8.00	x								CB 47/77x8
48.00	62.00	8.00	x	x							X 48/62x8
48.00	65.00	10.00	x	x			x				X 48/65x10
48.00	67.00	10.00		x							CC 48/67x10
48.00	68.00	10.00		x							CC 48/68x10
48.00	68.00	12.00	x								CB 48/68x12
48.00	68.00	14.00		x							CC 48/68x14
48.00	72.00	8.00	x								CB 48/72x8
48.00	72.00	10.00	x								CB 48/72x10
48.00	72.00	15.00									
48.00	80.00	10.00	x								CB 48/80x10
49.00	65.00	10.00	x								CB 49/65x10
49.20	79.38	9.65			x						DB 49,2/79,38x9,65
49.50	60.00	8.00	x								CB 49,5/60x8
50.00	58.00	5.00					x				BB 50/58x5
50.00	62.00	5.00									X 50/62x5
50.00	65.00	8.00	x	x					x		CB 50/65x8
50.00	65.00	10.00	x								X 50/65x10
50.00	68.00	8.00	x	x					x		DINA 50/68x8
50.00	68.00	8.50								x	X 50/68x8,5
50.00	68.00	10.00	x	x							CB50/68x10
50.00	70.00	8.00	x								X 50/70x8
50.00	70.00	10.00	x	x	x						CB 50/70x10
50.00	70.00	12.00	x								X 50/70x12
50.00	72.00	8/10		x					x		CB 50/72x8/10
50.00	72.00	6.00	x								CC-P 50/72x6
50.00	72.00	7.00							x		X 50/72x7
50.00	72.00	8.00	x	x							X 50/72x8
50.00	72.00	10.00	x	x							X 50/72x10
50.00	72.00	12.00	x	x							CB 50/72x12
50.00	75.00	10.00	x								CC 50/75x10
50.00	75.00	12.00		x							X 50/75x12
50.00	80.00	8.00	x	x							X 50/80x8
50.00	80.00	10.00	x	x	x						X 50/80x10
50.00	80.00	13.00	x	x							CB 50/80x13
50.00	85.00	10.00	x								X 50/85x10
50.00	90.00	10.00	x	x							DB 50/90x10
50.00	90.00	13.00			x						DB 50/90x13
50.00	95.00	10.00			x						CB 50/95x10
50.00	110.00	12.00	x								DC 50/110x12
50.40	76.20	12.70				x					DB 50,4/76,2x12,7
50.80	69.85	12.70			x						BC 50,8/69,85x12,7
50.80	69.93	12.70						x			DB 50.8/69,93x12,7
50.80	76.20	12.70			x						DB 50,8/76,2x12,7

Radial Lip seal

Ø d h11	Ø D H8	E +0,3	CB	CC	DB	DC	BB	BC	CC-P	DINA	Part N°.
50,80	76,30	9,50	x								CB 50,8/76,3x9,5
51,60	67,85	9,50	x								CB 51,6/67,85x9,5
52,00	68,00	8.00	x								CB 52/68x8
52,00	70,00	7.00	x								CB 52/70x7
52,00	72,00	8.00	x								CB 52/72x8
52,00	73,30	10,60	x								CB 52/73,3x10,6
52,00	75,00	12.00	x								CB 52/75x12
52,00	76,00	13.00	x								CB 52/76x13
52,00	80,00	10.00	x	x							X 52/80x10
52,00	80,00	13.00			x						DB 52/80x13
52,00	85,00	10.00	x	x							X 52/85x10
52,00	87,00	8.00	x								CB 52/87x8
52,38	80,96	11,43	x								CB 52,4/80,96x11,43
53,00	79,00	10.00	x								CB 53/79x10
53,00	80,00	10.00	x								CB 53/80x10
53,97	72,93	12,70		x							CC 53,9/72,93x12,7
54,00	72,00	10.00		x							CC 54/72x10
54,00	80,00	10.00			x						DB 54/80x10
54,00	85,00	10.00	x	x							X 54/85x10
54,00	90,00	13.00	x								CB 54/90x13
54,80	70,00	9/9,5							×		CC-P 54,8/70x9/9,5
54,86	82,57	12.70	x								CB 54,86/82,57x12,7
55,00	63,00	5.00									
55,00	68,00	8.00	x								CB 55/68x8
55,00	70,00	8.00	x						×		X 55/70x8
55,00	70,00	10.00	x	x							X 55/70x10
55,00	72,00	8.00	x	x							X 55/72x8
55,00	72,00	10.00	x	x							X 55/72x10
55,00	75,00	8.00	x								CB 55/75x8
55,00	75,00	9.00	x								CB 55/75x9
55,00	75,00	10.00	x	x							X 55/75x10
55,00	75,00	12.00	x								CB 55/75x12
55,00	78,00	10.00	x								CB 55/78x10
55,00	80,00	5.00	x								CB 55/80x5
55,00	80,00	6.00	x								CB 55/80x6
55,00	80,00	8.00	x	x	x						X 55/80x8
55,00	80,00	10.00	x	x		x					X 55/80x10
55,00	80,00	13.00			x						DB 55/80x13
55,00	85,00	8.00	x								CB 55/85x8
55,00	85,00	10.00	x	x							X 55/85x10
55,00	85,00	14.00		x							CC 55/85x14
55,00	90,00	8.00	x	x							X 55/90x8
55,00	90,00	10.00	x	x							X 55/90x10
55,00	100,00	10.00		x							CC 55/100x10
55,00	100,00	12.00	x								CB 55/100x12
55,00	100,00	13.00	x								CB 55/100x13
56,00	70,00	8.00	x								CB 56/70x8
56,00	72,00	8.00	x								CB 56/72x8
56,00	80,00	8.00	x								CB 56/80x8
56,00	85,00	8.00	x								CB 56/85x8
56,00	90,00	10.00		x							CC 56/90x10
57,00	85,00	13.00	x								CB 57/85x13
57,10	76,20	12.70						x			BC 57,1/76,2x12,7
57,94	84,93	7.93	x								CB 57,94/84,93x7,93
58,00	72,00	8.00	x								CB 58/72x8
58,00	72,00	10.00	x	x							X 58/72x10
58,00	75,00	12.00			x						DB 58/75x12
58,00	80,00	8.00	x								CB 58/80x8
58,00	80,00	9.00		x							CC 58/80x9

Radial Lip seal

Ø d h11	Ø D H8	E +0,3	CB	CC	DB	DC	BB	BC	CC-P	DINA	Part N°.
58.00	80.00	10.00		x							CC 58/80x10
58.00	80.00	12.00	x								CB 58/80x12
58.00	85.00	10.00	x								CB 58/85x10
58.00	90.00	10.00	x								CB 58/90x10
58.00	90.00	13.00			x						DB 58/90x13
60.00	70.00	7.00	x								CB 60/70x7
60.00	70.00	10.00								x	DINA 60/70x10
60.00	75.00	7/7,5							x		CC-P 60/75x7/7,5
60.00	75.00	8.00	x	x	x				x		X 60/75x8
60.00	80.00	7.00		x					x		X 60/80x7
60.00	80.00	8.00	x	x	x	x					X 60/80x8
60.00	80.00	10.00	x	x				x			X 60/80x10
60.00	80.00	12.00	x		x						X 60/80x12
60.00	85.00	8.00	x								CB 60/85x8
60.00	85.00	10.00	x	x	x						X 60/85x10
60.00	85.00	13.00			x						DB 60/85x13
60.00	85.10	12.00			x						DB 60/85,1x12
60.00	90.00	7.00							x		CC-P 60/90x7
60.00	90.00	8.00	x	x							X 60/90x8
60.00	90.00	10.00	x	x							X 60/90x10
60.00	110.00	13.00	x		x						X 60/110x13
60.33	88.90	12.70		x							CC 60,33/88,9x12,7
62.00	70.00	10.00								x	DINA 62/70x10
62.00	80.00	12.00			x						DB 62/80x12
62.00	82.00	10.00			x						DB 62/82x10
62.00	85.00	7.00							x		CC-P 62/85x7
62.00	85.00	10.00	x								CB 62/85x10
62.00	90.00	10.00	x	x							X 62/90x10
62.00	100.00	12.00	x								CB 62/100x12
63.00	80.00	9.00		x							CC 63/80x9
63.00	85.00	10.00	x		x	x					X 63/85x10
63.00	90.00	10.00	x								CB 63/90x10
63.00	90.00	13.00			x						DB 63/90x13
63.50	85.72	6.35		x							CC 63,5/85,72x6,35
63.50	85.72	12.70				x					DC 63,5/85,72x12,7
64.00	80.00	8.00	x								CB 64/80x8
64.00	85.00	13.00			x						DB 64/80x13
65.00	75.00	8.00		x							CC 65/75x8
65.00	80.00	8.00	x								CB 65/80x8
65.00	80.00	10.00		x							CC 65/80x10
65.00	85.00	8.00	x								CB 65/85x8
65.00	85.00	10.00	x	x	x						X 65/85x10
65.00	90.00	10.00	x	x	x				x		X 65/90x10
65.00	90.00	12.00			x	x					X 65/90x12
65.00	95.00	10.00	x								CB 65/95x10
65.00	100.00	10.00		x		x		x			X 65/100x10
65.00	125.00	12.00	x								CB 65/125x12
65.09	88.90	12.70		x							CC 65,09/88,9x12,7
66.00	90.00	10.00			x						DB 66/90x10
68.00	90.00	10.00	x		x	x					X 68/90x10
68.00	95.00	13.00	x								CB 68/95x13
68.00	97.00	8.00	x								CB 68/97x8
68.00	100.00	10.00	x	x							X 68/100x10
68.00	100.00	12.00			x						DB 68/100x12
68.00	100.00	13.00	x								CB 68/100x13
68.00	110.00	13.00			x						DB 68/110x13
70.00	85.00	7.00	x								CB 70/85x7
70.00	85.00	8.00	x	x							X 70/85x8

Radial Lip seal

Ø d h11	Ø D H8	E +0,3	CB	CC	DB	DC	BB	BC	CC-P	DINA	Part N°.
70,00	85,00	10,00	x	x							X 70/85x10
70,00	90,00	7,00							x		CC-P 70/90x7
70,00	90,00	10,00	x	x	x	x			x		X 70/90x10
70,00	90,00	12,00	x								CB 70/90x12
70,00	90,00	13,00			x						DB 70/90x13
70,00	95,00	10,00	x								CB 70/95x10
70,00	95,00	12,00		x							CC 70/95x12
70,00	95,00	13,00	x			x					X 70/95x13
70,00	100,00	10,00	x	x	x				x		X 70/100x10
70,00	100,00	12,00	x								CB 70/100x12
70,00	105,00	10,00	x								CB 70/105x10
70,00	110,00	10,00	x	x							X 70/110x10
70,00	110,00	12,00	x	x							X 70/110x12
70,00	120,00	12,00	x								CB 70/120x12
70,00	120,00	13,00	x		x						X 70/120x13
70,00	150,00	12,00	x								CB 70/150x12
72,00	85,00	10,00	x								CB 72/85x10
72,00	90,00	10,00	x	x		x					X 72/90x10
72,00	95,00	10,00	x		x						X 72/95x10
72,00	95,00	12,00	x								CB 72/95x12
72,00	95,00	13,00			x						DB 72/95x13
72,00	100,00	10,00	x	x							X 72/100x10
72,00	101,60	12,50	x								CB 72/101,6x12,5
72,00	110,00	12,00	x								CB 72/110x12
72,00	130,00	12,00	x								CB 72/130x12
75,00	90,00	8,00	x	x							X 75/90x8
75,00	90,00	10,00	x	x					x		X 75/90x10
75,00	90,00	12,00	x								CB 75/90x12
75,00	95,00	9,00		x							CC 75/95x9
75,00	95,00	10,00	x	x					x		X 75/95x10
75,00	95,00	12,00	x								CB 75/95x12
75,00	100,00	10,00	x	x	x						X 75/100x10
75,00	100,00	13,00				x					DC 75/100x13
75,00	105,00	12,00	x			x					X 75/105x12
75,00	107,00	10,00	x								CB 75/107x10
75,00	110,00	12,00	x	x							X 75/110x12
75,00	115,00	13,00				x					DC 75/115x13
75,00	120,00	12,00	x								CB 75/120x12
75,00	130,00	13,00	x								CB 75/130x13
76,00	100,00	16,00		x							CC 76/100x16
76,20	98,43	11,11			x						DB 76,2/98,43x11,11
78,00	90,00	8,00	x								CB 78/90x8
78,00	95,00	13,00			x						DB 78/95x13
78,00	95,50	12,70	x								CB 78/95,5x12,7
78,00	100,00	10,00	x	x							X 78/100x10
78,00	110,00	12,00	x								CB 78/110x12
80,00	90,00	5,00								x	DINA 80/90x5
80,00	90,00	6,00								x	DINA 80/90x6
80,00	90,00	12,00								x	DINA 80/90x12
80,00	95,00	5,00					x				BB 80/95x5
80,00	95,00	8,00	x								CB 80/95x8
80,00	100,00	7,00							x		CC-P 80/100x7
80,00	100,00	10,00	x	x	x	x					X 80/100x10
80,00	100,00	13,00	x	x	x						X 80/100x13
80,00	105,00	10,00	x								CB 80/105x10
80,00	105,00	13,00	x								CB 80/105x13
80,00	108,00	10,00				x					DC 80/108x10
80,00	110,00	10,00	x	x							X 80/110x10

Radial Lip seal

Ø d h11	Ø D H8	E +0,3	CB	CC	DB	DC	BB	BC	CC-P	DINA	Part N°.
80,00	110,00	12,00	x	x							X 80/110x12
80,00	110,00	13,00				x					DC 80/110x13
80,00	110,00	14,00			x						DB 80/110x14
80,00	120,00	13,00	x								CB 80/120x13
80,00	125,00	10,00		x							CC 80/125x10
80,00	125,00	12,00	x	x							X 80/125x12
80,00	150,50	13,00	x								CB 80/150,5x13
82,00	105,00	10/12		x							CC 82/105x10/12
82,00	105,00	12,00	x	x							X 82/105x12
82,00	105,00	13,00			x						DB 82/105x13
82,00	110,00	12,00	x								CB 82/110x12
83,50	105,00	13,00			x						DB 83,5/105x13
84,00	105,00	13,00			x						DB 84/105x13
84,00	110,00	12,00			x						DB 84/110x12
85,00	100,00	9,00	x								CB 85/100x9
85,00	102,00	13,00	x								CB 85/102x13
85,00	105,00	12,00					x		x		X 85/105x12
85,00	105,00	13,00	x								CB 85/105x13
85,00	110,00	12,00	x	x		x					X 85/110x12
85,00	110,00	13,00	x	x	x						X 85/110x13
85,00	110,00	15,00			x						DB 85/110x15
85,00	115,00	15,00	x								CB 85/115x15
85,00	120,00	7,50							x		CC-P 85/120x7,5
85,00	120,00	12,00	x	x	x						X 85/120x12
85,00	120,00	13,00	x	x							X 85/120x13
85,00	120,00	15,00			x						DB 85/120x15
85,00	125,00	13,00			x						DB 85/125x13
85,00	130,00	12,00	x	x							X 85/130x12
85,00	140,00	12,00	x	x							X 85/140x12
87,00	110,00	10,00			x	x					X 87/110x10
88,00	105,00	12,00	x								CB 88/105x12
88,00	110,00	12,00	x								CB 88/110x12
88,00	113,00	8,00	x								CB 88/113x8
88,00	120,00	10,00			x						DB 80/120x10
88,00	120,00	13,00			x						DB 88/120x13
88,00	140,00	12,00	x								CB 88/140x12
88,00	150,00	13,00	x								CB 88/150x13
88,80	114,28	12,70		x							CC 88,8/114,28x12,7
88,90	114,30	11,90			x						DB 88,9/114,3x11,9
88,90	120,70	10,00			x						DB 88,9/120,7x10
88,90	127,00	12,70	x								CB 88,9/127x12,7
89,00	120,00	13,00			x						DB 89/120x13
89,70	105,00	6,00	x								CB 89,7/105x6
90,00	105,00	10,00	x								CB 90/105x10
90,00	110,00	7,50		x							CC 90/110x7,5
90,00	110,00	8,00	x		x						X 90/110x8
90,00	110,00	10,00	x								CB 90/110x10
90,00	110,00	12,00	x	x					x		X 90/110x12
90,00	110,00	13,00	x		x						X 90/110x13
90,00	115,00	9,00	x								BC 90/115x9
90,00	115,00	13,00	x		x						X 90/115x13
90,00	118,00	12,00				x					DC 90/118x12
90,00	120,00	12,00	x		x						X 90/120x12
90,00	120,00	13,00	x	x							X 90/120x13
90,00	120,00	15,00			x	x					X 90/120x15
90,00	125,00	12,00							x		CC-P 90/125x12
90,00	130,00	12,00	x	x							X 90/130x12
90,00	130,00	13,00	x			x					X 90/130x13
90,00	160,00	12,00	x								CB 90/160x12
92,00	120,00	10,00				x					DC 92/120x10

Radial Lip seal

Ø d h11	Ø D H8	E +0,3	CB	CC	DB	DC	BB	BC	CC-P	DINA	Part N°.
92,00	120,00	13,00	x	x	x						X 92/120x13
92,08	111,13	11,10		x							CC 92,08/111,13x11,1
92,20	126,70	11,60			x						DB 92,2/126,7x11,6
93,00	130,20	10,00			x						DB 93/130,2x10
95,00	110,00	10,00	x								CB 95/110x10
95,00	110,00	12,00	x								CB 95/110x12
95,00	115,00	9,00			x						DB 95/115x9
95,00	115,00	10,00			x						DB 95/115x10
95,00	115,00	13,00			x						DB 95/115x13
95,00	120,00	8,00		x							CC 95/120x8
95,00	120,00	12,00	x	x	x						X 95/120x12
95,00	120,00	13,00	x			x					X 95/120x13
95,00	120,00	15,00			x						DB 95/120x15
95,00	125,00	10,00		x							CC 95/125x10
95,00	125,00	12,00	x	x		x					X 95/125x12
95,00	130,00	13,00		x							CC 95/130x13
95,00	133,00	14,00			x						DB 95/133x14
95,25	127,00	11,00			x						DB 95,25/127x11
96,00	112,00	10,00	x								CB 96/112x10
98,00	120,00	12,00			x						DB 98/120x12
98,00	125,00	10,00	x								CB 98/125x10
98,00	125,00	13,00			x						DB 98/125x13
98,40	125,00	13,00			x						DB 98,4/125x13
100,00	115,00	9,00		x							CC 100/125x9
100,00	120,00	10,00					x				BB 100/120x10
100,00	120,00	12,00	x	x	x						X 100/120x12
100,00	120,00	13,00	x								CB 100/120x13
100,00	125,00	12,00	x								CB 100/125x12
100,00	125,00	13,00				x					DC 100/125x13
100,00	130,00	12,00	x	x							X 100/130x12
100,00	130,00	13,00	x		x						X 1000-09-100
100,00	130,00	14,00	x								CB 100/130x13
100,00	136,53	12,70			x						DB 100/136,53x12,7
100,00	140,00	13,00	x								CB 100/140x13
100,00	150,00	13,00		x							CC 100/150x13
100,00	160,00	12,00	x								CB 100/160x12
100,00	160,00	15,00			x						DB 100/160x15
100,00	180,00	13,00	x								CB 100/180x13
101,60	127,00	12,70			x						DB 101,6/127x12,7
101,60	127,10	12,70				x					DC 101,6/127,1x12,7
101,60	136,68	11,13			x						DB 101,6/136,8x11,13
101,60	139,70	12,70				x					DC 101,6/139,7x12,7
101,60	139,70	14,29			x						DB 101,6/139,7x14,29
101,60	146,05	14,28			x						DB 101,6/146,05x14,28
102,00	115,00	10,00		x							CC 102/115x10
102,00	125,00	13,00			x						DB 102/125x13
102,00	130,00	13,00			x						DB 102/130x13
104,00	130,00	10,00	x								CB 104/130x10
105,00	125,00	13,00	x	x							X 105/125x13
105,00	130,00	12,00	x	x							X 105/130x12
105,00	130,00	13,00		x	x						X 105/130x13
105,00	130,00	15,00	x		x						X 105/130x15
105,00	135,00	15,00		x							CC 105/135x15
105,00	140,00	12,00	x								CB 105/140x12
105,00	150,00	15,00	x						x		X 105/150x15
105,00	150,00	15,00			x						DB 105/150x15
105,00	160,00	12,00	x								CB 105/160x12
106,40	130,00	10,00			x						DB 106,4/130x10
107,95	136,45	12,70	x								CB 107,95/136,45x12,7

Radial Lip seal

Ø d h11	Ø D H8	E +0,3	CB	CC	DB	DC	BB	BC	CC-P	DINA	Part N°.
108,00	130,00	13,00			x						DB 108/130x13
108,00	133,40	13,00			x						DB 108/133,4x13
108,00	140,00	13,00			x						DB 108/140x13
110,00	130,00	8,00	x								CB 110/130x8
110,00	130,00	12,00	x	x	x				x		X 110/130x12
110,00	130,00	13,00	x								CB 110/130x13
110,00	130,00	14,50	x								CB 110/130x14,5
110,00	135,00	12,00	x								CB 110/135x12
110,00	140,00	10,00	x								CB 110/140x10
110,00	140,00	12,00	x	x	x						X 110/140x12
110,00	140,00	13,00	x								CB 110/140x13
110,00	140,00	13,00			x	x					X 110/140x13
110,00	140,00	15,00			x						DB 110/140x15
110,00	150,00	13,00			x						DB 110/150x13
110,00	150,00	15,00			x						DB 110/150x15
110,00	152,00	15,00			x						DB 110/152x15
112,00	140,00	13,00			x						DB 112/140x13
112,00	200,00	10,00			x						DB 112/200x10
113,00	140,00	13,00			x						DB 113/140x13
114,30	139,70	12,70			x						DB 114,3/139,7x12,7
115,00	140,00	10,00	x								CB 115/140x10
115,00	140,00	12,00	x	x							X 115/140x12
115,00	140,00	13,00	x	x	x						X 115/140x13
115,00	145,00	16,00				x					DC 115/145x16
115,00	150,00	12,00	x	x							X 115/150x12
115,00	150,00	13,00			x						DB 115/150x13
115,00	150,00	16,00			x						DB 115/150x16
118,00	150,00	12,00				x					DC 118150x12
119,00	140,00	15,00			x						DB 119/140x15
120,00	140,00	10,00			x						DB 120/140x10
120,00	140,00	13,00	x		x	x			x		X 120/140x13
120,00	150,00	10/12		x							CC 120/150x10/12
120,00	150,00	10,00	x								CB 120/150x10
120,00	150,00	12,00	x	x					x		X 120/150x12
120,00	150,00	13,00	x		x						X 120/150x13
120,00	150,00	15,00		x	x				x		X 120/150x15
120,00	152,00	16,00			x						DB 120/152x16
120,00	155,00	12,00	x								CB 120/155x12
120,00	155,00	16,00				x					DC 1200-10-100
120,00	160,00	12,00	x								CB 120/155x16
120,00	160,00	13,00	x		x						X 120/160x13
120,00	160,00	15,00	x								CB 120/200x15
120,00	200,00	15,00	x								CB 1200-14-100
122,00	150,00	12,00	x								CB 122/150x12
122,00	150,00	15,00			x						DB 122/150x15
124,00	150,00	15,00			x						DB 124/150x15
125,00	140,00	10,00	x								CB 125/140x10
125,00	143,00	13,00		x							CC 125/143x13
125,00	150,00	10,00				x					DC 125/150x10
125,00	150,00	12,00	x	x	x						X 125/150x12
125,00	150,00	13,00			x						DB 125/150x13
125,00	155,00	12,00	x	x							X 125/155x12
125,00	160,00	12,00	x								CB 12/160x12
125,00	160,00	15,00		x							CC 125/160x15
125,00	162,00	12,00				x					DC 125/162x12
125,00	162,00	15,00			x						DB 125/162x15
126,00	158,00	10,00	x								CB 126/158x10
127,00	152,40	12,70	x		x						X 127/152,4x12,7
128,00	146,00	13,50		x							CC 128/146x13,5

Radial Lip seal

Ø d h11	Ø D H8	E +0,3	CB	CC	DB	DC	BB	BC	CC-P	DINA	Part N°.
128,00	150,00	13,00	x								CB 128/150x13
128,00	150,00	15,00			x						DB 128/150x15
128,00	158,00	20,00	x								CB 128/158x20
128,00	160,00	13,00	x								CB 128/160x13
130,00	150,00	10,00	x								CB 130/150x10
130,00	150,00	12,00		x							CC 130/150x12
130,00	150,00	14,00			x						DB 130/150x14
130,00	150,00	15,00		x							CC 130/150x15
130,00	155,00	12,00			x						DB 13/155x12
130,00	160,00	12,00	x	x					x		X 130/160x12
130,00	160,00	13,00	x		x						X 130/160x13
130,00	160,00	14,00		x							CC 130/160x14
130,00	160,00	15,00	x	x	x	x					X 130/160x15
130,00	170,00	12,00	x	x							X 130/170x12
130,00	170,00	13,00	x								CB 130/170x13
130,00	170,00	15,00			x						DB 130/170x15
130,00	170,00	16,00			x						DB 130/170x16
132,50	155,60	13,00	x								CB 132,5/155,6x13
133,30	158,70	12,70	x								CB 133,3/58,7x12,7
134,50	155,50	9,52	x								CB 134,5/155,5x9,52
135,00	160,00	12,00	x								CB 135/160x12
135,00	160,00	13,00			x						DB 135/160x13
135,00	160,00	15,00	x	x							X 135/160x15
135,00	170,00	12,00	x								CB 135/170x12
135,00	170,00	15,00			x						DB 135/170x15
135,00	180,00	15,00	x								CB 135/180x15
138,00	160,00	15,00	x		x						X 138/160x15
139,70	165,10	12,70			x	x					X 139,7/165,1x12,7
139,70	171,60	15,87	x								CB 139,7/171,6x15,87
139,70	174,60	14,28			x						DB 139,7/174,6x14,28
140,00	160,00	12,00		x							CC 140/160x12
140,00	160,00	13,00				x					DC 140/160x13
140,00	165,00	12,00	x		x						X 140/165x12
140,00	165,00	12,50			x						DB 140/165x12,5
140,00	165,00	15,00	x	x							X 140/165x15
140,00	170,00	8,00	x	x							X 140/170x8
140,00	170,00	12,00	x	x	x	x					X 140/170x12
140,00	170,00	14,00		x							CC 140/170x14
140,00	170,00	15,00	x	x					x		X 140/170x15
140,00	180,00	12,00	x	x							X 140/180x12
140,00	180,00	13,00	x								CB 140/180x13
140,00	180,00	15,00	x								CB 140/180x15
140,00	190,00	15,00			x						DB 140/190x15
143,00	170,00	10,00			x						DB 143/170x10
144,00	160,00	12,00	x								CB 144/160x12
144,80	175,00	12,00			x						DB 144,8/175x12
145,00	165,00	15,00			x						DB 145/165x15
145,00	167,00	13,00		x							CC 145/137x13
145,00	170,00	10,00			x						DB 145/170x10
145,00	170,00	13,00			x						DB 145/170x13
145,00	170,00	15,00	x	x							X 145/170x15
145,00	180,00	12,00	x								CB 145/180x12
145,00	180,00	13,00	x								CB 145/180x13
145,00	180,00	14,00	x								CB 145/180x14
145,00	180,00	15,00	x		x	x					X 145/180x15
146,00	163,00	7,00	x								CB 146/163x7
146,00	170,00	15,00			x						DB 146/170x15
148,00	170,00	14,50	x								CB 148/170x14,5
149,00	170,00	14,50				x					DC 149/170x14,5
149,00	180,00	15,00			x						DB 149/180x15

Radial Lip seal

Ø d h11	Ø D H8	E +0,3	CB	CC	DB	DC	BB	BC	CC-P	DINA	Part N°.
150,00	168,00	12,00	x								CB 150/168x12
150,00	170,00	12,00	x								CB 150/170x12
150,00	170,00	15,00			x						DB 150/170x15
150,00	178,00	12,00		x							CC 150/178x12
150,00	180,00	8/8,5							x		CC-P 150/180x8/8,5
150,00	180,00	12,00	x								CB 150/180x12
150,00	180,00	13,00	x	x							X 150/180x13
150,00	180,00	14,00	x								CB 150/180x14
150,00	180,00	15,00	x	x	x	x					X 150/180x15
150,00	180,00	20,00		x							CC 150/180x20
150,00	195,00	15,00			x						DB 150/195x15
150,81	178,05	12,70	x								CB 150,81/178,05x12,7
152,00	190,00	15,00			x						DB 152/190x15
152,00	195,00	15,00			x						DB 152/195x15
152,40	182,56	19,05			x						DB 152,4/182,56x19,05
152,40	187,32	19,00		x							CC 152,4/187,32x19
152,40	190,70	15,00			x						DB 152,4/190,7x15
155,00	175,00	12,00	x								CB 155/175x12
155,00	180,00	15,00			x						DB 155/180x15
155,00	185,00	15,00		x							CC 155/185x15
155,00	193,90	15,50			x						DB 155/193,9x15,5
155,00	200,00	15,00			x						DB 155/200x15
157,00	190,50	16,00			x						DB 157/190,5x16
158,00	180,00	13,00	x								CB 158/180x13
158,80	190,00	12,00			x						DB 158,8/190x12
159,00	185,00	16,00			x						DB 159/185x16
160,00	180,00	10,00		x							CC 160/180x10
160,00	180,00	12,00		x							CC 160/180x12
160,00	180,00	15,00			x						DB 160/180x15
160,00	185,00	10,00	x								CB 1600-04-100
160,00	190,00	8,00							x		CC-P 160/190x8
160,00	190,00	13,00	x	x	x						X 160/190x13
160,00	190,00	15,00	x	x							X 160/190x15
160,00	190,00	15,00			x	x					X 160/190x15
160,00	200,00	12,00	x	x							X 160/200x12
160,00	200,00	14,00			x						DB 160/200x14
162,00	190,00	10,00			x						DB 162/190x10
162,00	190,00	12,00	x								CB 162/190x12
165,00	190,00	8,00		x							CC 165/190x8
165,00	190,00	13,00	x								CB 165/190x13
165,00	190,00	15,00				x					DC 165/190x15
165,00	200,00	15,00	x	x							X 165/200x15
165,10	190,50	14,29			x						DB 165,1/190,5x14,29
165,10	234,95	19,05				x					DC 165,1/234,95x19,05
165,20	203,30	19,05	x								CB 165,2/203,3x19,05
168,00	200,00	12,00			x						DB 168/200x12
168,00	200,00	15,00	x								CB 168/200x15
169,00	190,00	10,00			x						DB 169/190x10
170,00	190,00	15,00	x	x	x						X 170/190x15
170,00	200,00	12,00	x								CB 170/200x12
170,00	200,00	13,00			x						DB 170/200x13
170,00	200,00	15,00	x	x							X 170/200x15
170,00	200,00	16,00	x			x					DC 170/200x16
170,00	225,00	16,00			x						DB 170/225x16
170,00	245,00	16,00			x						DB 170/245x16
171,40	209,50	15,80			x						DB 171,4/209,5x15,8
175,00	200,00	10,00	x								CB 175/200x10
175,00	200,00	15,00	x	x	x						X 175/200x15
175,00	200,00	16,00	x								CB 175/200x16
175,00	210,00	14,00	x								CB 175/210x14

Radial Lip seal

Ø d h11	Ø D H8	E +0,3	CB	CC	DB	DC	BB	BC	CC-P	DINA	Part N°.
175,00	210,00	15,00			x	x					X 175/210x15
177,80	203,20	15,88			x						DB 177,8/203,2x15,88
177,80	222,25	19,05			x						DB 177,8/222,25x19,05
178,00	200,00	12,00			x						DB 178/200x12
180,00	200,00	13,00	x								CB 180/200x13
180,00	200,00	15,00	x		x						X 180/200x15
180,00	200,00	16,00		x							CC 180/200x16
180,00	210,00	15,00	x	x	x						X 1800/210x15
180,00	215,00	15,00	x	x	x	x					X 180/215x15
180,00	215,00	16,00	x	x							X 180/215x16
180,00	220,00	15,00	x			x					X 180/220x12
184,15	222,25	14,50	x								CB 184,15/222,25x14,5
185,00	210,00	13,00	x	x	x						X 185/210x13
185,00	210,00	15,00	x								CB 185/210x15
185,00	215,00	15,00	x		x						X 185/215x15
185,00	215,00	16,00	x								CB 185/215x16
185,00	220,00	15,00	x								CB 185/220x16
185,00	230,00	16,00			x						DB 185/230x16
186,00	215,90	12,00			x						DB 186/215,9x12
186,00	216,00	12,00			x						DB 186/216x12
188,00	215,00	16,00			x						DB 188/215x16
190,00	215,00	15,00		x	x						X 190/215x15
190,00	215,00	16,00	x	x	x						X 190/215x16
190,00	220,00	12,00			x	x					X 190/220x12
190,00	220,00	15,00	x	x	x						X 190/220x15
190,00	220,00	16,00	x		x						X 190/220x16
190,00	225,00	16,00	x	x							X 190/225x16
190,00	230,00	15,00	x			x					X 190/230x15
190,00	230,00	16,00	x	x							X 190/230x16
190,50	215,90	15,75			x						DB 190,5/215,9x15,75
190,50	222,25	15,00			x						DB 190,5-/222,25x15
190,50	228,60	19,05			x						DB 190,5/228,6x19,05
192,00	210,00	10,00	x								CB 192/210x10
193,70	219,10	12,70			x						DB 193,7/219,1x12,7
194,00	222,00	12,00			x						DB 194/222x12
195,00	215,00	15,00		x							CC 195/215x15
195,00	220,00	16,00			x						DB 195/220x16
195,00	230,00	15,00			x						DB 195/230x15
195,00	230,00	16,00			x						DB 195/230x16
196,85	241,30	19,05			x						DB 196,85/241,3x19,05
200,00	225,00	12,50			x						DB 200/225x23,5
200,00	225,00	15,00	x								CB 200/225x15
200,00	230,00	13,00	x	x							X 200/230x13
200,00	230,00	15,00	x	x	x	x					X 200/230x15
200,00	230,00	16,00			x						DB 200/230x16
200,00	230,00	18,00				x					DC 200/230x18
200,00	235,00	15,00	x								CB 200/235x15
200,00	240,00	15,00	x		x		x				X 200/240x15
200,00	240,00	20,00				x					DC 200/240x20
200,00	250,00	15,00	x		x						X 200/250x15
200,00	250,00	16,00	x								CB 200/250x16
203,00	230,00	12,00				x					DC 203/230x12
203,00	230,00	14,00			x						DB 203/230x14
203,20	241,30	19,05			x						DB 203,2/241,3x19,05
203,20	254,00	15,87				x					DC 203,2254x15,87
205,00	230,00	15,00			x						DB 205/230x15
205,00	230,00	16,00	x		x						X 205/230x16
205,00	250,00	16,00			x						DB 205/250x16
207,00	240,00	16,00		x							CC 207/240x16
209,60	235,00	12,70			x						DB 209,6-/235x12,7

Radial Lip seal

Ø d h11	Ø D H8	E +0,3	CB	CC	DB	DC	BB	BC	CC-P	DINA	Part N°.
210,00	230,00	16,00			x						DB 210/230x16
210,00	235,00	12,00			x						DB 210/235x12
210,00	240,00	13,00	x								CB 210/240x13
210,00	240,00	15,00	x	x							X 210/240x15
210,00	240,00	16,00			x						DB 210/240x16
210,00	250,00	15,00	x		x	x					X 210/250x15
210,00	250,00	16,00			x						DB 210/250x16
210,00	250,00	20,00				x					DC 210/250x20
210,00	260,00	15,00	x		x						X 210/260x15
210,00	260,00	25,00			x						DB 210/260x25
210,00	290,00	20,00	x	x							X 210/290x20
214,00	241,50	15,00			x						DB 214/241,5x15
215,00	240,00	12,00	x		x						X 215/240x12
215,00	245,00	16,00			x						DB 215/245x16
215,00	248,00	15,00	x								CB 215/248x15
215,00	250,00	15,00			x						DB 215/250x15
215,00	250,00	16,00			x						DB 215/250x16
215,90	241,30	12,70			x						DB 215,9/241,3x12,7
215,90	247,65	19,05			x						DB 215,9/247,65x19,05
215,90	254,10	14,28		x							CC 215,9/254,1x14,28
215,90	254,10	19,05		x							CC 215,9/254,1x19,05
219,10	244,50	12,70			x						DB 219,1/244,5x12,7
220,00	250,00	12,00	x								CB 220/250x12
220,00	250,00	15,00	x	x	x	x					X 220/250x15
220,00	250,00	16,00	x			x					X 220/250x16
220,00	250,00	18,00				x					DC 220/250x18
220,00	255,00	16,00	x								CB 220/255x16
220,00	255,00	18,00	x								CB 220/255x18
220,00	260,00	15,00	x								CB 220/260x15
220,00	260,00	16,00	x								CB 220/260x16
220,00	260,00	18,00			x						DB 220/260x18
220,00	260,00	22,00			x	x					X 220/260x22
220,00	270,00	15,00			x						DB 220/270x15
220,00	280,00	20,00	x								CB 2200-11-100
225,00	250,00	12,50			x						DB 225/280x20
225,00	250,00	16,00			x						DB 225/250x16
228,60	254,00	19,05			x						DB 228,6/254x19,05
229,00	255,00	15,00			x						DB 229/255x15
230,00	260,00	12,50	x								CB 230/260x12,5
230,00	260,00	15,00	x	x	x						X 230/260x15
230,00	270,00	15,00	x		x						X 230/170x15
230,00	270,00	16,00			x	x					X 230/270x16
230,00	280,00	15,00	x								CB 230/280x15
230,00	280,00	16,00	x		x						X 230/280x16
230,00	285,00	23,00			x						DB 230/285x23
235,00	265,00	15,00	x								CB 235/265x15
235,00	270,00	15,00			x						DB 235/270x15
235,00	270,00	16,00			x						DB 235/270x16
240,00	270,00	15,00	x	x	x	x					X 240/270x15
240,00	270,00	16,00			x						DB 240/270x16
240,00	270,00	18,50							x		CC-P 240/270x18,5
240,00	275,00	16,00	x								CB 240/275x16
240,00	280,00	15,00	x								CB 240/280x15
240,00	280,00	16,00	x		x						CC-P 240/280x16
240,00	280,00	18,50							x		DC 240/280x18,5
240,00	280,00	20,00				x					DB 240/280x20
240,00	290,00	16,00			x						CB 240/290x16
241,30	292,30	25,40	x								DB 241,3/292,3x25,4
241,30	317,70	20,60			x						DB 241,3/317,7x206
245,00	270,00	16,00			x						DB 245/270x16

Radial Lip seal

Ø d h11	Ø D H8	E +0,3	CB	CC	DB	DC	BB	BC	CC-P	DINA	Part N°.
245,00	285,00	16,50			x						DB 245/285x16,5
250,00	280,00	15,00	x	x	x	x					X 250/280x15
250,00	280,00	16,00			x						DB 250/280x16
250,00	285,00	18,00		x							CC 250/285x18
250,00	290,00	15,00			x						DB 250/290x15
250,00	290,00	16,00	x		x						X 250/290x16
250,00	310,00	25,00			x						DB 250/310x25
254,00	279,40	12,70			x						DB 254/279,4x12,7
254,00	292,10	19,05			x						DB 254/292,1x12,7
254,00	304,80	15,88			x						DB 254/304,8x15,88
255,00	290,00	16,00			x						DB 255/290x16
260,00	280,00	16,00			x						DB 260/280x16
260,00	290,00	15,00	x								CB 260/290x15
260,00	290,00	16,00	x		x	x					X 260/290x16
260,00	290,00	20,00			x						X 260/290x20
260,00	300,00	16,00			x						DB 260/300x16
260,00	300,00	20,00	x		x	x					X 260/300x20
260,00	310,00	16,00			x						X 260/310x16
260,00	320,00	25,00			x	x					DB 260/320x25
265,00	290,00	16,00	x		x						X 265/290x16
265,00	300,00	16,00			x						DB 265/300x16
265,00	310,00	16,00			x						DB 265/310x16
266,70	304,80	19,05			x	x					DB 266,7/304,8x19,05
266,70	317,50	15,88			x						X 266,7/317,5x15,88
267,00	300,00	20,00			x						DB 267300x20
267,00	318,00	19,00		x		x					CC 267/318x19
268,00	300,00	16,00			x						DB 268/300x16
270,00	300,00	15,00	x								CB 270/300x15
270,00	310,00	16,00	x		x						X 270/310x16
270,00	330,00	25,00			x						DB 270/330x25
272,00	310,00	16,00			x						DB 272/310x16
275,00	310,00	16,00			x						DB 275/310x16
275,00	320,00	15,00	x								CB 275/320x15
279,40	304,80	12,70			x						DB 279,4/304,8x12,7
279,40	304,80	16,66	x								CB 279,4/304,8x16,66
279,40	330,00	19,05									
280,00	310,00	15,00	x								X 280/310x15
280,00	310,00	16,00	x	x	x	x					X 280/310x16
280,00	315,00	15,00		x							X 280/315x15
280,00	315,00	16,00	x								CB 280/315x16
280,00	316,00	18,00			x						DB 280/316x18
280,00	320,00	15,00	x								CB 280/320x15
280,00	320,00	16,00	x		x	x					X 280/320x16
280,00	320,00	20,00	x	x	x	x					X 280/320x20
280,00	324,00	25,00			x						X 280/324x25
280,00	380,00	20,00			x						DB 280/380x20
280,00	400,00	15,00			x						DB 280/400x20
285,00	310,00	16,00			x						DB 285/310x16
285,00	320,00	16,00			x						DB 285/320x16
285,00	325,00	15,00			x						DB 285/325x15
285,00	325,00	16,00			x						DB 285/325x16
285,00	330,00	20,00			x						DB 285/330x20
285,75	336,55	23,81	x								CB 285,75//336,55x23,81
290,00	320,00	15,00	x								CB 290/320x15
290,00	321,00	19,00	x								CB 290/321x19
290,00	330,00	15,00			x						DB 290/330x15
290,00	330,00	16,00			x						DB 290/330x16
290,00	330,00	18,00	x	x	x						X 290/330x18
290,00	334,00	20,00			x						DB 290/334x20

Radial Lip seal

Ø d h11	Ø D H8	E +0,3	CB	CC	DB	DC	BB	BC	CC-P	DINA	Part N°.
290,00	350,00	25,00			x						DB 290/350x25
295,00	335,00	16,00			x						DB 295/335x16
295,00	335,00	18,00			x						DB 295/335x18
300,00	332,00	16,00	x		x	x					X 300/332x16
300,00	335,00	18,00			x						DB 300/335x18
300,00	340,00	16,00	x		x						X 300/340x16
300,00	340,00	18,00	x	x	x						X 300/340x18
300,00	340,00	20,00	x	x	x	x					X 300/340x20
300,00	342,00	16,00			x						DB 300/342x16
300,00	344,00	20,50			x						DB 300/344x20,5
300,00	350,00	18,00			x						DB 300/350x18
300,00	350,00	19,00			x						DB 300/350x19
300,00	350,00	20,00			x						DB 300/350x20
300,00	360,00	18,00			x						DB 300/360x18
300,00	400,00	18,00			x						DB 300/400x18
300,00	420,00	20,00			x						DB 300/420x20
304,80	330,20	12,70			x						DB 304,8/330,2x12,7
304,80	355,60	25,40			x						DB 304,8/355,6x25,4
305,00	340,00	18,00			x						DB 305/340x18
305,00	345,00	20,00			x						DB 305/345x20
310,00	340,00	15,00		x							CC 310/340x15
310,00	350,00	18,00			x						DB 310/350x18
310,00	350,00	20,00	x								CB 310/350x20
310,00	370,00	28,00			x						DB 310/370x28
315,00	355,00	16,50			x						DB 315/355x16,5
315,00	355,00	18,00			x						DB 315/355x18
315,00	365,00	20,00			x						DB 315/365x20
316,00	360,00	20,00	x								CB 316/360x20
317,10	368,30	18,00		x							CC 317,1/368,3x18
317,50	349,25	19,50			x						DB 317,5/349,25x19,5
320,00	350,00	16,00			x						DB 320/350x16
320,00	350,00	18,00			x						DB 320/350x18
320,00	360,00	15,00			x						DB 320/360x15
320,00	360,00	18,00	x		x	x					X 320/360x18
320,00	360,00	20,00	x		x						X 320/360x20
320,00	360,00	25,00			x						DB 320/360x25
320,00	360,00	32,00			x						DB 320/360x32
320,00	363,00	20,00	x								CB 320/363x20
320,00	380,00	20,00			x						DB 320/380x20
320,00	380,00	25,00			x						DB 320/360x25
325,00	360,00	16,00			x						DB 325/360x16
325,00	365,00	16,00			x						DB 325/365x16
330,00	360,00	15,00			x						DB 330/360x15
330,00	370,00	18,00	x		x	x					X 330/370x18
330,00	370,00	20,00	x		x						X 330/370x20
330,00	380,00	20,00			x						DB 330/380x20
330,00	385,00	18,00			x						DB 330/385x18
330,20	381,00	23,79			x						DB 330,2/381x23,79
340,00	370,00	20,00	x								CB 340/370x20
340,00	372,00	16,00	x		x						X 340/372x16
340,00	380,00	15,00	x								CB 340/380x15
340,00	380,00	16,00			x						DB 340/380x16
340,00	380,00	18,00	x		x						X 340/380x18
340,00	380,00	20,00	x	x	x						X 340/380x20
340,00	390,00	20,00			x						X 340/390x20
340,00	400,00	25,00			x						DB 340/400x25
342,90	368,30	12,70				x					DC 342,9/368,3x12,7
350,00	380,00	15,00	x								X 350/380x15
350,00	380,00	16,00			x						DB 350/380x16

Radial Lip seal

Ø d h11	Ø D H8	E +0,3	CB	CC	DB	DC	BB	BC	CC-P	DINA	Part N°.
350,00	390,00	18,00	x		x	x					X 350/390x18
350,00	390,00	20,00				x					DC 350/390x20
355,00	395,00	32,00			x						DB 355/395x32
355,00	405,00	15,00			x						DB 355/405x15
360,00	390,00	15,00		x							CC 360/39x15
360,00	390,00	20,00			x						DB 360/390x20
360,00	392,00	20,00			x	x					X 360/392x20
360,00	400,00	18,00			x						DB 360/400x18
360,00	400,00	20,00	x		x	x					X 360/400x20
360,00	404,00	20,00	x								CB 360/404x20
360,00	425,00	20,00			x						DB 360/425x20
365,00	395,00	15,00			x						DB 365/395x15
365,00	405,00	18,00			x						DB 365/405x18
365,00	410,00	20,00			x						DB 365/410x20
368,30	406,40	17,45	x								CB 368,3/406,4x17,45
370,00	400,00	10,00			x						DB 370/400x10
370,00	410,00	15,00	x		x						X 370/410x15
370,00	410,00	20,00			x	x					X 370/410x20
370,00	415,00	15,00			x						DB 370/415x15
375,00	420,00	18,00			x						DB 375/420x18
375,00	430,00	18,00			x						DB 375/430x18
380,00	420,00	18,00			x						DB 380/420x18
380,00	420,00	20,00	x	x	x						X 380/420x20
380,00	430,00	19,00			x						DB 380/430x19
381,00	431,80	25,40			x						DB 381/431,8x25,4
381,00	438,15	22,22			x						DB 381/438,15x22,22
385,00	430,00	25,00	x								CB 385/430x25
390,00	425,00	18,00				x					DC 390/425x18
390,00	430,00	16,00	x								CB 390/430x16
390,00	430,00	18,00			x						DB 390/430x18
390,00	430,00	20,00	x								CB 390/430x20
390,00	435,00	18,00				x					DC 390/435x18
390,00	440,00	25,00			x						DB 390/440x25
393,70	444,50	20,57			x						DB 393/444,5x20,57
394,00	420,00	16,00	x	x	x						X 394/420x16
395,00	430,00	15,00			x						DB 395/430x15
395,00	430,00	18,00			x						DB 395/430x18
400,00	430,00	26,00			x						DB 400/430x26
400,00	438,50	17,00			x						DB 400/438,5x17
400,00	440,00	15,00			x						DB 400/440x15
400,00	440,00	18,00			x						DB 400/440x18
400,00	440,00	20,00	x		x						X 400/440x20
400,00	450,00	18,00			x						DB 400/450x18
400,00	450,00	20,00			x						DB 400/450x20
400,00	450,00	25,00				x					DC 400/450x25
400,00	451,00	17,45	x		x						X 400/451x17,45
400,00	470,00	20,00			x						DB 400/470x20
400,00	500,00	25,00			x						DB 400/500x25
404,00	438,00	19,05	x								CB 404/438x19,05
410,00	454,00	20,50			x						DB 410/454x20,5
410,00	460,00	15,00			x						DB 410/460x15
410,00	460,00	22,00			x						DB 410/460x22
420,00	460,00	15,00			x						DB 420/460x15
420,00	460,00	16,00	x								CB 420/460x16
420,00	460,00	18,00	x		x						X 420/460x18
420,00	460,00	20,00	x		x						X 420/460x18
420,00	470,00	20,00		x							CC 420/470x20
420,00	480,00	15,00			x						DB 420/480x15
425,00	475,00	22,00			x						DB 425/475x22
425,00	480,00	15,00			x						DB 425/480x15

Radial Lip seal

Ø d h11	Ø D H8	E +0,3	CB	CC	DB	DC	BB	BC	CC-P	DINA	Part N°.
565,00	630,00	20,00			x						DB 565/630x20
570,00	620,00	22,00			x						DB 570/620x22
570,00	630,00	25,00			x						DB 570/630x25
580,00	615,00	20,00			x						DB 580/615x20
580,00	630,00	20,00			x						DB 580/630x20
580,00	636,00	25,00			x						DB 580/636x25
580,00	640,00	25,00			x						DB 580/640x25
580,00	640,00	30,00			x						DB 580/640x30
590,50	628,60	15,87			x						DB 590,5/628,6x15,87
595,00	635,00	20,00			x						DB 595/635x20
600,00	640,00	20,00	x		x						X 600/640x20
600,00	640,00	22,00			x	x					X 600/640x22
600,00	650,00	25,00			x						DB 600/650x25
609,60	660,40	22,23			x						DB 609,6660,4x22,23
610,00	650,00	20,00			x						DB 610/650x20
610,00	660,00	20,00			x						DB 610/660x20
620,00	660,00	20,00			x						DB 620/660x20
620,00	670,00	25,00			x						DB 620/670x25
620,00	680,00	25,00			x						DB 620/680x25
628,00	655,00	20,00			x						DB 628/655x20
630,00	670,00	20,00			x						DB 630/670x20
630,00	680,00	20,00			x						DB 630/680x20
630,00	690,00	30,00			x						DB 630/690x30
630,00	700,00	20,00			x						DB 630/700x20
632,00	672,00	20,00			x						DB 632/672x20
640,00	680,00	20,00			x						DB 640/680x20
640,00	690,00	25,00			x						DB 640/690x25
645,00	677,00	16,00			x						DB 645/677x16
650,00	690,00	18,00			x						DB 650/690x18
650,00	690,00	20,00			x						DB 650/690x20
650,00	700,00	20,00			x						DB 650/700x20
650,00	710,00	25,00			x						DB 650/710x25
660,00	700,00	18,00			x						DB 660/700x18
660,00	704,00	20,50			x						DB 660/704x20
670,00	710,00	20,00	x		x						X 670/710x20
670,00	730,00	25,00	x		x						X 670/730x25
695,00	740,00	20,00			x						DB 695/740x20
700,00	740,00	20,00			x						DB 700/740x20
710,00	760,00	20,00			x						DB 710/760x20
740,00	780,00	20,00			x						DB 740/780x20
750,00	790,00	23,00			x						DB 750/790x23
750,00	800,00	25,00			x						DB 750/800x25
790,00	830,00	23,00			x						DB 790/830x23
840,00	880,00	20,00			x						DB 840/880x20
850,90	914,40	22,20			x						DB 850,9/914,4x22,2
860,00	900,00	20,00			x						DB 860/900x20
950,00	1000,00	20,00			x						DB 950/1000x20

Radial Lip seal

Example for ordering other material except NBR:

CB 30 / 62 x 7 - F

Type
Nominal diameter d
Housing diameter D
Groove width E
Material designator

Material Key:

Profile overview
CB - Form A
CC - Form AS
DB - Form C
DC - Form CS
BB - Form B
BC - Form BS
CC-P - Form P
DINA - Form O

When ordering, NBR is the standard material. Order as following:
CB 10/22x6
If order FPM or silicone see example beside.

Material overview
NBR is standard material
F - FPM
S - Silicone

WARNING: Limits of application stated herein are standard values. They could be individually transgressed with due consideration to respective service conditions. In the event of a large duty cycle, pulsating operation and other complex operational conditions, simultaneous transgression of these values is not recommended. Due to a large variety of service conditions that may arise in course of actual use, the company does not take responsibility of or guarantee the functional accuracy of the individual components. Rights for changes are reserved.

Food/Medical

Wind Power

Automotive

Industrial

Offshore

Topstykket 21-23
DK-3460 Birkerød
Phone: +45 49 11 00 30
www.accofluor.com